2017 WOODLYNN AVENUE, MAPLEWOOD, MN 55109

PROJECT SCOPE

INTERIOR BUILD OUT OF AN EXISTING MERCANTILE SPACE INTO A DOG DAYCARE. DAYCARE CENTER WILL PROVIDE OVER-NIGHT BOARDING OF DOGS, CLASSIFYING THIS AS A "KENNEL" (BUSINESS).
INTERIOR IMPROVEMENTS INCLUDE A RECEPTION AREA, RESTROOMS, BREAK ROOM, (3) DOG PLAY ROOMS, AN EVALUATION ROOM AND UTILITY CLOSET FOR EACH PLAYROOM, DOG SPA BATHING ROOM AND LAUNDRY ROOM.

PARKING ANALYSIS: EXISTING SHARED PARKING PROVIDED BY STRIP CENTER PARKING LOT.

EXTERIOR FENCED-IN OUTDOOR PLAY AREA TO BE ADDED ALONG THE NORTH SIDE OF THE BUILDING APPROX. 1,000 S.F. UNDER SEPARATE PERMIT.

DEFERRED SUBMITTALS

- EXTERIOR SIGNAGE
- AUTOMATIC SPRINKLER SYSTEM MODIFICATIONS
- FIRE ALARM SYSTEM MODIFICATIONS

LIFE SAFETY SUMMARY

THE SPACE IS FULLY SPRINKLERED. THE SPRINKLER RISER IS LOCATED INSIDE THE LANDLORD ROOM AT THE NORTHEAST CORNER OF THE BUILDING.

FIRE ALARM IS REQUIRED. G.C. TO SUPPLY AND INSTALL FIRE ALARM SYSTEM. G.C. TO COORDINATE MONITORING REQUIREMENTS WITH THE LANDLORD, ADA, AND LOCAL AUTHORITY HAVING JURISDICTION.

FIRE ALARM NOTES

NOTE: FIRE ALARM VENDOR SHALL CLEARLY LABEL THE FIRE ALARM CONTROL PANEL IN THE FIELD.

APPROVED PANELS:
FIRE-LITE
MODEL #'S MS5, MS10, MS9050, AND MS9200

SILENT KNIGHT
MODEL #'S SK5600, SK5700, SK5808, SK5820, SK5208, AND SK-4.

NOTE: FIRE ALARM MONITORING IS VIA HARD PHONE LINE.

PROJECT DIRECTORY

DOGTOPIA CONTACT		
DOGTOPIA SUPPORT OFFICE 6245 NORTH 24TH PARKWAY, SUITE 210 PHOENIX, AZ 85016 CONTACT: AARON MUELLER DIRECTOR OF DESIGN & CONSTRUCTION		
BLDG. DEPT. CONTACT		**ARCHITECT CONTACT**
MAPLEWOOD BUILDING DEPARTMENT 1902 COUNTY ROAD B. E. MAPLEWOOD, MN 55109		ADA ARCHITECTS, INC. 17710 DETROIT AVE. CLEVELAND, OH 44107 CLIENT MANAGER: MELISSA SCHLOSSER PROJECT MANAGER: DAN WISE T: (216) 521-5134 F: (216) 521-4824 EMAIL: mschlosser@adaarchitects.cc EMAIL: dwise@adaarchitects.cc

BIDDING NOTES

1. CONTRACTOR SHALL CONTACT ARCHITECT FOR THE OFFICIAL DOGTOPIA BID PACKAGE.
2. ALL OF THE SUBCONTRACTORS QUOTING ON THEIR SPECIFIC SCOPE OF WORK/SERVICES TO CONTACT THE LOCAL BUILDING DEPARTMENT/AGENCY TO DISCUSS CODE ISSUES / IDIOSYNCRASIES REGARDING THEIR SERVICES AND THE QUOTE ASSOCIATED WITH THE SERVICES TO THE GENERAL CONTRACTOR, WHETHER WORKING FOR THE LANDLORD OR THE TENANT, FOR THIS PROJECT. THIS CONTRACTOR TO BE FAMILIAR WITH THE SITE WHERE SUCH SERVICES/WORK WILL BE PERFORMED, THIS SPECIFIC USE AND THE IDIOSYNCRASIES ASSOCIATED WITH THE LIFE, SAFETY AND HEALTH ASSOCIATED WITH THIS WORK AND TO INDICATE ON THE QUOTE ANY ITEMS REQUIRED THAT ARE NOT NECESSARILY SHOWN ON THE DRAWINGS/SPECIFICATIONS.
3. BOTH THE LANDLORD AND THE TENANT'S GENERAL CONTRACTOR ARE REQUIRED TO HAVE ALL SUBCONTRACTORS REVIEW THESE NOTES PRIOR TO BIDDING AND TO FAMILIARIZE ALL PERSONS AND SUBCONTRACTORS WORKING ON THIS PROJECT WITH THESE GENERAL NOTES AND THE CONTRACT DOCUMENTS NOTED, LANDLORD'S DESIGN CRITERIA (IF APPLICABLE) AND THE EXECUTED LEASE AGREEMENT BETWEEN LANDLORD AND TENANT. ANY DISCREPANCY BETWEEN THESE CONTRACT DOCUMENTS AND THE LEASE OR DESIGN CRITERIA INFORMATION IS TO BE REPORTED TO TENANT'S ARCHITECT PRIOR TO THE START OF ANY WORK. BOTH GENERAL CONTRACTORS SHALL BE RESPONSIBLE FOR FULLY ACQUAINTING THEMSELVES WITH THE CONTENT AND SCOPE OF THESE DOCUMENTS. WORK DECLARED UNACCEPTABLE BY THE TENANT AND LANDLORD SHALL BE CORRECTED IN A MANNER AND TO A DEGREE OF QUALITY AS ACCEPTABLE BY THE TENANT AND LANDLORD.

VENDOR LIST

RUBBER FLOORING		LVT
ON DECK SPORTS CONTACT: NICOLE OULETTE T: (508) 408-4573 EMAIL: nicole@ondecksports.com PRAETORIAN FORTIUS SEALER (REQUIRED) CONTACT: DEAN JACOBSON T: (952) 895-6962 EMAIL: sales@goppf.com		MODERN SURFACE CONTACT: LOUIS ZANINE T: (602) 451-2063 EMAIL: louis.zanine@modernsurface.com
OUTDOOR TURF	**POTTY PLATFORM TURF**	**TILE**
ON DECK SPORTS CONTACT: NICOLE OULETTE T: (508) 408-4573 EMAIL: nicole@ondecksports.com	FOREVER LAWN CONTACT: MATT KOVACIC T: (330) 499-8873 EMAIL: matt@foreverlawn.com	DALTILE CONTACT: ALLISON BIRKMEYER T: (704) 989-3211 EMAIL: allison.birkmeyer@daltile.com
FENCE	**CEILING TILE**	**FRP**
WEATHERABLES CONTACT: MIKE CAVELL T: (888) 743-3673 / (614) 345-0426 F: (614) 771-4806 EMAIL: MCavell@weatherables.com	ARMSTRONG T: 1 (800) 442-4212 ACCOUNT NAME: DOGTOPIA	CRANE COMPOSITES CONTACT: JEFF TOLLE T: (815) 274-9125 EMAIL: jtolle@cranecomposites.com
SUITES	**MILLWORK**	**DOG TUBS**
SNYDER MANUFACTURING CO. CONTACT: RALPH IHDE T: (800) 631-4101 (EXT. 30) EMAIL: rihde@snydermfg.com	WILSON ART CONTACT: DEBBIE DAMMEN T: (303) 809-9673 EMAIL: dammend@wilsonart.com	DOGTUBS.COM CONTACT: ANTHONY KENDALL T: (253) 797-3304 EMAIL: anthony.kendall@dogtubs.com
RESTROOM ACCESSORIES	**HVAC UV LIGHT**	**FIXTURES**
BOBRICK WASHROOM T: (877) 423-6555	STERIL-AIRE CONTACT: KARL OELKER T: (612) 859-4242 EMAIL: koelker@steril-aire.com	GLOBAL INDUSTRIES
HVAC		
DAIKIN CONTACT: GEOFF CORNWELL CONTACT: MIKE PEREZ T: (208) 465-5700 SALES@NORBRYHN.COM		

NOTE: SUBSTITUTE PRODUCTS -OR- ALTERNATES TO THOSE SPECIFIED ON PLANS WILL **NOT** BE ACCEPTED.

OWNER PROVIDED ITEMS

ITEMS NOT NOTED BELOW ARE PROVIDED AND INSTALLED BY G.C.

ITEM	INSTALLED BY		
EQUIPMENT			
CHEMICAL MIXING UNITS	GC		
HYDRAULIC GROOMING TABLE	GC		
NEST CAMERAS			VENDOR
OFFICE SAFE	GC		
GROOMING KENNELS	GC		
SECURITY MONITOR		OWNER	
WEB CAM MONITOR		OWNER	
DIGITAL MENU SCREEN			VENDOR
WALL MOUNTED DISPLAY MONITOR			VENDOR
GUMBALL "BISCUIT" DISTRIBUTOR AND MOUNT	GC		
THROUGH-WALL CRATE	GC		
FURNITURE			
PLAYROOM DOG CRATES		OWNER	
MANAGER DESK		OWNER	
MANAGER CHAIR		OWNER	
RECEPTION CHAIRS		OWNER	
LOCKERS		OWNER	
SIGNAGE			
WALL GRAPHICS			VENDOR
WINDOW FILM WITH GRAPHICS			VENDOR
EXTERIOR "DOGTOPIA" BUILDING SIGNAGE			VENDOR

CONTRACTOR TO PROVIDE A 20' SECURE STORAGE CONTAINER (CONEX BOX) AT THE JOBSITE FOR THE DURATION OF THE PROJECT, SEE SHEET A.02

CODE AND BUILDING DATA

APPLICABLE CODES:

BUILDING CODE:	2015 MINNESOTA BUILDING CODE
MECHANICAL CODE:	2012 IMC
PLUMBING CODE:	2015 MINNESOTA PLUMBING CODE
ELECTRICAL CODE:	2014 NEC
FIRE CODE:	2012 IFC
ENERGY CODE:	2015 MINNESOTA ENERGY CODE
ACCESSIBILITY:	2015 MINNESOTA ACCESSIBILITY CODE

USE and OCCUPANCY CLASSIFICATION:

B - BUSINESS

CONSTRUCTION CLASSIFICATION (TYPE):

IIB - FULLY SPRINKLERED
FIRE-RESISTANCE RATING REQUIREMENTS FOR BUILDING ELEMENTS (HOURS):

STRUCTURAL FRAME:	0 HOURS	INTERIOR NONBEARING WALLS:	0 HOURS
EXTERIOR BEARING WALLS:	0 HOURS	FLOOR CONSTRUCTION:	0 HOURS
INTERIOR BEARING WALLS / COLUMNS:	0 HOURS	ROOF CONSTRUCTION:	0 HOURS

ALLOWABLE HEIGHT and BUILDING AREAS:

ALLOWABLE AREA:	92,000 SQ. FT.
GROSS LEASED AREA:	5,410 SQ. FT.
ALLOWABLE HEIGHT:	75'-0"
ACTUAL HEIGHT:	+/- 28'-1 1/2"

OCCUPANT LOAD:

ACTUAL INTERIOR AREA BUILDING / OCC: 5,410 SQ. FT. / 100 GROSS = 55 OCCUPANTS

ANTICIPATED AVERAGE OCCUPANT LOAD FOR DOGTOPIA: 14 FROM HISTORICAL DATA

EGRESS REQUIREMENTS:

REQUIRED EGRESS WIDTH:	55 OCC. x 0.20 = 11" (32" MIN)
PROVIDED EGRESS WIDTH:	36" + 36" + 36" + 36" = 144"
REQUIRED EXIT ACCESS TRAVEL DISTANCE:	300' MAX
PROVIDED EXIT ACCESS TRAVEL DISTANCE:	LESS THAN 300'
MIN. NUMBER OF EXITS REQUIRED / PROVIDED	2 EXITS REQUIRED / 4 EXITS PROVIDED

PLUMBING FIXTURE REQUIREMENTS:

PLUMBING FIXTURE	CALCULATION	REQUIRED	PROVIDED
WATER CLOSETS, MEN:	1 PER 25 OCC. FOR FIRST 50, 1 PER 50 FOR REMAINDER	1	1
WATER CLOSETS, WOMEN:	1 PER 25 OCC. FOR FIRST 50, 1 PER 50 FOR REMAINDER	1	1
LAVATORIES, MEN:	1 PER 40 OCC. FOR FIRST 80, 1 PER 80 FOR REMAINDER	1	1
LAVATORIES, WOMEN:	1 PER 40 OCC. FOR FIRST 80, 1 PER 80 FOR REMAINDER	1	1

HISTORICALLY WE DO NOT EXPECT TO EXCEED 14 PEOPLE.

CODE NOTES

1. ALL FINISHES TO BE AS NOTED AND SHALL NOT HAVE SMOKE DEVELOPED RATINGS GREATER THAN 450.
2. INTERIOR FINISHES OF WALLS AND CEILINGS IN ALL ROOMS OR ENCLOSED SPACES SHALL HAVE A CLASS C FLAME SPREAD INDEX 76-200; SMOKE DEVELOPED INDEX 0-450. INTERIOR FINISHES OF EXIT ENCLOSURES AND EXIT PASSAGEWAYS SHALL HAVE A CLASS B FLAME SPREAD INDEX 26-75; SMOKE DEVELOPED INDEX 0-450. ASTM E 84. IFC TABLE 803.3.
3. MATERIALS USED AS INTERIOR TRIM SHALL HAVE A MINIMUM CLASS C FLAME SPREAD AND SMOKE DEVELOPED INDEX AND SHALL COMPLY WITH ASTM E 84. COMBUSTIBLE TRIM SHALL NOT EXCEED 10% OF THE AGGREGATE WALL OR CLG. ARE IN WHICH IT IS LOCATED. IFC 804
4. INTERIOR WALL AND CEILING FINISHES SHALL COMPLY WITH NFPA 286 TESTING MEASURES. INTERIOR FLOOR FINISHES SHALL COMPLY WITH NFPA 253 WITH A CLASS 2 CRITICAL RADIANT FLUX > 0.22 WATTS / CM2. FLOOR FINISHES IN EXIT / ACCESS CORRIDORS SHALL BE CLASS 1 CRITICAL RADIANT FLUX > 0.45 WATTS / CM2.
5. INTERIOR FINISH MATERIALS SHALL BE APPLIED SO THAT THEY WILL NOT BECOME READILY DETACHED WHERE SUBJECTED TO 200 DEGREES F. FOR NOT LESS THAN 30 MINUTES. IFC 803.2.
6. THE REQUIRED FLAME SPREAD OR SMOKE DEVELOPED INDEX OF SURFACES IN EXISTING BUILDINGS MAY BE ACHIEVED BY APPLICATION OF APPROVED FIRE RETARDANT COATINGS AND SHALL COMPLY WIHT NFPA 703. IFC 803.4.
7. FIRE EXTINGUISHERS SHALL BE LOCATED AT THE DIRECTION OF THE FIRE DEPARTMENT, PROVIDED & INSTALLED BY GENERAL CONTRACTOR.

LIST OF DRAWINGS

SHEET NO.	DRAWING NAME	ISSUE DATE	REVISION DATE
	PROJECT ORIENTATION		
A0.0	COVER SHEET	03/23/20	
	SITE		
AS1.0	ARCHITECTURAL SITE PLAN	03/23/20	
	DEMOLITION		
D1.0	DEMOLITION PLAN	03/23/20	
	ARCHITECTURAL		
A0.2	GENERAL NOTES	03/23/20	
A1.1	FLOOR PLAN	03/23/20	
A1.2	FIXTURE PLAN	03/23/20	
A1.3	FINISH PLAN	03/23/20	
A2.0	REFLECTED CEILING PLAN	03/23/20	
A3.0	EXTERIOR ELEVATIONS	03/23/20	
A4.0	WALL TYPES	03/23/20	
A4.1	RESTROOM DETAILS	03/23/20	
A4.2	SPA / LAUNDRY DETAILS	03/23/20	
A4.3	BREAK ROOM DETAILS	03/23/20	
A4.4	LOBBY DETAILS	03/23/20	
A5.0	DOOR SCHEDULE AND DETAILS	03/23/20	
	STRUCTURAL		
S1.0	GENERAL STRUCTURAL NOTES	03/23/20	
S2.0	PARTIAL ROOF FRAMING PLAN	03/23/20	
S3.0	FRAMING DETAILS	03/23/20	
	MECHANICAL		
M1.0	MECHANICAL DEMOLITION PLAN	03/23/20	
M1.1	MECHANICAL NEW PLAN	03/23/20	
M2.0	MECHANICAL SCHEDULES	03/23/20	
M3.0	MECHANICAL DETAILS	03/23/20	
M3.1	MECHANICAL DETAILS	03/23/20	
M4.0	MECHANICAL ENERGY CODE COMPLIANCE FORMS	03/23/20	
M5.0	MECHANICAL SPECIFICATIONS	03/23/20	
	PLUMBING		
PD1.0	PLUMBING DEMO PLAN	03/23/20	
P1.0	WASTE AND VENT PLAN	03/23/20	
P2.0	WATER AND GAS PLAN	03/23/20	
P3.0	PLUMBING DETAILS	03/23/20	
P3.1	PLUMBING SCHEDULES	03/23/20	
P4.0	PLUMBING SPECIFICATIONS	03/23/20	
P4.1	PLUMBING SPECIFICATIONS	03/23/20	
FP1.0	FIRE PROTECTION REFERENCE PLAN	03/23/20	
	ELECTRICAL		
E0.1	ELECTRICAL SPECIFICATIONS	03/23/20	
E0.2	ELECTRICAL SPECIFICATIONS	03/23/20	
E1.0	POWER PLAN	03/23/20	
E1.1	LIGHTING PLAN	03/23/20	
E2.0	ONE LINE DIAGRAM & DETAILS	03/23/20	
E2.1	LIGHTING AND PANEL SCHEDULES	03/23/20	

SITE VICINITY MAP

PROJECT LOCATION

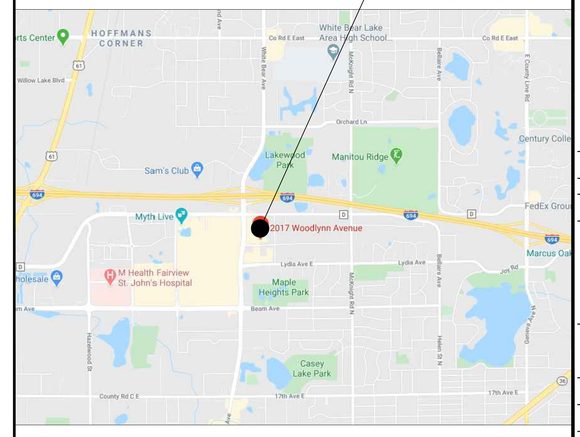

N

SITE VICINITY MAP
SCALE = NTS

KURT L. SCHMITZ
LICENSED ARCHITECT
No. 51649
MINNESOTA

ADA ARCHITECTS, INC.
17710 Detroit Avenue Lakewood, Ohio 44107
Phone (216) 521-5134 Fax (216) 521-4824
www.adaarchitects.cc

dogtopia

DOGTOPIA

MAPLEWOOD, MN 55109

2017 WOODLYNN AVENUE

This document ("Instrument of Service") was prepared by ADA Architects, Inc. ("ADA") specifically for the referenced project and is not intended for any other use. ADA retains all common law, statutory and other reserved rights, including copyrights. This Instrument of Service shall not be used on other projects, for additions to this project or for completion of this project by others without ADA's prior written consent. Any unauthorized use of this Instrument of Service shall be at the User's sole risk and without liability to ADA. ADA makes no warranties, express or implied, of merchantability or of fitness for a particular purpose.

FRANCHISEE
LANG, BERT LLC

REVISIONS

#	DATE	TYPE
1		
2		
3		
4		
5		

COVER SHEET

DATE 03/23/20

JOB NO. 19492

A0.0

SHEET NO.

GENERAL NOTES

1. SITE MODIFICATIONS ARE LIMITED TO OUTDOOR PLAY. NO OTHER EXTERIOR WORK PROPOSED.

⬡ KEY NOTES

100. LOCATION OF LEASE LINE
101. NOT USED.
102. MAIN ENTRY DOORS, SEE SHEET A1.1 FOR ADDITIONAL INFORMATION.
103. ACCESSIBLE PATH OF TRAVEL.
104. EXISTING CONCRETE SIDEWALK.
105. EXISTING PARKING STRIPING.
106. EXISTING CONCRETE RAMP.
107. NOT USED.
108. EXISTING PYLON SIGN. NEW SIGN INSERTS UNDER SEPARATE PERMIT.

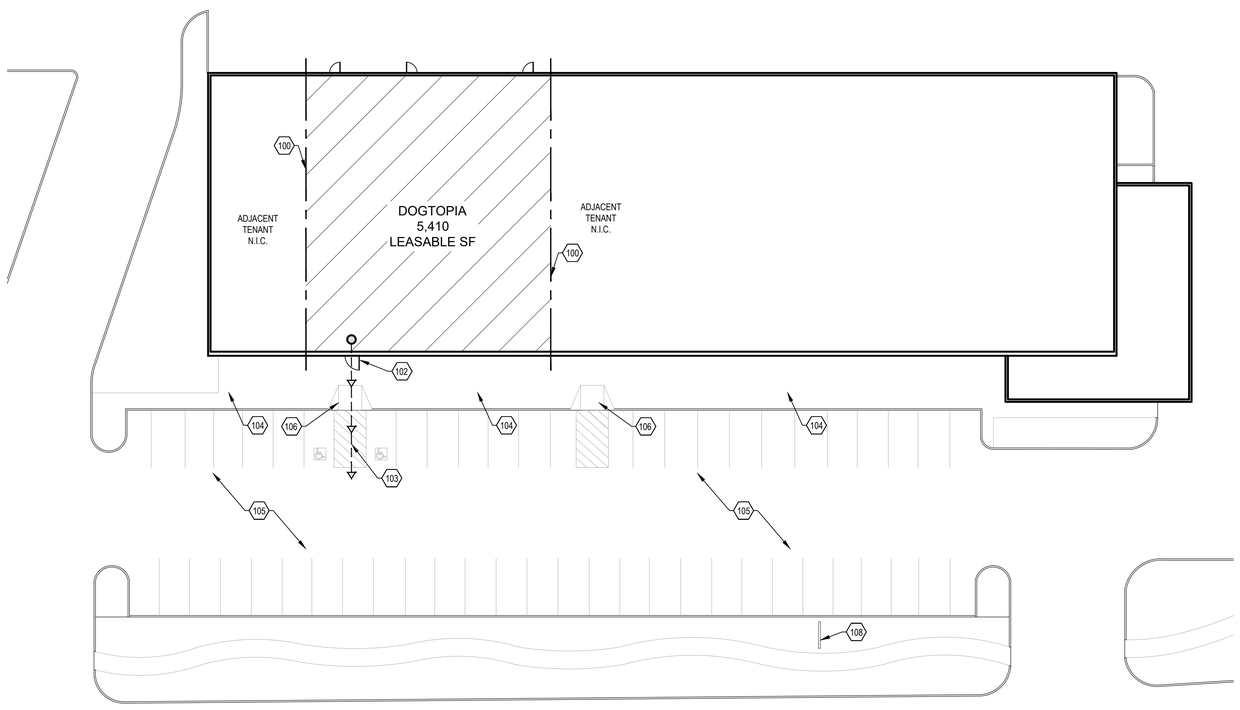

N

ARCHITECTURAL EXTERIOR PLAN

SCALE: 1" = 20'

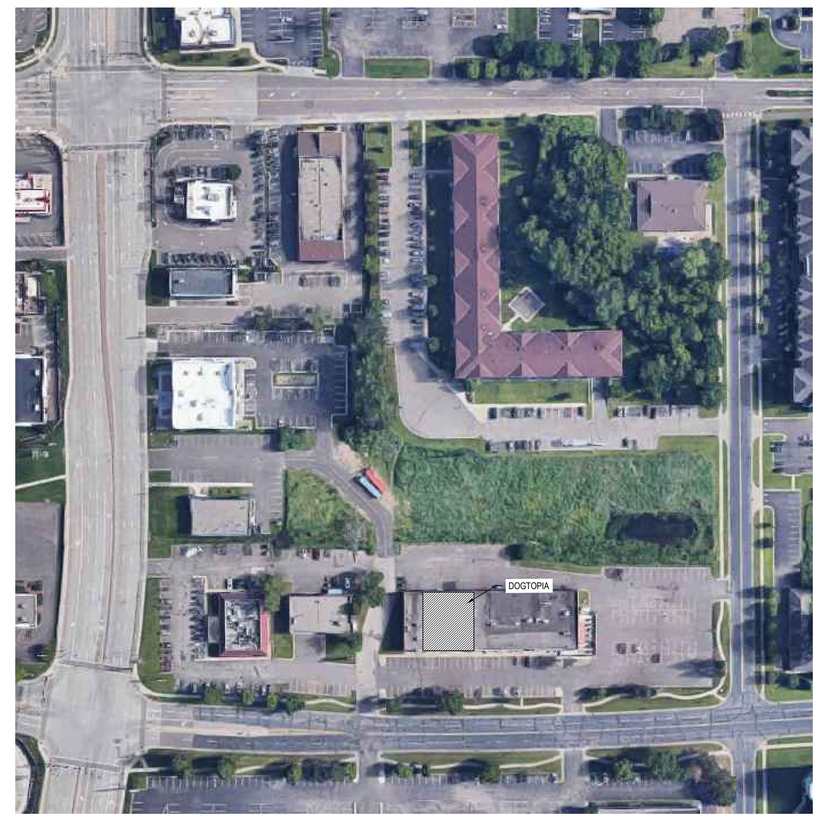

N

OVERALL SITE PLAN

NOT TO SCALE

TRUE NORTH

KURT L. SCHMITZ
LICENSED ARCHITECT
No.51649
MINN.

ADA ARCHITECTS, INC.
17710 Detroit Avenue Lakewood, Ohio 44107
Phone (216) 521-5134 Fax (216) 521-4824
www.adaarchitects.cc

dogtopia

DOGTOPIA

2017 WOODLYNN AVENUE

MAPLEWOOD, MN 55109

This document ("Instrument of Service") was prepared by ADA Architects, Inc. ("ADA") specifically for the referenced project and is not intended for any other use. ADA retains all common law, statutory and other reserved rights, including copyrights. This Instrument of Service shall not be used on other projects, for additions to this project or for completion of this project by others without ADA's prior written consent. Any unauthorized use of this Instrument of Service shall be at the User's sole risk and without liability to ADA. ADA makes no warranties, express or implied, of merchantability or of fitness for a particular purpose.

FRANCHISEE

LANG, BERT LLC

REVISIONS

#	DATE	TYPE
1		
2		
3		
4		
5		

ARCHITECTURAL SITE PLAN

DATE 03/23/20

JOB NO. 19492

AS1.0

SHEET NO.

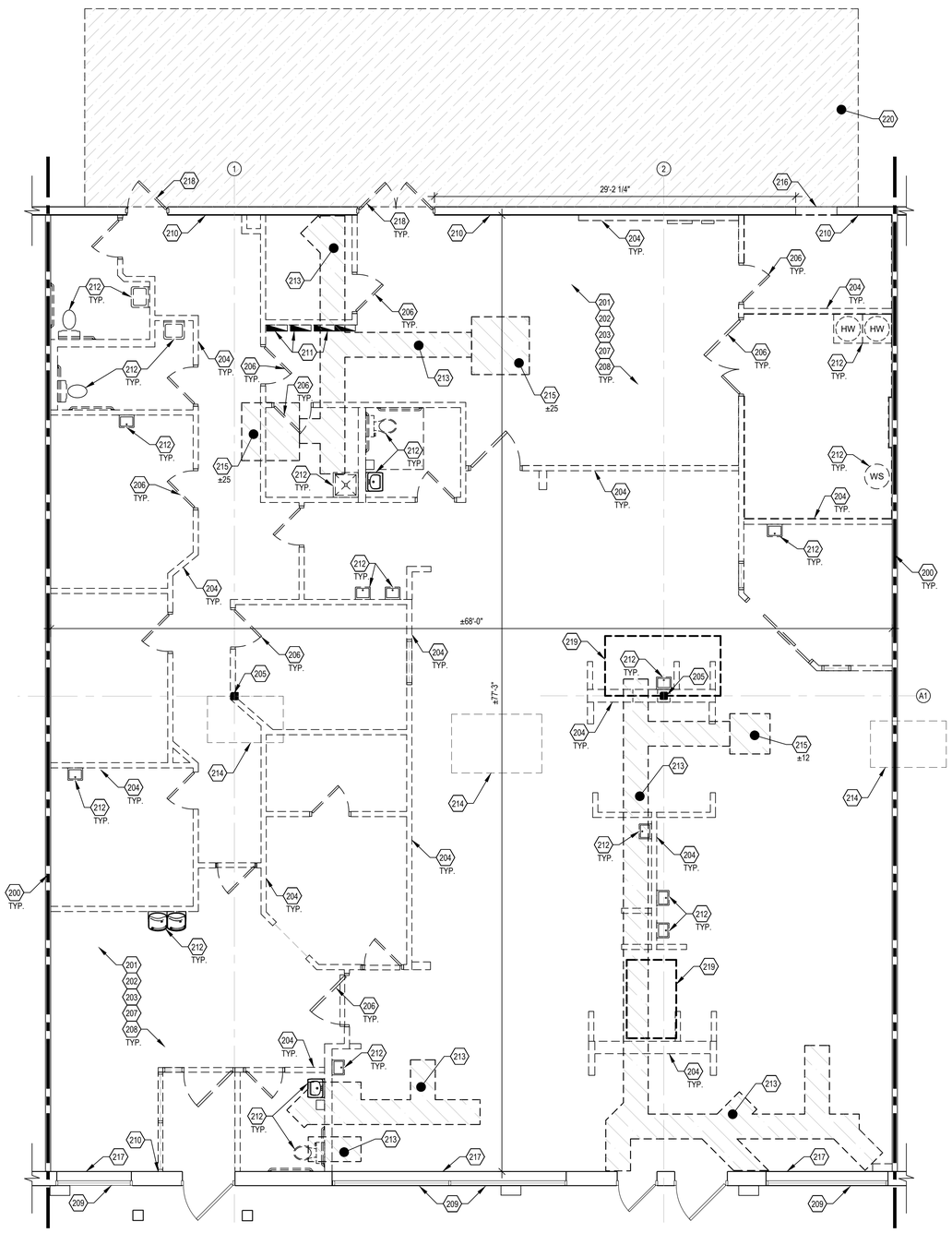

N

DEMOLITION PLAN

SCALE 3/16" = 1'-0"

DEMO LEGEND

SYMBOL	DESCRIPTION
	EXISTING WALLS
	EXISTING WALLS TO BE REMOVED
	EXISTING CONCRETE SLAB. TO BE REMOVED
	EXISTING ASPHALT PAVEMENT. TO BE REMOVED

GENERAL DEMOLITION NOTES

1. THE GENERAL CONTRACTOR SHALL BE RESPONSIBLE FOR VERIFYING ALL EXISTING FIELD CONDITIONS SO AS TO BECOME FAMILIARIZED WITH THE DEMOLITION AND / OR REMOVAL WORK WHICH MAY BE REQUIRED TO PRODUCE RESULTS INTENDED IN THE CONTRACT DOCUMENTS. THE SCOPE OF WORK DESCRIBED IN THE CONTRACT DOCUMENTS ANTICIPATES THE DEMOLITION OF EXISTING CONSTRUCTION IN PART OR ITS ENTIRETY, AND THE REMOVAL, RELOCATION AND RE-POWERING OF CERTAIN CONSTRUCTION MATERIALS AND EQUIPMENT, INCLUDING ITEMS RELATED TO OTHER TENANTS WHICH MAY PASS THROUGH OR OCCUPY THIS TENANT'S SPACE. IT IS THE INTENT THAT EACH PORTION OF THE DEMOLITION AND REMODELING WORK BE DONE BY THE SPECIFIC TRADE INVOLVED IN THE INITIAL INSTALLATION, (ie: CARPENTRY WORK BY THE CARPENTRY TRADE, MECHANICAL AND ELECTRICAL WORK BY THE MECHANICAL AND ELECTRICAL TRADES ETC.). THEREFORE, EACH CONTRACTOR AND SUBCONTRACTOR SHALL THOROUGHLY EXAMINE THE PROPOSED WORK AND MAKE ALLOWANCES IN HIS OR HER PROPOSAL FOR THE COST OF ALL DEMOLITION AND/OR REMOVAL WHICH MAY BE REQUIRED TO PRODUCE THE END RESULTS INTENDED BY THE CONTRACT DOCUMENTS.
2. GENERAL CONTRACTOR TO COMPLETE ALL DEMOLITION AS NOTED IN CONTRACT DOCUMENTS AND REMOVE ALL DEBRIS AND RUBBISH FROM THE PROJECT AND BUILDING SITE.
3. ALL AREAS WHERE DEMOLITION IS TO OCCUR TO BE SECTIONED OFF FROM THE PUBLIC AND ALL REQUIRED SHORING BARRICADING, AND SCAFFOLDING TO BE THE RESPONSIBILITY OF THE GENERAL CONTRACTOR.
4. ALL WORK TO BE IN ACCORDANCE WITH O.S.H.A. REQUIREMENTS.
5. ALL RUBBISH AND DEBRIS TO BE REMOVED FROM THE PROJECT SITE WITHIN A 24 HOUR PERIOD OR PLACED IN PRE-APPROVED DUMPSTER LOCATIONS FOR REMOVAL OR DUMPSTER CHANGE OUT DAILY; CONTRACTOR TO RECEIVE APPROVAL OF DUMPSTER LOCATION FROM BUILDING LANDLORD REPRESENTATIVE.
6. GENERAL CONTRACTOR TO CONTACT BUILDING LANDLORD REPRESENTATIVE AND ALL UTILITY COMPANY REPRESENTATIVES HAVING JURISDICTION OVER THIS PROJECT TO ASCERTAIN BUILDING AND UTILITY COMPANY LINES ABOVE, WITHIN, OR BELOW PREMISES TO AVOID ANY POSSIBILITIES OF CUTTING SUCH LINES, CAUSING EXPLOSIONS, ETC.
7. GENERAL CONTRACTOR IS RESPONSIBLE FOR THE CORE DRILL OF CONCRETE SLAB AT ALL AREAS WHERE UNDER SLAB MECHANICAL, PLUMBING AND ELECTRICAL WORK OCCURS. REVIEW AND COORDINATE EXACT LOCATIONS AND SIZES WITH THE MECHANICAL, ELECTRICAL AND PLUMBING DRAWINGS. NOTE: DO NOT CUT SLAB WITHOUT WRITTEN APPROVAL FROM LANDLORD.
8. ALL WORK TO BE COMPLETED FOLLOWING LANDLORD'S CONSTRUCTION "RULES AND REGULATIONS".
9. DEMOLITION OR DEMOLITION REMOVAL TO BE COMPLETED IN A MANNER THAT DOES NOT DISTURB ADJACENT TENANTS OR DISRUPT THE OPERATION OF ADJACENT TENANTS.
10. PROTECTION OF ADJACENT TENANTS OR SPACES IS REQUIRED PRIOR TO DEMOLITION.
11. ALL CUTTING OF SERVICES OR UTILITIES AFFECTING THE BUILDING COMPLEX OR ADJACENT TENANTS INCLUDING SPRINKLER OPERATION TO BE COMPLETED ON "OFF HOURS". COORDINATE ALL SHUT DOWNS WITH LANDLORD. A 48 HOUR NOTICE REQUIRED.
12. REFER TO ELECTRICAL DRAWINGS FOR ELECTRICAL DEMOLITION.
13. REFER TO MECHANICAL / PLUMBING DRAWINGS FOR MECHANICAL / PLUMBING DEMOLITION.
14. DEMOLITION WORK TO BE PHASED TO ALLOW PROPER EGRESS FOR ANY PERSON IN CASE OF FIRE OR HAZARD AND NO DEMOLITION WORK CAN OCCUR IF THE WORK JEOPARDIZES A MEANS OF EGRESS FOR THE PUBLIC OR PROJECT EMPLOYEES.
15. ALL FLOORING MATERIALS TO BE REMOVED, UNLESS NOTED OTHERWISE.
16. ALL LABOR TO BE COMPATIBLE WITH OTHER LABOR COMPLETING WORK IN THE BUILDING
17. ANY LANDLORD COMPONENT THAT IS EXISTING IN THE SPACE MUST REMAIN VISIBLE AND ACCESSIBLE TO THE LANDLORD. (DUCTWORK, CLEANOUTS, ETC.) LABEL CLEARLY IN TENANT SPACE; PROVIDE ACCESS PANELS.
18. CONSTRUCTION MAY ATTACH TO BUILDING STRUCTURE ONLY - (NO ATTACHMENT TO ROOF DECK, LATERAL BRIDGING, CONDUITS, DUCTWORK, ETC., IS ALLOWED) FOR STABILITY.
19. ALL EXISTING CONSTRUCTION NOT SCHEDULED FOR RE-USE OR NOTED TO BE ABANDONED IN PLACE MUST BE COMPLETELY DEMOLISHED AND PROPERLY DISPOSED OF OFF SITE. ALL UTILITIES MUST BE REMOVED TO THEIR POINT OF ORIGIN.

⬡ KEY NOTES

200. LOCATION OF LEASE LINE.
201. REMOVE ALL EXISTING FLOORING RESIDUE. PATCH AND REPAIR ANY DAMAGED SECTION OF CONCRETE SLAB. PREPARE SLAB TO RECEIVE SCHEDULED FINISHES (TYPICAL THROUGHOUT SPACE).
202. ALL DIMENSIONS TO BE FIELD VERIFIED AFTER DEMOLITION HAS BEEN COMPLETED. NOTIFY ARCHITECTURAL PROJECT MANAGER IMMEDIATELY OF ANY DISCREPANCIES. G.C. IS REQUIRED TO VISIT PROJECT SITE AND VERIFY ALL EXISTING CONDITIONS PRIOR TO BID.
203. REMOVE ABANDONED ELECTRICAL EQUIPMENT NOT TO BE RE-USED, INCLUDING BUT NOT LIMITED TO, JUNCTION BOXES, CONDUIT, WIRING, ETC. REFER TO ELECTRICAL DRAWINGS FOR ADDITIONAL DEMOLITION NOTE (TYPICAL THROUGHOUT SPACE).
204. DASHED LINES INDICATE TO REMOVE WALL OR COLUMN ENCLOSURE COMPLETELY. INCLUDING SOFFITS, BULKHEADS, CEILINGS AND ASSOCIATED FRAMING. TYP. THROUGHOUT LEASE SPACE.
205. EXISTING STRUCTURAL COLUMN.
206. DASHED LINES INDICATE TO REMOVE DOOR AND FRAME COMPLETELY.
207. EXISTING LAY-IN CEILING TILES AND LIGHTS TO BE REMOVED TYPICAL. SEE MECHANICAL AND ELECTRICAL DRAWINGS FOR ADDITIONAL INFORMATION.
208. REMOVE LIGHT FIXTURES COMPLETELY THROUGHOUT LEASE SPACE, U.N.O.
209. EXISTING STOREFRONT TO REMAIN, UNLESS NOTED OTHERWISE. SEE SHEET A1.1 FOR ADDITIONAL INFORMATION.
210. EXTERIOR FURRING AND GYP. BD. AT PERIMETER WALLS TO REMAIN. REMOVE ALL WALL BASE. G.C. TO TAKE ALL NECESSARY PRECAUTIONS TO PROTECT WALL DURING CONSTRUCTION. PREP TO RECEIVE NEW WALL FINISHES PER SHEET A1.3.
211. EXISTING ELECTRICAL EQUIPMENT PANEL LOCATION. REFER TO ELECTRICAL DRAWINGS FOR SCOPE OF WORK.
212. EXISTING PLUMBING FIXTURE / ACCESSORY. REMOVE FOR DEMOLITION OF SPACE SEE PLUMBING DRAWINGS FOR ADDITIONAL INFORMATION.
213. SAWCUT AND REMOVE PORTION OF EXISTING CONCRETE SLAB FOR PLUMBING TRENCH (APPROX. **277** S.F.) TRENCH LAYOUT FOR REFERENCE ONLY. G.C. SHALL VERIFY DEPTH OF SANITARY TIE-IN POINT AND CONFIRM ADEQUATE FALL FOR THE SEWER LINE PRIOR TO TRENCHING CONCRETE. NOTIFY ARCHITECT IF ADEQUATE FALL IS NOT ACHIEVABLE. IN-FILL TRENCH WITH CONCRETE TO MATCH AND ALIGN WITH ADJACENT FLOOR SLAB (INCLUDING COLOR MATCH). TROWEL CONCRETE SMOOTH. SEE DETAILS **6&7/A4.0** FOR ADDITIONAL INFORMATION.
214. EXISTING ROOF TOP UNIT TO BE REMOVED. SEE MECHANICAL DRAWINGS FOR ADDITIONAL INFORMATION. G.C. TO CONTRACT WITH LANDLORD'S ROOFING CONTRACTOR FOR ALL WORK RELATED TO MAINTAINING ROOFING WARRANTIES.
215. SAWCUT AND REMOVE PORTION OF EXISTING CONCRETE SLAB FOR POTTY PLATFORM RECESS (APPROX. **25** S.F. EACH) LAYOUT FOR REFERENCE ONLY. G.C. SHALL VERIFY DEPTH OF SANITARY TIE-IN POINT AND CONFIRM ADEQUATE FALL FOR THE SEWER LINE PRIOR TO TRENCHING CONCRETE. NOTIFY ARCHITECT IF ADEQUATE FALL IS NOT ACHIEVABLE. IN-FILL WITH CONCRETE TO MATCH ADJACENT FLOOR SLAB (INCLUDING COLOR MATCH). TROWEL CONCRETE SMOOTH. SEE DETAILS **6,7&8/A4.0** FOR ADDITIONAL INFORMATION.
216. SAWCUT MASONRY FOR NEW DOOR OPENING. FINISHED OPENING TO BE 3'-4" WIDE x 7'-4" HIGH. PROVIDE NEW STEEL LINTEL AT OPENING. REFER TO STRUCTURAL DETAIL S/S3.0 LINTEL SCHEDULE ON DRAWING S3.0 FOR ADDITIONAL INFORMATION.
217. GYP. BD. SILL TO REMAIN.
218. EXISTING H.M. DOOR AND FRAME TO BE REMOVED AND REPLACED WITH NEW. REFER TO DRAWING A5.0 FOR ADDITIONAL INFORMATION.
219. REMOVE EXISTING ROOFING SYSTEM AND ROOF DECKING AS NECESSARY FOR INSTALLATION OF NEW ROOFTOP HVAC UNIT. SEE SHEET **A2.0, STRUCTURAL** AND MECHANICAL DRAWINGS FOR ADDITIONAL INFORMATION. G.C. TO CONTRACT WITH LANDLORD'S ROOFING CONTRACTOR FOR ALL WORK RELATED TO MAINTAINING ROOFING WARRANTIES.
220. DEMOLISH EXISTING ASPHALT PAVEMENT (±1000 SQFT.) AND EXCAVATE AS REQUIRED FOR INSTALLATION OF NEW FENCING FOUNDATIONS, CONCRETE PERIMETER AND CRASHED AGGREGATE FOR TURF. SEE AS1.0 FOR ADDITIONAL INFORMATION.

KURT L. SCHMITZ
LICENSED ARCHITECT
No.51649
MINN.

ARCHITECTS, INC.
17710 Detroit Avenue Lakewood, Ohio 44107
Phone (216) 521-5134 Fax (216) 521-4824
www.adaarchitects.cc

dogtopia

DOGTOPIA

MAPLEWOOD, MN 55109

2017 WOODLYNN AVENUE

This document ("Instrument of Service") was prepared by ADA Architects, Inc. ("ADA") specifically for the referenced project and is not intended for any other use. ADA retains all common law, statutory and other reserved rights, including copyrights. This Instrument of Service shall not be used on other projects, for additions to this project, or completion of this project by others without ADA's prior written consent. Any unauthorized use of this Instrument of Service shall be at the user's sole risk and without liability to ADA. ADA makes no warranties, express or implied, of merchantability or of fitness for a particular purpose.

FRANCHISEE

LANG, BERT LLC

REVISIONS

#	DATE	TYPE
1		
2		
3		
4		
5		

DEMOLITION PLAN

DATE 03/23/20

JOB NO. 19492

D1.0

SHEET NO.

GENERAL NOTES

1. THE OWNER HAS REQUESTED THAT THE ARCHITECT PREPARE THESE DRAWINGS, WHICH ARE LIMITED IN SCOPE, TO ESTABLISH MINIMUM GUIDELINES FOR DESIGN OF THE PROJECT.

2. WHERE MATERIALS, ASSEMBLIES, EQUIPMENT, FIXTURES AND SYSTEMS ARE NOT SHOWN, OR ARE SHOWN DIAGRAMMATICALLY, IT IS THE RESPONSIBILITY OF THE GENERAL CONTRACTOR TO DETERMINE SPECIFIC LOCATIONS, PROVIDE SPECIFIC MATERIALS AND DETERMINE CONSTRUCTION DETAILING, ALL IN COMPLIANCE WITH APPLICABLE BUILDING CODES, REGULATIONS, AND INDUSTRY STANDARDS FOR MATERIALS AND METHODS OF INSTALLATION.

3. ALL DRAWINGS HAVE BEEN PREPARED WITH THE INTENT OF CURRENT CODE COMPLIANCE. IT IS THE RESPONSIBILITY OF THE GENERAL CONTRACTOR TO ENSURE FULL COMPLIANCE WITH PREVAILING STATE OR LOCAL CODE REQUIREMENTS.

4. DO NOT SCALE THE DRAWINGS. IF DIMENSIONAL DISCREPANCIES ARISE, CONTACT THE ARCHITECT.

5. DIMENSIONS OF THE EXISTING TENANT SPACE AND NEW DIMENSIONS WHICH RELATE TO THOSE EXISTING DIMENSIONS ARE ASSUMED AND TAKEN FROM INFORMATION PROVIDED BY THE OWNER OR OWNERS REPRESENTATIVES. IT IS IMPERATIVE THAT PRIOR TO THE ORDERING OF PREFABRICATED EQUIPMENT OR COMMENCING CONSTRUCTION THESE DIMENSIONS ARE FIELD VERIFIED TO AVOID CONFLICTS.

6. ANY DISCREPANCIES BETWEEN PORTIONS OF THE DOCUMENTS ARE NOT INTENDED. THE GENERAL CONTRACTOR IS TO CLARIFY WITH THE ARCHITECT ANY SUCH DISCREPANCIES PRIOR TO COMMENCING WORK.

7. ALL DIMENSIONS ARE TO FACE OF STUD UNLESS OTHERWISE NOTED OR LABELED FINISHED OPENING (F.O.).

8. ALL CONSTRUCTION SHALL COMPLY WITH THE APPLICABLE BUILDING CODES AND LOCAL DESCRIPTIONS.

9. ALL ELECTRICAL, MECHANICAL AND PLUMBING WORK SHALL CONFORM TO STATE AND LOCAL REQUIREMENTS.

10. CONSTRUCTION MAY NOT BEGIN UNTIL APPROVAL HAS BEEN GRANTED BY DOGTOPIA ENTERPRISES, LLC. THESE DRAWINGS ARE SUBJECT TO DOGTOPIA ENTERPRISES, LLC APPROVAL.

11. THE CONTRACTOR SHALL ASSESS CONDITION OF THE BUILDING ENVELOPE AND PROVIDE ANY FEEDBACK AND/ OR RECOMMENDATIONS TO DOGTOPIA ENTERPRISES, LLC AND THE FRANCHISEE TO REDUCE SOUND TRANSFER AND PROVIDE ADDITIONAL ENERGY EFFICIENCY BETWEEN THE EXTERIOR OF THE BUILDING AND LEASED SPACE. THE CONTRACTOR SHALL VERIFY THE BUILDING ENVELOPE MEETS ENERGY AND R-VALUE REQUIREMENTS PRIOR TO ANY NEW CONSTRUCTION. THE GENERAL CONTRACTOR SHALL BE RESPONSIBLE FOR ALL ASSOCIATED COSTS TO MEET THESE STANDARDS, INCLUDING FEES, REWORK AND INSPECTIONS IF NOT ADDRESSED PRIOR TO NEW CONSTRUCTION.

12. G.C. IS RESPONSIBLE FOR OWNER PROVIDED VENDOR INSTALLATION SUPERVISION AND COORDINATION. ANY DAMAGES ARE THE RESPONSIBILITY OF THE G.C.

13. G.C. IS RESPONSIBLE FOR COORDINATION OF LANDLORD SUPPLIED EQUIPMENT AND INSTALLATION.

14. THE GENERAL CONTRACTOR SHALL PROVIDE A FULL-TIME, QUALIFIED SITE SUPERINTENDENT FOR THE DURATION OF THE PROJECT.

15. IT IS THE RESPONSIBILITY OF THE GENERAL CONTRACTOR AND SUBCONTRACTORS TO MAKE THEMSELVES FAMILIAR WITH THE GENERAL CONDITIONS, PLANS, AND SPECIFICATIONS AND OTHER NOTES OR REFERENCES RELATED TO THIS PROJECT SO AS TO POSSESS FULL COMPREHENSION OF THE WORK THEY ARE TO PERFORM. ANY DISCREPANCIES SHALL BE IMMEDIATELY BROUGHT TO THE ATTENTION OF THE ARCHITECT.

16. NOTHING IN THE PLANS, SPECIFICATIONS, NOTES OR REFERENCES SHALL BE INTERPRETED SO AS TO ELIMINATE ANY REQUIREMENTS OR PROVISIONS OF NATIONAL, STATE, COUNTY, OR LOCAL BUILDING CODES AND ORDINANCES. ALL CONTRACTORS ARE RESPONSIBLE FOR FULL KNOWLEDGE OF, AND COMPLIANCE WITH THE AFOREMENTIONED REGULATIONS AND SHALL NOTIFY THE ARCHITECT OF ANY DISCREPANCIES OR CONFLICTS BEFORE BEGINNING THEIR WORK.

17. THE GENERAL CONTRACTOR AND ALL SUBCONTRACTORS SHALL VISIT THE SITE TO VERIFY ALL FIELD CONDITIONS AND DIMENSIONS RELATED TO THEIR WORK. THE GENERAL CONTRACTOR SHALL THEN SUBMIT A WRITTEN PROPOSAL OF HIS SCOPE OF WORK TO DOGTOPIA ENTERPRISES, LLC FOR AN APPROVAL. ANY DISCREPANCIES OR CONFLICTS SHALL BE REPORTED TO THE ARCHITECT BEFORE BEGINNING CONSTRUCTION.

18. UNLESS INDICATED "BY OTHERS" ON THE PLANS OR IN THE SPECIFICATIONS OR OTHERWISE DIRECTED BY DOGTOPIA ENTERPRISES, LLC, THE GENERAL CONTRACTOR AND SUBCONTRACTORS SHALL SUPPLY ALL LABOR AND MATERIALS AND MISCELLANEOUS ITEMS, NOT SPECIFICALLY SHOWN ON THE PLANS OR IN THE SPECIFICATIONS BUT OBVIOUSLY NECESSARY FOR THE COMPLETE AND PROPER INSTALLATION OF THEIR ELEMENTS OF WORK.

19. GC IS RESPONSIBLE FOR MEANS AND METHODS FOR PROPER INSTALLATION OF WORK INDICATED ON THESE DRAWINGS.

20. IT IS THE RESPONSIBILITY OF THE CONTRACTOR TO PROVIDE ADDITIONAL DESIGN / BUILD INFORMATION, WHICH MAY BE REQUIRED BY LOCAL CODE AUTHORITIES, WHICH MEETS THE DESIGN CRITERIA IN THESE DOCUMENTS. THE GENERAL CONTRACTOR SHALL MAINTAIN A WEATHER-TIGHT BUILDING AT ALL TIMES. ANY PERVIOUS INTERIOR MATERIALS THAT COME INTO CONTACT WITH MOISTURE MUST BE REMOVED AND REPLACED.

21. THE GENERAL CONTRACTOR IS PROHIBITED FROM ALLOWING ANY NON-CONSTRUCTION RELATED PERSONNEL FROM ENTERING THE JOBSITE WITHOUT PERMISSION FROM DOGTOPIA. GENERAL CONTRACTOR IS REQUIRED TO PROVIDE ALL MEANS NECESSARY TO MAINTAIN A SECURE SITE.

22. SPECIFICATION SUBSTITUTION IS PROHIBITED.

23. CONTRACTOR TO PROVIDE A 20' SECURE STORAGE CONTAINER (CONEX BOX) AT THE JOBSITE FOR USE BY DOGTOPIA ENTERPRISES, LLC FOR THE DURATION OF THE PROJECT, UNTIL ALL CONTENTS ARE INSTALLED IN THE NEW SPACE; NO MORE THAN TWO WEEKS FOLLOWING CERTIFICATE OF OCCUPANCY.

24. GENERAL CONTRACTOR SHALL PROVIDE A FULLY FUNCTIONAL SPACE AND ALL RELATED SYSTEMS.

25. ALL WORK AND MATERIALS DESCRIBED HEREIN ARE THE RESPONSIBILITY OF EITHER THE LANDLORD OR THE TENANT'S GENERAL CONTRACTOR. THE TERMS "GENERAL CONTRACTOR", "CONTRACTOR", OR "SUBCONTRACTOR" REFER TO THOSE ENGAGED (SEE WORK RESPONSIBILITY CHART) TO PERFORM THE WORK.

26. ALL RULES AND REGULATIONS, SCOPE OF WORK AND PROCEDURES INDICATED WILL BE PERFORMED BY THE SPECIFIC GENERAL CONTRACTOR, THEIR AGENTS, SUBCONTRACTORS, AND SUPPLIERS TO PROVIDE A TOTAL AND COMPLETE PROJECT FOR THE TENANT. WORK SHOWN IN THESE NOTES IS TO BE PERFORMED BY THE SPECIFIC GENERAL CONTRACTOR OR SUBCONTRACTORS, AGENTS AND / OR SUPPLIERS ONLY, WHETHER OR NOT THE WORK IS DELINEATED PROPERLY.

27. ALL CONTRACTORS SHALL CHECK AND VERIFY ALL FIELD CONDITIONS AND SHALL HAVE SOLE RESPONSIBILITY FOR VERIFICATION OF CLEAR HEIGHTS WITHIN THE PREMISES; ANY DISCREPANCIES SHALL BE REPORTED TO THE ARCHITECT IMMEDIATELY. A GENERAL CONTRACTOR IS TOTALLY RESPONSIBLE FOR ALL "HOLD" DIMENSIONS AND IS TO CONTACT THE ARCHITECT OF ANY DISCREPANCIES VERBALLY AND ALSO IN WRITING, FIRST, PRIOR TO BUILDING WALLS, IF THERE IS A QUESTION. TENANT'S FIXTURES FIT INTO PLACE WITH NO ROOM FOR ERROR. CONTRACTOR MUST REVIEW ENTIRE SET OF CONTRACT DOCUMENTS FOR CEILING HEIGHTS.

28. THE CONTRACTOR SHALL BE SOLELY RESPONSIBLE FOR AND HAVE CONTROL OVER CONSTRUCTION MEANS, METHODS, TECHNIQUES, SEQUENCES, AND PROCEDURES AND FOR COORDINATING ALL PORTIONS OF THE WORK UNDER THE CONTRACT, INCLUDING ANY AND ALL OSHA REQUIREMENTS, UNLESS CONTRACT DOCUMENTS GIVE OTHER SPECIFIC INSTRUCTIONS CONCERNING THESE MATTERS.

29. THE GENERAL CONTRACTOR AND THE SUBCONTRACTORS FOR THE GENERAL CONTRACTOR SHALL PAY FOR AND OBTAIN ALL PERMITS REQUIRED FOR THE WORK NOTED ON THESE PLANS. THIS INCLUDES COSTS FOR ALL INSPECTIONS BY AUTHORITIES HAVING JURISDICTION, BUILDING DEPARTMENT AND HEALTH DEPARTMENT PERMIT COSTS, AND PERMIT COSTS FOR FIXTURING SUPPLIED BY TENANT (IF APPLICABLE).

30. ALL CLEARANCES OF PIPES AND DUCTWORK INSTALLED BY THE GENERAL CONTRACTOR OR SUBCONTRACTORS MUST BE MAINTAINED FOR ADEQUATE HEIGHTS REQUIRED FOR CEILING SYSTEM AND LIGHT FIXTURES. CONTRACTOR MUST REVIEW ENTIRE SET OF CONTRACT DOCUMENTS FOR CEILING HEIGHTS. GENERAL CONTRACTOR (OR DESIGNATED AUTHORIZED CONTRACTOR AT GENERAL CONTRACTOR'S EXPENSE) TO REMOVE OR REPLACE AS REQUIRED ANY AND ALL EXISTING P.V.C. PIPING WITH LOCAL CODE ALLOWABLE MATERIALS THROUGHOUT LEASED PREMISES.

31. GENERAL CONTRACTOR AGREES THAT IN THE PERFORMANCE OF TENANT'S WORK AT THE PREMISES, ALL WORK SHALL BE PERFORMED IN A MANNER WHICH WILL NOT CREATE ANY WORK STOPPAGE, PICKETING, LABOR DISRUPTION OR DISPUTE OR VIOLATE LANDLORD'S LABOR CONTRACTS AFFECTING THE BUILDING OR INTERFERE WITH THE BUSINESS OF LANDLORD. IN THE EVENT OF THE OCCURRENCE OF ANY WORK STOPPAGE, PICKETING, LABOR DISRUPTION OR DISPUTE RESULTING FROM ACTIONS OR OMISSIONS OF GENERAL CONTRACTOR OR SUBCONTRACTORS OR ANY SUBTENANT OR CONCESSIONAIRE, OR THEIR RESPECTIVE EMPLOYEES, CONTRACTORS OR SUBCONTRACTORS, GENERAL CONTRACTOR SHALL, IMMEDIATELY UPON NOTICE FROM TENANT, CEASE THE CONDUCT GIVING RISE TO SUCH CONDITION. THIS CLAUSE MUST BE PART OF ALL GENERAL CONTRACTOR / SUBCONTRACTOR AGREEMENTS AND IF SUCH CLAUSE IS NOT INCLUDED, IT WILL NOT RELIEVE THE GENERAL CONTRACTOR OF THE REQUIREMENTS OR WORK STATED HEREIN.

32. ALL CONTRACTORS SHALL BE BONDED, LICENSED CONTRACTORS POSSESSING GOOD LABOR RELATIONS AND MUST BE CAPABLE OF QUALITY WORKMANSHIP, IN HARMONY WITH OTHER CONTRACTORS WORKING ON THE PROJECT. THE TENANT IS TO BE NOTIFIED IN WRITING OF THE NAMES, ADDRESSES, DAYTIME PHONE, FAX, AND EMERGENCY PHONE NUMBERS OF ALL SUBCONTRACTORS AND SUPPLIERS WORKING ON THIS PROJECT. GENERAL CONTRACTOR MUST ATTEST THAT NO PRODUCTS CONTAINING ASBESTOS OR HAZARDOUS MATERIAL WERE KNOWINGLY USED ON THIS PROJECT.

33. PRIOR TO COMMENCEMENT OF ANY WORK, THE GENERAL CONTRACTOR SHALL CONTACT AND MEET WITH LANDLORD'S TENANT COORDINATOR AND TENANT'S PROJECT MANAGEMENT REPRESENTATIVE FOR A PRE CONSTRUCTION MEETING. THE GENERAL CONTRACTOR WILL COMPLETE THE CHECKLIST FORM (CONTRACTOR INFORMATION FORM) REQUIRED FOR EACH TENANT'S SPACE THAT CONTRACTOR WILL BE WORKING ON AS REQUIRED UNDER LEASE OBLIGATION. THE CHECKLIST FORM INCLUDING SCHEDULE INFORMATION AS WELL AS GENERAL CONTRACTOR AND SUBCONTRACTORS INFORMATION IS TO BE SUBMITTED TO THE LANDLORD'S REPRESENTATIVE UPON ARRIVAL AT THE JOB SITE.

34. THE GENERAL CONTRACTOR SHALL HAVE AT ALL TIMES, AT THE PREMISES, LANDLORD APPROVED CONTRACT DOCUMENTS, BUILDING DEPARTMENT AND HEALTH DEPARTMENT (IF APPLICABLE) APPROVED PERMIT DRAWINGS.

35. AN APPROVAL BY THE TENANT WILL ONLY BE VALID IF IN WRITING AND SIGNED BY THE TENANT OR BY THE TENANT'S DESIGNATED REPRESENTATIVE FOR SUCH PURPOSE. THE GENERAL CONTRACTOR WILL BE RESPONSIBLE FOR OBTAINING APPROVAL FROM TENANT'S ARCHITECT ON ALL STRUCTURAL CHANGES DURING THE COURSE OF THE CONSTRUCTION PHASE OF PROJECT, AS WELL AS VERIFICATION OF CORRECT INSTALLATION AND SPECIFICATION FOR MISCELLANEOUS STEEL FOR MECHANICAL SYSTEMS, STEEL FOR MEZZANINES (IF APPLICABLE), DUCTS, ETC. THE LANDLORD'S ARCHITECT AND THE LANDLORD ARE NOT INVOLVED NOR WILL THEY TAKE ANY RESPONSIBILITY FOR TENANT'S STRUCTURE. ANY STRUCTURAL WORK ON PROJECT TO INCLUDE BUT NOT BE LIMITED TO MECHANICAL EQUIPMENT SUPPORTS, HANGING SYSTEMS, CONCRETE SLABS, COSTS, ETC.

36. THE GENERAL CONTRACTOR SHALL BE RESPONSIBLE FOR DAILY REMOVAL, OR AS REQUIRED BY LANDLORD, OF TRASH, RUBBISH AND SURPLUS MATERIALS RESULTING FROM CONSTRUCTION. THE CONTRACTORS AND SUBCONTRACTORS PARTICIPATING IN THE PERFORMANCE OF TENANT'S WORK SHALL REMOVE AND DISPOSE OF, AT LEAST ONCE A WEEK AND MORE FREQUENTLY AS TENANT MAY DIRECT, ALL DEBRIS AND RUBBISH CAUSED BY OR RESULTING FROM THE PERFORMANCE OF TENANT'S WORK AND, UPON COMPLETION THEREOF, REMOVE ALL TEMPORARY STRUCTURES, SURPLUS MATERIALS, DEBRIS AND RUBBISH OF WHATEVER KIND REMAINING IN THE BUILDING WHICH HAD BEEN BROUGHT IN OR CREATED BY THE CONTRACTOR AND SUBCONTRACTORS IN THE PERFORMANCE OF TENANT'S WORK. THIS CONTRACTOR MUST MAINTAIN A CLEAR PATH OF EGRESS FROM THE PREMISES FREE FROM TRASH AND RUBBISH AT ALL TIMES. ALL REMOVAL OF CONSTRUCTION DEBRIS TO AN APPROVED DUMPING SITE TO BE INCLUDED IN THE GENERAL CONTRACTOR'S WORK.

37. ALL EXITS SHALL BE UNOBSTRUCTED AT ALL TIMES DURING CONSTRUCTION AND OCCUPANCY.

38. IT IS THE GENERAL CONTRACTOR'S REQUIREMENT THROUGH ITS SUBCONTRACTORS, TO RECONFIGURE AND BRING IN NEW UTILITY SERVICES AS REQUIRED, TO MEET THE NEEDS OF THESE SPECIFIC CONTRACT DOCUMENTS.

39. THE GENERAL CONTRACTOR AND ALL SUBCONTRACTORS WORKING ON THIS PROJECT ARE RESPONSIBLE FOR CONTACTING THE PUBLIC UTILITY COMPANIES SUPPLYING UTILITIES TO THE AREA WHERE THE PROJECT IS LOCATED, IN ORDER TO VERIFY LOCATIONS OF UTILITIES, UNDERGROUND OR OVERHEAD, AND SECURE THE PROPER PROCEDURES WHILE WORKING ADJACENT TO, ABOVE OR NEAR SUCH UTILITIES TO AVOID ANY PROBLEMS WITH EXPLOSIONS, DISCONNECTION, REMOVALS, ETC.

40. THE GENERAL CONTRACTOR SHALL APPLY FOR ALL UTILITY METERS AND NOTIFY THE UTILITY COMPANY OF THE NAME, ADDRESS AND PHONE NUMBERS OF THE TENANT FOR PERMANENT SERVICES. TENANT'S G.C. UNLESS OTHERWISE NOTED SHALL BRING IN ALL ADDITIONAL SERVICES, ADEQUATE FOR TENANT'S NEEDS AS REQUIRED ,INCLUDING, BUT NOT LIMITED TO ELECTRIC, SPRINKLER, SOIL (WASTE), AND DOMESTIC WATER LINES (WHEN APPLICABLE).

41. THE PROPER RECEIPT OF ALL NEW MATERIALS AND EQUIPMENT AT THE JOB SITE IS THE RESPONSIBILITY OF THE GENERAL CONTRACTOR AND / OR ITS SUBCONTRACTORS (IF ANY). SECURE AND SAFE STORAGE OF ALL NEW AND EXISTING MATERIALS AND EQUIPMENT TO REMAIN (IF ANY) WILL BE PROVIDED BY THE GENERAL CONTRACTOR. GENERAL CONTRACTOR TO IMMEDIATELY ADVISE TENANT OR TENANT'S REPRESENTATIVE OF ALL DAMAGED OR DEFICIENT SHIPMENTS OF MATERIALS AND EQUIPMENT, WHETHER SUPPLIED BY TENANT OR DIRECTLY BY CONTRACTOR OR IT'S SUPPLIERS. GENERAL CONTRACTOR TO COMPLETE AND SUBMIT ALL NECESSARY PAPERWORK AND ARRANGE INSPECTIONS OF DAMAGED GOODS AS PER TENANT CONSTRUCTION DEPT. REQUIREMENTS. NOTIFY TENANT, OR TENANT'S REPRESENTATIVE OF ANY POSSIBLE DELAYS. INCOMPLETE ORDERS AND DELAYS ARE TO BE IMMEDIATELY BROUGHT TO THE ATTENTION OF THE SUPPLIER AND THE ARCHITECT. SUBMIT CONFIRMATION OF ALL ORDERS, DELIVERY DATES, AND A FULL WRITTEN SCHEDULE TO TENANT'S ARCHITECT.

42. ALL THE FLOOR FINISHES, WITHIN THE PREMISES, OR AT THE TRANSITION BETWEEN LANDLORD FLOOR FINISHES AND TENANT'S FLOOR FINISHES (AT ENTRY OR REAR DOOR, IF APPLICABLE) ARE TO BE SMOOTH AND LEVEL TO AVOID TRIPPING HAZARDS AND BE WITHIN THE REQUIREMENTS OF BARRIER FREE DESIGN. IF AN EXPANSION JOINT COVER IS REQUIRED, SUCH COVER IS TO BE LEVEL AND SMOOTH WITH TENANT'S FLOOR FINISH ELEVATION AND WILL NOT PROJECT ABOVE SUCH FLOOR FINISH ELEVATION. IF THE EXISTING SLABS ARE NOT LEVEL, THE GENERAL CONTRACTOR IS REQUIRED TO COMPLETE FLASH PATCHING THROUGHOUT TO OBTAIN A SMOOTH AND LEVEL CONCRETE SLAB.

43. SHOULD AN EXPANSION JOINT OCCUR IN THE LEASED PREMISES, GENERAL CONTRACTOR IS RESPONSIBLE FOR ALL CONSTRUCTION AFFECTED BY SUCH JOINT, INCLUDING FURNISHING AND INSTALLING A LEVEL, SLAB HEIGHT EXPANSION JOINT COVER, INCLUDING FLOOR, WALLS AND CEILING. GENERAL CONTRACTOR SHALL MAINTAIN INTEGRITY OF ALL SUCH EXPANSION JOINTS IN A MANNER CONSISTENT WITH ACCEPTABLE CONSTRUCTION DESIGN PRACTICES.

44. THE STRUCTURAL SYSTEM OF THE BUILDING HAS BEEN DESIGNED TO CARRY A MAXIMUM LIVE LOAD AS SPECIFIED IN THE LANDLORD'S CRITERIA, AND THE LANDLORD'S OR TENANT'S GENERAL CONTRACTOR AND / OR THEIR SUBCONTRACTOR AND / OR ANY AND ALL MATERIAL SUPPLY HANDLERS SHALL NOT IMPOSE ANY LOADING FOR ANY OF THE TENANT'S WORK ON A TEMPORARY OR PERMANENT BASIS WHICH CAN EXCEED SUCH SPECIFIED LOAD.

45. ANY ALTERATIONS, ADDITIONS, DRILLING, WELDING OR OTHER ATTACHMENT OR REINFORCEMENTS TO LANDLORD'S STRUCTURE TO ACCOMMODATE TENANT'S WORK SHALL NOT BE PERFORMED WITHOUT, IN EACH INSTANCE, GENERAL CONTRACTOR OBTAINING LANDLORD'S PRIOR WRITTEN APPROVAL, AND THIS CONTRACTOR SHALL LEAVE LANDLORD'S STRUCTURE AS STRONG AS, OR STRONGER THAN, THE ORIGINAL DESIGN AND WITH FINISHES UNIMPAIRED. ONLY UTILIZE LANDLORD'S DESIGNATED ROOFING CONTRACTOR FOR ALL ROOF PENETRATIONS, FLASHING AND COUNTER FLASHING.

46. THE CONSTRUCTION DRAWINGS LISTED IN THESE CONTRACT DOCUMENTS HAVE BEEN PREPARED BASED ON THE BEST INFORMATION AVAILABLE TO TENANT DURING PREPARATION OF THE CONTRACT DOCUMENTS. IN THE EVENT THAT PROBLEMS ARISE DURING THE COURSE OF THE PROJECT, DUE TO UNKNOWN SITE CONDITIONS OR CODE AND LANDLORD REQUIREMENTS (IF ANY) THAT CONFLICT WITH THE CONTRACT DOCUMENTS, THE GENERAL CONTRACTOR SHALL INFORM THE TENANT'S ARCHITECT IMMEDIATELY. ANY CHANGES THAT WILL BE REQUIRED, WILL BE DELINEATED BY TENANT ARCHITECT.

47. QUALITY STANDARDS: ALL SUCH WORK SHALL BE PERFORMED IN A FIRST-CLASS WORKMANLIKE MANNER AND SHALL BE IN GOOD AND USABLE CONDITION AT THE DATE OF COMPLETION THEREOF. GENERAL CONTRACTOR SHALL REQUIRE ANY PERSON PERFORMING ANY SUCH WORK TO GUARANTEE THE SAME TO BE FREE FROM ANY AND ALL DEFECTS IN WORKMANSHIP AND MATERIALS FOR ONE (1) YEAR FROM THE DATE OF ISSUANCE OF THE CERTIFICATE OF OCCUPANCY. WARRANTY WORK SHALL HAVE A ONE (1) YEAR WARRANTY FROM DATE OF REPAIR. TENANT SHALL ALSO REQUIRE ANY SUCH PERSON TO BE RESPONSIBLE FOR THE REPLACEMENT OR REPAIR WITHOUT ADDITIONAL CHARGE, OF ANY AND ALL WORK DONE OR FURNISHED BY OR THROUGH SUCH PERSON, WHICH SHALL BECOME DEFECTIVE WITHIN ONE (1) YEAR AFTER COMPLETION OF THE WORK. THE CORRECTION OF SUCH WORK SHALL INCLUDE, WITHOUT ADDITIONAL CHARGE, ALL EXPENSES AND DAMAGES IN CONNECTION WITH SUCH REMOVAL, REPLACEMENT OR REPAIR OF ANY PART OF THE WORK WHICH MAY BE DAMAGED OR DISTURBED THEREBY. WARRANTY AND PUNCH LIST WORK MUST BE COMPLETED SUCH THAT THEY DO NOT IPACT BUSINESS OPERATIONS. THIS MAY REQUIRE WEEKEND OR OFF-HOURS WORK AT NO COST TO OWNER. ALL WARRANTIES OR GUARANTEES AS TO MATERIALS OR WORKMANSHIP ON OR WITH RESPECT TO TENANT'S WORK SHALL BE CONTAINED IN THE CONTRACT OR SUBCONTRACT WHICH SHALL INSURE TO THE BENEFIT OF BOTH LANDLORD AND TENANT, AS THEIR RESPECTIVE INTERESTS APPEAR AND CAN BE DIRECTLY ENFORCED BY EITHER. GENERAL CONTRACTOR TO HAVE THIS CLAUSE IN EVERY SUBCONTRACTOR AGREEMENT FOR THE PROJECT AND IF SUCH CLAUSE IS NOT INCLUDED, IT WILL NOT RELIEVE THE GENERAL CONTRACTOR OF THE REQUIREMENTS OR WORK STATED HEREIN. **G.C. SHALL MANAGE ALL WARRANTY ITEMS AND REMEDIES INCLUDING MANAGING SUB-CONTRACTORS AND VENDORS FOR A PERIOD OF ONE YEAR FROM TURNOVER OR CERTIFICATE OF OCCUPANCY (WHICHEVER IS OCCURS LATEST).**

48. TENANT'S WORK SHALL BE COORDINATED WITH THAT OF LANDLORD AND OTHER TENANTS IN THE BUILDING TO SUCH EXTENT THAT TENANT'S WORK WILL NOT INTERFERE WITH OR DELAY COMPLETION OF OTHER CONSTRUCTION WORK IN THE BUILDING.

49. CONSTRUCTION SHOWN TO REMAIN AS EXISTING SHALL BE REPAIRED, IF NECESSARY, IN A MANNER THAT WILL BE CONSISTENT WITH THE NEW CONSTRUCTION, AND PAINTED TO MATCH THE OVERALL COLOR SCHEME, UNLESS OTHERWISE NOTED.

50. THE CONSTRUCTION SITE SHALL BE CLEANED AND TRASH REMOVED DAILY.

51. THE GENERAL CONTRACTOR SHALL PERFORM ALL WORK IN CONFORMITY WITH THOSE LAWS HAVING JURISDICTION WHETHER OR NOT SUCH WORK IS SPECIFICALLY SHOWN ON THESE DRAWINGS, INCLUDING ALL SEISMIC REQUIREMENTS. THE GENERAL CONTRACTOR SHALL PROCURE AND PAY FOR ALL NECESSARY BUILDING PERMITS AND SHALL BE REIMBURSED FOR GENERAL BUILDING PERMIT COSTS BY OWNER. BUSINESS LICENSE COSTS ARE NOT REIMBURSABLE.

52. THE GENERAL CONTRACTOR SHALL BE RESPONSIBLE FOR FOR THE QUALITY OF WORKMANSHIP AND FOR COMPLIANCE WITH THE DESIGN. THE GENERAL CONTRACTOR SHALL CORRECT ALL ERRORS AND DEVIATIONS AS REQUESTED BY THE OWNER.

53. THE GENERAL CONTRACTOR SHALL CONTACT THE OWNER / ARCHITECT IMMEDIATELY IF THEY ENCOUNTER ANY HAZARDOUS MATERIALS.

54. EXACT LOCATIONS OF PIPING, DUCTWORK, CONDUIT AND FIXTURES SHALL BE COORDINATED BETWEEN CONTRACTORS AND SUBCONTRACTORS TO AVOID INTERFERENCE.

55. ALL SPRINKLER HEADS SHOWN ARE CONCEPTUAL ONLY. GENERAL CONTRACTOR TO HIRE A LICENSED SPRINKLER CONTRACTOR TO DESIGN AND INSTALL / MODIFY SPRINKLER SYSTEM. HEAD REPLACEMENT TO MEET ALL LOCAL AND NATIONAL CODES INCLUDING NFPA-13.

56. AFTER COMPLETION OF THE WORK, PARTS OF THE BUILDING SHALL BE CLEANED WHERE EVER SUCH CLEANING IS REQUIRED, INCLUDING AREAS OF THE BUILDING MADE DIRTY BY CONSTRUCTION WORK. THE GENERAL CONTRACTOR SHALL REMOVE FROM THE PREMISES TRASH, RUBBISH, TOOLS, EQUIPMENT AND EXCESS MATERIALS. THE BUILDING IS TO BE LEFT IN PERFECTLY CLEAN CONDITION.

57. EACH CONTRACTOR SHALL COORDINATE ARCHITECTURAL DRAWINGS WITH THE PLUMBING, MECHANICAL AND ELECTRICAL DRAWINGS AND ALL SPECIFICATIONS BEFORE PROCEEDING WITH THE WORK AND SHALL NOTIFY THE ARCHITECT OF ANY DISCREPANCIES OR CONFLICTS IMMEDIATELY. ALL DISCREPANCIES SHALL BE RESOLVED PRIOR TO THE CONTRACTOR PROCEEDING WITH AFFECTED WORK.

58. ALL ADDITIONAL MATERIALS, EQUIPMENT, LABOR, ETC. NOT SHOWN BUT REQUIRED FOR PROPER COMPLETION OF PROJECT SHALL BE PROVIDED BY THE CONTRACTOR.

59. EXIST. PORTIONS OF THE BUILDING SHALL COMPLY WITH PROVISIONS OF EXISTING OCCUPANCIES, AS PER SET FORTH IN NFPA 101 LIFE SAFETY CODE, IBC CHAPTER 34 OR IEBC AS REQUIRED BY LOCAL AUTHORITY HAVING JURISDICTION.

60. GENERAL CONTRACTOR SHALL DISTRIBUTE ALL NECESSARY DRAWINGS AND/OR COPIES OF CONSTRUCTION DOCUMENTS FOR REVISIONS AND/ OR DISTRIBUTION TO PARTIES DURING CONSTRUCTION PHASE AT NO ADDITIONAL COST TO THE OWNER.

61. SIGNAGE PERMITTING DRAWINGS TO BE SUBMITTED SEPARATELY. ALL SIGNAGE TO COMPLY WITH LANDLORD TENANT CRITERIA AND STATE/LOCAL CODES. COORDINATE WITH SIGNAGE VENDOR FOR ANY SPECIFIC CRITERIA TO BE USED.

62. GENERAL CONTRACTOR IS RESPONSIBLE FOR MAINTAINING A WATER-TIGHT BUILDING. THIS INCLUDES OVERSEEING ANY LANDLORD'S CONTRACTORS TO ENSURE ALL SYSTEMS ARE SEALED / WATERTIGHT BEFORE RAIN EVENTS.

63. NO TOBACCO USE PERMITTED INSIDE THE BUILDING.

DOGTOPIA SPECIFICATIONS

DOGTOPIA DIVISION 1 SPECS:

011000 - SUMMARY
A. SEE COVER SHEET FOR PROJECT SCOPE.
B. PROJECT WILL BE CONSTRUCTED UNDER A SINGLE PRIME CONTRACT.
C. ACCESS TO SITE: EACH CONTRACTOR SHALL HAVE FULL USE OF PROJECT SITE FOR CONSTRUCTION OPERATIONS DURING CONSTRUCTION PERIOD. CONTRACTOR'S USE OF PROJECT SITE IS LIMITED ONLY BY OWNER'S RIGHT TO PERFORM WORK OR TO RETAIN OTHER CONTRACTORS ON PORTIONS OF PROJECT.
D. COORDINATION WITH OCCUPANTS: FULL OWNER OCCUPANCY: OWNER WILL OCCUPY SITE AND ADJACENT BUILDING(S) DURING ENTIRE CONSTRUCTION PERIOD. COOPERATE WITH OWNER DURING CONSTRUCTION OPERATIONS TO MINIMIZE CONFLICTS AND FACILITATE OWNER USAGE. PERFORM THE WORK SO AS NOT TO INTERFERE WITH OWNER'S DAY-TO-DAY OPERATIONS. MAINTAIN EXISTING EXITS UNLESS OTHERWISE INDICATED.
E. WORK RESTRICTIONS: COMPLY WITH LIMITATIONS ON USE OF PUBLIC STREETS AND WITH OTHER REQUIREMENTS OF AUTHORITIES HAVING JURISDICTION.
F. ON-SITE WORK HOURS: LIMIT WORK IN THE EXISTING BUILDING TO NORMAL BUSINESS WORKING HOURS OF 8:00 A.M. TO 5:00 P.M., MONDAY THROUGH FRIDAY, UNLESS OTHERWISE INDICATED.
G. THE GENERAL CONTRACTOR IS TO ARRANGE WITH THE LANDLORD FOR THE BUILDING, WHERE BUILDING EQUIPMENT AND MATERIALS ARE TO BE LOCATED AND HOW TRUCK TRAFFIC IS TO BE ROUTED TO AND FROM THE BUILDING.
H. ALL WORK ON THIS PROJECT SHALL BE IN ACCORDANCE WITH ALL CODES, SUB-CODES, BUILDING DEPARTMENT REQUIREMENTS AND HEALTH DEPARTMENT REQUIREMENTS. GENERAL CONTRACTOR TO CONTACT LOCAL BUILDING OFFICIALS FOR SPECIFIC REQUIREMENTS FOR THIS USE.

012900 - PAYMENT PROCEDURES
A. SCHEDULE OF VALUES: COORDINATE PREPARATION OF THE SCHEDULE OF VALUES WITH PREPARATION OF CONTRACTOR'S CONSTRUCTION SCHEDULE.
B. SUBMIT THE SCHEDULE OF VALUES TO ARCHITECT WITHIN 3 DAYS OF PROJECT AWARD.
C. ARRANGE SCHEDULE OF VALUES CONSISTENT WITH FORMAT OF AIA DOCUMENT G703
D. APPLICATIONS FOR PAYMENT: EACH APPLICATION FOR PAYMENT FOLLOWING THE INITIAL APPLICATION FOR PAYMENT SHALL BE CONSISTENT WITH PREVIOUS APPLICATIONS AND PAYMENTS AS CERTIFIED BY ARCHITECT.
E. PAYMENT APPLICATION TIMES: SUBMIT APPLICATION FOR PAYMENT TO ARCHITECT BY THE LAST OF THE MONTH. THE PERIOD COVERED BY EACH APPLICATION FOR PAYMENT IS ONE MONTH, ENDING ON THE LAST DAY OF THE MONTH.
F. USE AIA DOCUMENT G702 AND AIA DOCUMENT G703 FOR APPLICATIONS FOR PAYMENT.
G. SUBMIT SIGNED AND NOTARIZED COPY OF EACH APPLICATION FOR PAYMENT TO ARCHITECT. COPY SHALL INCLUDE WAIVERS OF LIEN.
H. CONTRACTOR IS RESPONSIBLE FOR COMPLYING WITH DOGTOPIA'S LENDER REQUIREMENTS, INCLUDING PAYMENT TERMS.
I. CHANGE ORDERS, OVERHEAD AND PROFIT (COMBINED) SHALL NOT EXCEED 10%.
J. THE CONTRACTOR SHALL PROVIDE THE FOLLOWING WITH FINAL INVOICE:
   1. ORIGINAL OR CLEAR PHOTO COPIES OF CERTIFICATE OF OCCUPANCY PERMIT AND HEALTH INSPECTION REPORT.
   2. LISTING OF SUBCONTRACTORS AND AREA OF RESPONSIBILITY, COMPLETE WITH TRADE NAME, OWNER'S NAME, ADDRESS, TELEPHONE NUMBER AND FEDERAL ID NUMBER.
   3. PROPERLY EXECUTED LIEN WAIVER.
   4. SERIAL NUMBERS AND DATE OF MANUFACTURE OF ALL INSTALLED HVAC EQUIPMENT.
   5. A COMPLETE SET OF AS-BUILT DRAWINGS.

013200 - CONSTRUCTION PROGRESS DOCUMENTATION
A. GENERAL CONTRACTOR IS TO PROVIDE A SCHEDULE AND PROJECT CALENDAR TO ADA PROJECT MANAGER WITHIN 3 DAYS OF PROJECT AWARD.
B. THE CONTRACTOR SHALL PROVIDE WEEKLY REPORTS TO THE PROJECT ARCHITECT TO INCLUDE:
   1. SUMMARY OF WEEK'S ACTIVITIES.
   2. TRADES OPERATING ON-SITE.
   3. PERCENT COMPLETE OF PRIMARY ACTIVITIES.
   4. UPDATED PROJECT SCHEDULE.
   5. CURRENT PROJECTED CERTIFICATE OF OCCUPANCY ISSUANCE DATE.
   6. PHOTOS OF PROGRESS AND MAJOR DELIVERABLES.
C. THE GENERAL CONTRACTOR SHALL CONSULT WITH THE SUBCONTRACTORS AND COORDINATE THE WORK IN ORDER TO ADHERE TO THE SCHEDULE AGREED UPON BY DOGTOPIA ENTERPRISES, LLC.
D. GENERAL CONTRACTOR IS RESPONSIBLE FOR OBTAINING ANY AND ALL PERMITS. SCHEDULING ALL INSPECTIONS

SECTION 015000 - TEMPORARY FACILITIES AND CONTROLS
A. SANITARY FACILITIES: PROVIDE TEMPORARY TOILETS, WASH FACILITIES, AND DRINKING WATER FOR USE OF CONSTRUCTION PERSONNEL. COMPLY WITH REQUIREMENTS OF AUTHORITIES HAVING JURISDICTION FOR TYPE, NUMBER, LOCATION, OPERATION, AND MAINTENANCE OF FIXTURES AND FACILITIES.
B. TEMPORARY HEATING AND COOLING: PROVIDE TEMPORARY HEATING AND COOLING REQUIRED BY CONSTRUCTION ACTIVITIES FOR CURING OR DRYING OF COMPLETED INSTALLATIONS OR FOR PROTECTING INSTALLED CONSTRUCTION FROM ADVERSE EFFECTS OF LOW TEMPERATURES OR HIGH HUMIDITY. SELECT EQUIPMENT THAT WILL NOT HAVE A HARMFUL EFFECT ON COMPLETED INSTALLATIONS OR ELEMENTS BEING INSTALLED.
C. ELECTRIC POWER SERVICE: PROVIDE ELECTRIC POWER SERVICE AND DISTRIBUTION SYSTEM OF SUFFICIENT SIZE, CAPACITY, AND POWER CHARACTERISTICS REQUIRED FOR CONSTRUCTION OPERATIONS.
D. ANY SCAFFOLDING, SAFETY RAILINGS, BARRICADES AND / OR PROTECTION DEVICES REQUIRED FOR THE PROJECT WILL BE FURNISHED AND PAID FOR BY THE GENERAL CONTRACTOR AS PART OF THE BASE BID. PROTECTION OF WORK IN PLACE - WORK IN PLACE THAT IS SUBJECT TO DAMAGE BECAUSE OF OPERATIONS BEING CARRIED ON ADJACENT THERETO SHALL BE COVERED, BOARDED UP, OR SUBSTANTIALLY ENCLOSED WITH ADEQUATE PROTECTION. ALL FORMS OF PROTECTION SHALL BE CONSTRUCTED IN A MANNER SUCH THAT, UPON COMPLETION, THE ENTIRE WORK WILL BE DELIVERED TO THE OWNER IN PROPER, WHOLE, AND UNBLEMISHED CONDITION. ALL SUCH WORK SHALL BE COORDINATED WITH THE TENANT'S REPRESENTATIVE. THE TENANT'S ARCHITECT IS NOT RESPONSIBLE FOR JOB SITE SAFETY OR EXISTING CONDITIONS AT THE JOB SITE AND SINCE ALL WORK IS BY GENERAL CONTRACTOR FOR THE TENANT "FIT-OUT", THEIR REPRESENTATIVES WILL BE REQUIRED TO DO ALL SUPERVISION, OBSERVATIONS AND JOB SITE SAFETY.
E. EACH CONTRACTOR AND SUBCONTRACTOR PARTICIPATING IN THE PERFORMANCE OF TENANT'S WORK SHALL (A) MAKE APPROPRIATE ARRANGEMENTS WITH LANDLORD FOR TEMPORARY UTILITY CONNECTIONS INCLUDING WATER AND ELECTRICITY, AS AVAILABLE WITHIN THE BUILDING, WHICH CONNECTIONS SHALL BE AT SUCH LOCATIONS AS SHALL BE DETERMINED BY LANDLORD, (B) PAY THE COST OF THE CONNECTIONS AND OF PROPER MAINTENANCE AND REMOVAL OF SAME, AND (C) PAY ALL UTILITY CHARGES INCURRED AT THE PREVAILING RATES OF THE UTILITY COMPANY PROVIDING SUCH SERVICE TO THE BUILDING, DURING THE COURSE OF CONSTRUCTION UP TO AND INCLUDING THE DATE OF "TURN OVER" TO THE TENANT.
F. THE GENERAL CONTRACTOR SHALL FURNISH AND INSTALL, AS REQUIRED, BEGINNING WITH THE CONSTRUCTION PHASE, HAND OPERATED FIRE EXTINGUISHERS, U.L. RATED, AS PER LOCAL CODE REQUIREMENTS: PLACEMENT AS APPROVED BY TENANT AND LOCAL BUILDING OFFICIAL.
G. BOTH GENERAL CONTRACTORS, AS APPLICABLE, AND ALL SUBCONTRACTORS ARE REQUIRED TO CHECK AND VERIFY ALL DIMENSIONS AND FIELD CONDITIONS AT BUILDING SITE AND PREMISES AND NOTIFY THE LANDLORD, THE LANDLORD'S REPRESENTATIVE AND TENANT'S PROJECT ARCHITECT OR TENANT'S CONSTRUCTION REPRESENTATIVE OF ANY AND ALL DISCREPANCIES AND LIST ANY WORK NOT YET COMPLETED BEFORE STARTING WORK. IF A GENERAL CONTRACTOR IS REQUIRED TO INSTALL A BARRICADE DURING THE CONSTRUCTION PHASE OF THIS PROJECT, SUCH BARRICADE TO MEET THE LATEST BARRICADE DESIGN REQUIREMENTS OF THE TENANT, INCLUDING THE PAINTING OF SUCH BARRICADE AND ANY SIGNAGE ADDITIONALLY, THIS BARRICADE MUST BE MOVED OUT AS REQUIRED FOR WORK AND / OR REMOVED AT THE END OF THE CONSTRUCTION TIME PERIOD. CHECK WITH THE LANDLORD TO VERIFY IF A BARRICADE HAS PREVIOUSLY BEEN INSTALLED ON THESE PREMISES IN ANTICIPATION OF CONSTRUCTION BY THE TENANT; IF THIS IS THE CASE, DO NOT INCLUDE ANY COST FOR THE ACTUAL BARRICADE BUT DO INCLUDE COSTS FOR MOVING SUCH BARRICADES IN AND OUT.

SECTION 017700 - CLOSEOUT PROCEDURES
A. THE PROVIDED PUNCHLIST TEMPLATE SHALL BE COMPLETED AND PROVIDED TO DOGTOPIA WITHIN (5) WORKING DAYS PRIOR TO CERTIFICATE OF OCCUPANCY DATE. THE PUNCHLIST SHALL BE UPDATED AND PROVIDED TO DOGTOPIA WITH CONTRACTOR PROGRESS WITHIN (3) DAYS AFTER RECEIVING CERTIFICATE OF OCCUPANCY AND PUNCHLIST ITEMS MUST BE BETTER THAN 75% COMPLETED. ALL PUNCHLIST ITEMS MUST BE 100% COMPLETED (7) CALENDAR DAYS AFTER CERTIFICATE OF OCCUPANCY IS ACHIEVED. LIQUIDATED DAMAGES OF $2,000 PER DAY TO BE PAID BY GENERAL CONTRACTOR TO CLIENT FOR EXCEEDING DURATIONS OR NOT MEETING REQUIRED PROGRESS, AND WORK MAY BE SUPPLEMENTED AT THE CONTRACTOR'S EXPENSE.
B. A PUNCHLIST WILL BE GENERATED BY DOGTOPIA AND THE ARCHITECT, AND SHALL BE COMPLETED WITHIN THE ABOVE DURATIONS BUT NO MORE THAT (5) CALENDAR DAYS AFTER ISSUANCE IF PROVIDED AFTER CERTIFICATE OF OCCUPANCY.
C. SUBMIT CLOSEOUT SUBMITTALS SPECIFIED IN INDIVIDUAL SECTIONS, INCLUDING SPECIFIC WARRANTIES, WORKMANSHIP BONDS, MAINTENANCE SERVICE AGREEMENTS, FINAL CERTIFICATIONS, AND SIMILAR DOCUMENTS. THIS SUBMITTAL SHALL ALSO INCLUDE TEST AND BALANCE REPORTS WITH THE ARCHITECT / ENGINEER OF RECORD APPROVAL. PROVIDING CERTIFICATE OF OCCUPANCY AND FINAL HEALTH INSPECTION.
D. GENERAL CONTRACTOR SHALL ENGAGE A PROFESSIONAL CLEANING COMPANY TO CLEAN THE ENTIRE CENTER PRIOR TO FIXTURING AND THE NIGHT BEFORE TURNOVER. MAINTAIN AN ACCEPTABLE LEVEL OF CLEANLINESS AT ALL TIMES IN BETWEEN. GC SHALL COORDINATE AND MANAGE THE CLEANING OF ALL FLOORING WITH THE APPROPRIATE WALK-BEHIND SCRUBBER. GC SHALL COORDINATE ALL CLEANINGS WITH CENTER OPERATIONS.
E. UPON COMPLETION OF CONSTRUCTION, GENERAL CONTRACTOR TO SUBMIT RECORD DRAWINGS OF THE PREMISES TO ARCHITECT AS INDICATED IN SECTION 017839.
F. PROVIDE OPERATION AND MAINTENANCE DATA TO ARCHITECT AS INDICATED IN SECTION 017823.
G. ALL PUNCHLIST AND WARRANTY ITEMS MUST BE COMPLETED SUCH THAT THEY DO NOT IMPACT BUSINESS OPERATIONS. THIS MAY REQUIRE WEEKEND OR OFF HOURS WORK.
H. ONCE THE DAYCARE IS IN OPERATION ANY WORK COMPLETED MUST LEAVE THE SPACE IN A SAFE, CLEAN, AND OPERABLE CONDITION.

SECTION 017823 - OPERATION AND MAINTENANCE DATA
A. ASSEMBLE A COMPLETE SET OF EMERGENCY INFORMATION INDICATING PROCEDURES FOR USE BY EMERGENCY PERSONNEL AND BY OWNER'S OPERATING PERSONNEL FOR FIRE, GAS LEAK, POWER FAILURE.
B. ASSEMBLE A COMPLETE SET OF MAINTENANCE DATA INDICATING CARE AND MAINTENANCE OF EACH PRODUCT, MATERIAL, AND FINISH INCORPORATED INTO THE WORK.

SECTION 017839 - PROJECT RECORD DOCUMENTS
A. RECORD PRINTS: MAINTAIN ONE SET OF MARKED-UP PAPER COPIES OF THE CONTRACT DRAWINGS AND SHOP DRAWINGS, INCORPORATING NEW AND REVISED DRAWINGS AS MODIFICATIONS ARE ISSUED.
B. SUBMIT ONE PAPER-COPY SET OF MARKED-UP RECORD PRINTS.
C. SUBMIT RECORD DIGITAL DATA FILES OF MARKED-UP RECORD PRINTS.

SECTION 017900 - DEMONSTRATION AND TRAINING
A. PROVIDE THE FRANCHISEE AND STAFF INSTRUCTION IN OPERATION AND MAINTENANCE OF SYSTEMS, SUBSYSTEMS, AND EQUIPMENT.
B. ENGAGE QUALIFIED INSTRUCTORS TO INSTRUCT OWNER'S PERSONNEL

DOGTOPIA DIVISION 2 SPECS:

SECTION 024119 - SELECTIVE DEMOLITION
A. DEMOLITION SHALL BE COORDINATED AS REQUIRED AT THE EXISTING SPACE FOR NEW CONSTRUCTION TO COMMENCE.
B. PRECAUTIONS SHALL BE TAKEN TO AVOID DAMAGE TO ADJACENT PORTIONS OF THE EXISTING BUILDING AND TENANT SPACE. THE CONTRACTOR SHALL BE LIABLE FOR ANY AND ALL DAMAGES AND SHALL EFFECT REPAIRS IMMEDIATELY.

DOGTOPIA DIVISION 3 SPECS:

SECTION 024119 - CONCRETE
A. ALL NEW CONCRETE SHALL HAVE A MIN. 28-DAY STRENGTH OF 2500 PSI. HIGHER STRENGTH CONCRETE MAY BE USED, AT OWNER'S DISCRETION, FOR FINISH AND DURABILITY PURPOSES.
B. CONCRETE POURBACK-3000 PSI 4-INCH-DEPTH, MINIMUM, OR DEPTH REQUIRED TO MEET EXISTING SLAB DEPTH, W/ #4 RE-BAR @ 24-INCH O.C. AND 6-INCH DOWELING EMBEDMENT. PROVIDE VAPOR BARRIER, AS REQUIRED.

DOGTOPIA DIVISION 6 SPECS:

SECTION 061000 - ROUGH CARPENTRY
A. INSTALL ADEQUATE BLOCKING MATCHING ADJACENT FRAMING AND 5/8" CDX PLYWOOD SHEATHING INSTEAD OF GYPSUM BOARD BEHIND ALL PLUMBING FIXTURES, BARRIER-FREE GRAB BARS, SHELVING, AND ALL WALL-MOUNTED COMPUTER EQUIPMENT. REFER TO EQUIPMENT LAYOUT & INTERIOR ELEVATION DRAWINGS FOR LOCATIONS.
B. IF REQUIRED BY THE MUNICIPALITY, ALL WOOD BLOCKING AND BACKING TO BE FIRE-RETARDANT TREATED.
C. NO WOOD OR COMBUSTIBLE MATERIAL SHALL BE USED ABOVE THE SUSPENDED CEILING UNLESS NONCOMBUSTIBLE LUMBER IS USED AND IS SPECIFICALLY ALLOWED BY APPLICABLE BUILDING CODES, THE FIRE MARSHALL AND ALL AGENCIES HAVING JURISDICTION.
D. IF FIRE TREATED WOOD IS REQUIRED FOR FIXTURING ITEMS, THE GENERAL CONTRACTOR IS RESPONSIBLE FOR EXECUTING THIS WORK AS PER BUILDING OFFICIALS' REQUIREMENTS.

SECTION 062023 - INTERIOR FINISH CARPENTRY
A. ALL FINISH AND EXPOSED WOOD SHALL BE KILN DRIED, MILL QUALITY FINISH AND SHALL RECEIVE A FIRE RETARDANT COATING OR TREATMENT IF REQUIRED BY CODE OR THE LOCAL FIRE MARSHALL.

SECTION 064116 - CABINETS
A. THE GENERAL CONTRACTOR IS TO PROVIDE SHOP DRAWINGS OF ALL MILLWORK AND FIXTURES, PRIOR TO START OF CONSTRUCTION, FOR APPROVAL BY THE TENANT'S ARCHITECT.

SECTION 066400 - PLASTIC PANELING
A. REFER TO MATERIAL SCHEDULE FOR COLOR AND FINISH OF FIBERGLASS REINFORCED PLASTIC (FRP) PANELS. MANUFACTURER RECOMMENDED ADHESIVE SHALL BE USED TO MOUNT THE FRP PANELING. MATCHING TRIM SHALL BE INSTALLED AT THE JOINTS, INSIDE CORNERS AND EXPOSED EDGES. ALL SEALANT TO BE APPLIED WITHIN TRIM PRIOR TO INSERTING PANEL. DO NOT APPLY CAULKING AFTER TRIM IS INSTALLED.

DOGTOPIA DIVISION 8 SPECS:

SECTION 081213 - HOLLOW METAL FRAMES
A. SEE DRAWINGS FOR ADDITIONAL INFORMATION. UNLESS OTHERWISE NOTED, REFER TO DOOR AND MASTER MATERIAL SCHEDULE.
B. ALL DOORS AND FRAMES TO BE PAINTED P6 "WEB GRAY"
C. ALL DOORS SHALL BE DESIGNED SO THAT THEY CAN BE TIGHTLY CLOSED ON ALL SIDES TO PREVENT THE ENTRANCES OF INSECTS, BIRDS, AND RODENTS INTO THE FACILITY.

SECTION 081416 - FLUSH WOOD DOORS
A. SEE DRAWINGS FOR ADDITIONAL INFORMATION. UNLESS OTHERWISE NOTED, REFER TO DOOR AND MASTER MATERIAL SCHEDULE.
B. DOORS IN AREAS INTENDED FOR ANIMAL OCCUPANCY TO HAVE A ROUNDED INTERIOR EDGE.
C. ALL DOORS AND FRAMES TO BE PAINTED P6 "WEB GRAY"

SECTION 084113 - ALUMINUM FRAMED ENTRANCES
A. ALL EXISTING TO REMAIN AND NEW BUILDING ENTRY GLASS AND DOORS, STOREFRONT AND INTERIOR GLAZING, IF APPLICABLE, MUST COMPLY WITH ALL APPLICABLE CODES, LANDLORD'S CRITERIA, LANDLORD'S AND TENANT'S CONTRACT DOCUMENTS AND SAFETY GLAZING STANDARDS.
B. GENERAL CONTRACTOR TO VERIFY IN FIELD ALL EXISTING GLAZING TO REMAIN MEETS OR EXCEEDS SUCH CODES, STANDARDS, ETC.. INCLUDING BUT NOT LIMITED TO TYPE, SUPPORT, FRAMING METHODS, ETC.. AND UPGRADE IF OR AS REQUIRED.
C. ALL STOREFRONTS TO BE INSTALLED BY GLAZING SUBCONTRACTORS CAREFULLY FOLLOWING REQUIREMENTS AND DETAILS FOR DESIGN AGAINST WIND LOAD CONSIDERATIONS, EVEN THOUGH SUCH INSTALLATION OF STOREFRONT GLAZING MAY BE IN AN ENCLOSED BUILDING.
D. GENERAL CONTRACTOR TO VERIFY EXISTING STRUCTURAL SUPPORT/ HANGING CONDITIONS FOR STOREFRONT AND IF STRUCTURAL SPANS ABOVE FOR SUCH HANGING EXCEED NORMAL HANGING SUPPORT DETAILS OR SPAN AND / OR WIND LOAD CALCULATIONS ARE REQUIRED DUE TO LOCAL BUILDING DEPARTMENT REQUIREMENTS, THIS CONTRACTOR IS TO HIRE A LOCAL STRUCTURAL CONSULTANT TO DESIGN SUCH SUPPORT SYSTEM HANGERS AND COMPLETE ALL STRUCTURAL CALCULATIONS / DRAWINGS IN THOSE AREAS WHERE SUCH INFORMATION IS REQUIRED.

SECTION 088000 - WINDOWS AND GLAZING
A. PLAYROOM WINDOWS SHALL BE FRAMELESS WHERE PERMITTED BY LOCAL CODE.
B. ALL EXTERIOR WINDOWS WHICH ARE CAPABLE OF BEING OPENED WILL HAVE REMOVABLE SCREENS.
C. ALL GLAZING SHALL BE FREE OF CRACKS, SCRATCHES, CHIPS AND ANY OTHER DEFECTS OR IMPERFECTIONS AND SHALL BE INSTALLED TO PROVIDE A PROPER FIT SO AS NOT TO BIND IN THEIR FRAMES AND TO ALLOW FOR EASE IN REPLACEMENT.

DOGTOPIA DIVISION 9 SPECS:

092900 - GYPSUM WALLBOARD
A. ALL GYPSUM BOARD TO BE FIRE TAPED AND SPACKLED THREE (3) COATS, SANDED AND READY TO RECEIVE PAINT OR WALL COVERING. ALL EXISTING GYPSUM BOARD TO BE REPAIRED TO "LIKE NEW" CONDITION.
B. ALL GYPSUM BOARD TO BE APPLIED VERTICALLY ON WALLS UNLESS OTHERWISE NOTED. ALL GYPSUM WALL BOARD TO BE FIRE RESISTANT AND NONCOMBUSTIBLE AS SPECIFIED BY LOCAL CODES.
C. GYPSUM BOARD SHALL BE SCREWED 16" O.C. AT INTERMEDIATE STUDS AND 8" O.C. AT JOINTS. ALL JOINTS AND CORNERS SHALL BE TAPED AND SMOOTH FINISHED WITH A THREE COAT PROCESS. WHERE FRP BOARD IS TO BE INSTALLED TAPE AND ONE COAT IS SATISFACTORY. GYPSUM BOARD SHALL BE KEPT A MINIMUM OF 1/2" ABOVE THE EXISTING SLAB THROUGHOUT.
D. ALL GYPSUM WALLBOARD (DRYWALL) TO HAVE A LEVEL 4 FINISH.

092216 - NON-STRUCTURAL METAL FRAMING
A. ALL METAL FRAMING, GYPSUM BOARD, PARTITIONS, SOFFITS AND FACADES BY THE GENERAL CONTRACTOR UNLESS OTHERWISE NOTED.
B. ALL NEW INTERIOR PARTITIONS SHALL BE 3-5/8" 20 GA. METAL STUDS @ 16" MIN. O.C. WITH 5/8" GYPSUM BOARD BOTH SIDES, UNLESS NOTED OTHERWISE IN "WALL TYPES" SCHEDULE.

093013 - CERAMIC TILE

A. GENERAL CONTRACTOR TO PROVIDE A SMOOTH CONCRETE SLAB READY FOR INSTALLATION OF FLOOR COVERING AS PER PLANS.
B. REFER TO MATERIAL SCHEDULE FOR FLOOR COVERING SPECIFICATIONS.
C. ALL CERAMIC & QUARRY TILE SHALL BE INSTALLED WITH THIN SET ADHESIVES FURNISHED BY THE TILE MANUFACTURER. ALL TILE SHALL BE INSTALLED IN STRICT ACCORDANCE WITH THE MANUFACTURERS INSTRUCTIONS.
D. ALL FLOOR AND WALL TILE SHALL BE SET IN A MANNER WHICH WILL MINIMIZE CUTTING.
E. ALL FLOOR AND WALL TILE SHALL BE ACID CLEANED AFTER GROUTING
F. PER THE MANUFACTURER'S INSTRUCTIONS. NO SEALANTS SHALL BE APPLIED TO THE TILE.

095000 - CEILINGS
A. ALL CEILINGS SHALL BE UNDERWRITERS APPROVED AND OF THE NON COMBUSTIBLE TYPE. SEE CEILING SPECIFICATION WITHIN THE CONTRACT DOCUMENTS

095113 - SUSPENDED CEILINGS
A. SUSPENDED CEILINGS SHALL BE INSTALLED IN ACCORDANCE W/ CURRENT IBC, AMERICAN SOCIETY OF TESTING MATERIALS C635 & C636 AS WELL AS AMERICAN SOCIETY OF CIVIL ENGINEERS 7-02 & CEILING AND INTERIOR SYSTEMS CONSTRUCTION ASSOCIATION.
B. A SUSPENDED CEILING T-BAR SYSTEM SHALL BE PROVIDED BY THE GENERAL CONTRACTOR. THE SYSTEM SHALL HAVE A CLASS "A" RATING AND SHALL BE A "SNAP-GRID" SYSTEM.
C. ALL CEILINGS MUST BE INSTALLED AT 90 DEGREES TO THE DEMISING WALLS. DIAGONAL PATTERNS ARE NOT ALLOWED. REFER TO REFLECTED CEILING PLAN FOR CEILING HEIGHTS

099000 - PAINT
A. ALL PAINT SHALL BE EGGSHELL OR SEMIGLOSS FINISH UPON DRYING REFER TO MATERIAL SCHEDULE.
B. NEW WALL SURFACES SHALL RECEIVE ONE PRIMER COAT AND TWO FINISH COATS. PAINT SHALL BE APPLIED IN ACCORDANCE WITH THE MANUFACTURER'S RECOMMENDATIONS AND SHALL PROVIDE A SMOOTH,
C. CLEANABLE, FINISHED SURFACE WITH UNIFORM COLOR THROUGHOUT.
D. ALL NEW AND EXISTING INTERIOR SURFACES TO BE PAINTED/ REPAINTED AS NOTED ON THE PARTITION & FINISH PLAN.

DOGTOPIA DIVISION 10 SPECS:

SECTION 101400 - SIGNAGE
A. REQUIRES SEPARATE PERMIT BY OTHERS, REVIEW & APPROVAL PRIOR TO INITIATING SUCH WORK.
B. ACCESSIBLE SIGNAGE MOUNTING HEIGHTS AND LOCATIONS PER PLANS.
C. EXTERIOR SIGNAGE:
   1. PRE-FABRICATED AND PRE-FINISHED CUSTOM MANUFACTURED SIGNAGE SHALL BE FURNISHED AND INSTALLED BY THE OWNER/ OWNER'S SIGN VENDOR.
   2. SIGNAGE SHALL BE PURCHASED FROM AN APPROVED SIGNAGE VENDOR.
   3. ALL CENTERS SHALL HAVE A MINIMUM OF ONE STOREFRONT FASCIA SIGN (UNLESS OTHERWISE RESTRICTED BY MUNICIPALITY OR LANDLORD).
   4. SECONDARY BUILDING SIGNAGE IS DEFINED AS SIGNAGE INSTALLED ANYWHERE ON THE BUILDING OTHER THAN THE STOREFRONT.
   5. ALL SIGNS IN CUSTOMER VIEW MUST BE IN GOOD REPAIR WITH ALL LIGHTS FUNCTIONING.
   6. ALL SIGNS MUST COMPLY WITH DOGTOPIA'S BRAND ESSENCE GUIDE. CONTACT DOGTOPIA ENTERPRISES, LLC SUPPORT OFFICE FOR GUIDE.
   7. IT IS THE SIGNAGE MANUFACTURER'S RESPONSIBILITY TO ENSURE THE SIGNAGE IS DESIGNED, CONSTRUCTED, ATTACHED AND INSTALLED IN STRICT ACCORDANCE WITH ALL APPLICABLE BUILDING CODES AND ORDINANCES.
   8. SIGNAGE MANUFACTURER TO PROVIDE DRAWINGS OF SIGNAGE ON STOREFRONT AND COLOR RENDERING OF SIGNAGE.
D. SPECIALTY SIGNAGE AND GRAPHICS:
   1. SPECIALTY SIGNAGE IS DEFINED AS ANY SIGN THAT DOES NOT MEET THE CURRENT CRITERIA FOR STORE FRONT, SECONDARY OR STREET SIGNAGE. SPECIALTY SIGNAGE PLANS AND/ OR DRAWINGS FOR EACH SIGN MUST BE SUBMITTED TO DOGTOPIA ENTERPRISES, LLC FOR WRITTEN APPROVAL BEFORE SIGN CONSTRUCTION AND ILLUSTRATION.
   2. SPECIALTY SIGNS MUST BE MANUFACTURED BY AN APPROVED DOGTOPIA ENTERPRISES, LLC VENDOR UNLESS PRIOR WRITTEN APPROVAL IS GRANTED.
E. INTERIOR SIGNAGE:
   1. INTERIOR SIGN MUST BE MANUFACTURED BY AN APPROVED DOGTOPIA ENTERPRISES, LLC VENDOR.
   2. SIGN FOR OTHER THAN DIRECT BUSINESS PURPOSES ARE PROHIBITED.

SECTION 101700 - TELEPHONE AND DATA
A. THE GENERAL CONTRACTOR/ ELECTRICAL SUBCONTRACTOR SHALL INSTALL THE COMPLETE ELECTRICAL AND COMPUTER DATA WIRING SYSTEM WITH ALL THE NECESSARY RACEWAYS / CONDUIT AND ALL THE NECESSARY RELATED ACCESSORIES FOR A COMPLETE, FUNCTIONING SYSTEM APPROVED BY DOGTOPIA ENTERPRISES, LLC AND THE TELEPHONE EQUIPMENT SUPPLIER.
B. THE CONTRACTOR SHALL OBTAIN, DIRECTLY FROM DOGTOPIA ENTERPRISES, LLC, ALL INSTALLATION INSTRUCTIONS PERTAINING TO THE DOGTOPIA ENTERPRISES, LLC COMPUTER/ TELEPHONE SYSTEM SPECIFICATIONS.
C. THE CONTRACTOR SHALL COORDINATE THE WORK INDICATED ON THE DRAWINGS WITH THE COMPUTER/ TELEPHONE INSTALLATION CONTRACTOR FROM DOGTOPIA ENTERPRISES, LLC. IF DISCREPANCIES EXIST, THE DOGTOPIA ENTERPRISES, LLC INSTALLATION DIRECTIONS SHALL TAKE PRECEDENCE.
D. ALL INSTALLATION CONCEPTS SHALL BE APPROVED BY THE OWNER PRIOR TO INSTALLATION.
E. IT IS THE CONTRACTORS RESPONSIBILITY TO INSTALL FIXTURES IN COMPLIANCE WITH LOCAL JURISDICTION CODES AND REQUIREMENTS

SECTION 104416 - FIRE EXTINGUISHERS
A. MINIMUM 2A10BC FIRE EXTINGUISHERS SHALL BE INSTALLED IN CONSPICUOUS LOCATIONS THROUGHOUT TENANT SPACE.
B. ALL FIRE EXTINGUISHERS SHALL BE PROPERLY TAGGED AND MOUNTED.
C. ALL FIRE EXTINGUISHERS SHALL REMAIN IN CLEAR VIEW AND SHALL NOT BE OBSTRUCTED AT ANY TIME.
D. FIRE EXTINGUISHERS SHALL BE INSTALLED NO HIGHER THAN 5' (AT HANDLE) AND NO LESS THAN 4" ABOVE FINISHED FLOOR.

DOGTOPIA DIVISION 12 SPECS:

SECTION 123216 - MANUFACTURED PLASTIC-LAMINATE FACED CASEWORK
A. THE CONTRACTOR SHALL FABRICATE AND INSTALL CUSTOM COUNTERS SPECIFIED BY DOGTOPIA ENTERPRISES, LLC, INCLUDING BUT NOT LIMITED TO LOBBY RECEPTION COUNTER, BAR COUNTER, DOG FOOD PREP AREA, LAUNDRY COUNTER, AND PLAYROOM STORAGE.

DOGTOPIA DIVISION 22 SPECS:

SECTION 220000 - PLUMBING
A. SEE PLUMBING SHEETS FOR PLUMBING REQUIREMENTS.
B. IT IS THE CONTRACTORS RESPONSIBILITY TO INSTALL FIXTURES IN COMPLIANCE WITH LOCAL JURISDICTION CODES, AND REQUIREMENTS.

DOGTOPIA DIVISION 23 SPECS:

SECTION 230000 - HEATING, VENTILATION AND AIR CONDITIONING
A. SEE MECHANICAL SHEETS FOR HVAC REQUIREMENTS.
B. IT IS THE CONTRACTORS RESPONSIBILITY TO INSTALL FIXTURES IN COMPLIANCE WITH LOCAL JURISDICTION CODES, AND REQUIREMENTS.

DOGTOPIA DIVISION 26 SPECS:

SECTION 260000 - ELECTRICAL
A. SEE ELECTRICAL SHEETS FOR ELECTRICAL REQUIREMENTS.
B. IT IS THE CONTRACTORS RESPONSIBILITY TO INSTALL FIXTURES IN COMPLIANCE WITH LOCAL JURISDICTION CODES, AND REQUIREMENTS.

SECTION 265000 - LIGHTING
A. APPROVED LIGHTING TO BE DESCRIBED IN LIGHTING PLAN AND SCHEDULE.

KURT L. SCHMITZ
LICENSED ARCHITECT
No.51649
STATE OF MINNESOTA

ARCHITECTS, INC.
17710 Detroit Avenue Lakewood, Ohio 44107
Phone (216) 521-5134 Fax (216) 521-4824
www.adaarchitects.cc

dogtopia

DOGTOPIA
2017 WOODLYNN AVENUE
MAPLEWOOD, MN 55109

This document ("Instrument of Service") was prepared by ADA Architects, Inc. ("ADA") specifically for the referenced project and is not intended for any other use. ADA retains all common law, statutory and other reserved rights, including copyrights. This Instrument of Service shall not be used on other projects, for additions to this project or for completion of this project by others without ADA's prior written consent. Any unauthorized use of this Instrument of Service shall be at the User's sole risk and without liability to ADA. ADA makes no warranties, express or implied, of merchantability or of fitness for a particular purpose.

FRANCHISEE
LANG, BERT LLC

REVISIONS

#	DATE	TYPE
1		
2		
3		
4		
5		

GENERAL NOTES

DATE 03/23/20
JOB NO. 19492

A0.2
SHEET NO.

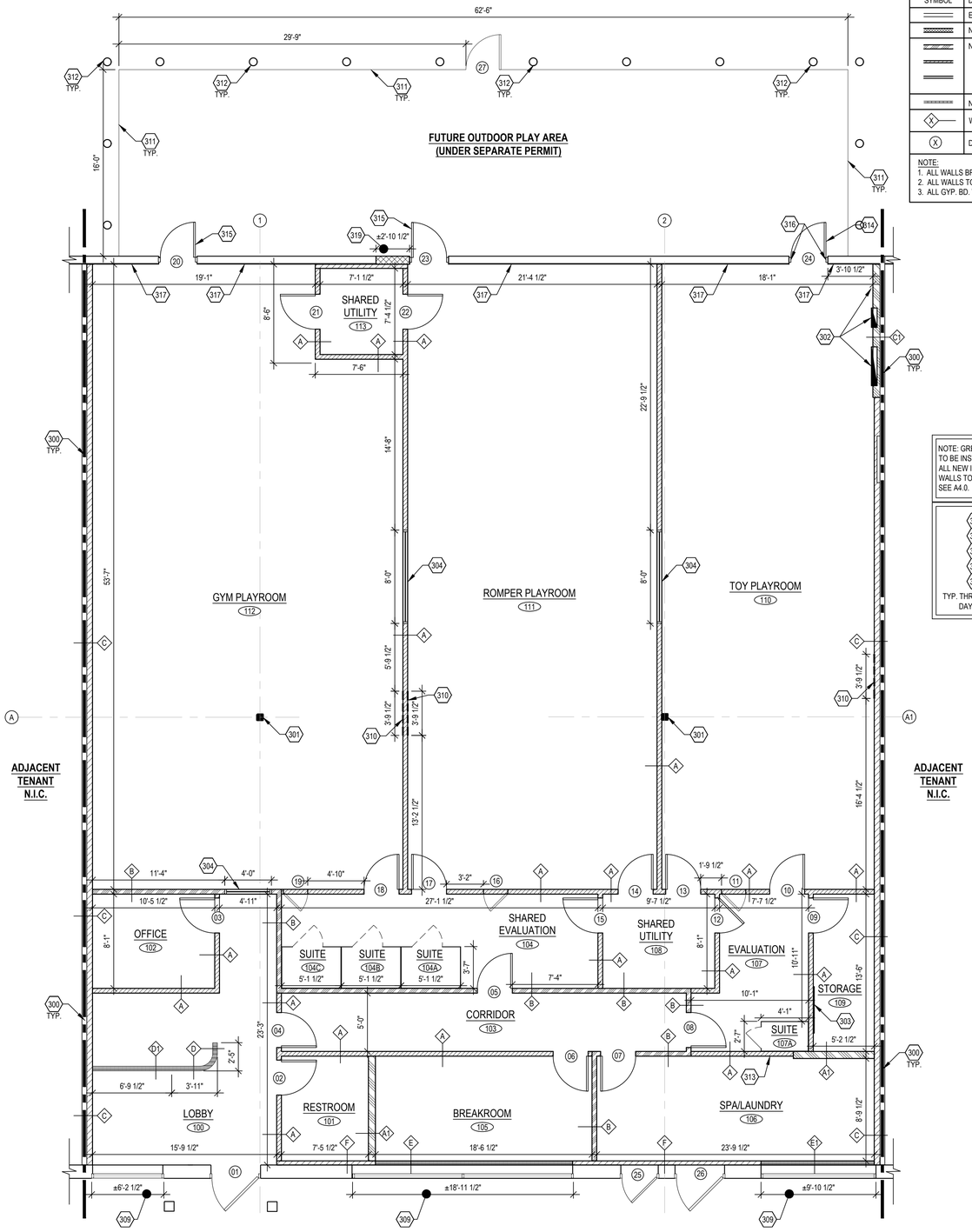

FLOOR PLAN

SCALE 3/16" = 1'-0"

WALL LEGEND

SYMBOL	DESCRIPTION
	EXISTING WALL
	NEW MASONRY WALL INFILL. SEE SHEET A4.0 FOR ADDITIONAL INFORMATION.
	NEW STUD WALL. SEE WALL TYPES, SHEET A4.0, FOR ADDITIONAL INFORMATION.
	NEW PARTIAL HEIGHT STUD WALL. SEE WALL TYPES, SHEET A4.0, FOR ADDITIONAL INFORMATION.
X	WALL TYPE DESIGNATION. SEE SHEET A4.0 FOR ADDITIONAL INFORMATION
X	DOOR TYPE DESIGNATION. SEE SHEET A5.0 FOR ADDITIONAL INFORMATION

NOTE:
1. ALL WALLS BRACED TO STRUCTURE ABOVE @ 4'-0" O.C. MAX.
2. ALL WALLS TO BE PAINTED TO 6" ABOVE CEILING, TO UNDERSIDE OF DECK (IF CEILING IS OPEN TO STRUCTURE)
3. ALL GYP. BD. WALLS TO HAVE GREEN BOARD INSTALLED FOR FIRST 48" ABOVE FINISHED FLOOR.

FLOOR PLAN NOTES

1. REFER TO GENERAL NOTES ON SHEET A0.2 FOR ADDITIONAL INFORMATION
2. GENERAL CONTRACTOR TO VISIT SITE AND VERIFY EXISTING CONDITIONS PRIOR TO SUBMITTING PROPOSALS AND COMMENCING WORK.
3. GENERAL CONTRACTOR IS TO PROVIDE FULL TIME SUPERVISION OF PROJECT. NOTIFY ADA PROJECT MANAGER OF TYPICAL WORK HOURS.
4. GENERAL CONTRACTOR IS RESPONSIBLE FOR UNLOADING AND HANDLING ALL OWNER SUPPLIED MATERIAL AND DISPOSAL OF ALL PACKING MATERIALS AT THE JOB SITE.
5. GENERAL CONTRACTOR SHALL BE RESPONSIBLE FOR QUALITY AND FIT OF ALL MATERIALS, INCLUDING, BUT NOT LIMITED TO, ALL REFURBISHED MATERIALS. ALL REFURBISHED MATERIALS TO APPEAR NEW.
6. IF THE CONTRACTOR CONSIDERS ANY SURFACE UNSUITABLE FOR A PROPER FINISH, HE OR SHE SHALL NOTIFY ARCHITECT OF THE CONDITION AND NOT COMMENCE WORK UNTIL DIRECTED BY ARCHITECT.
7. GENERAL CONTRACTOR TO NOTIFY OWNER OF ANY DAMAGES/ SHORTAGES WITHIN 48 HOURS OF RECEIPT OR BEAR RESPONSIBILITY FOR REPLACEMENT OF SUCH.
8. ALL WORK SHALL BE PERFORMED IN STRICT ACCORDANCE WITH THE PUBLISHED INSTALLATION SPECIFICATIONS AND PROCEDURES OF THE MANUFACTURER OF THE MATERIAL USED.
9. PROTECT OTHER WORK AND MERCHANDISE AS REQUIRED TO PREVENT ANY DAMAGE.
10. PROVIDE A CLEAN SMOOTH CONCRETE SURFACE FOR PROPER INSTALLATION OF ALL FLOOR FINISHES.
11. APPLICATIONS OF PAINT SHALL BE ONE COAT PRIMER AND TWO COATS PAINT (U.N.O.). PRIMER SHALL BE SPECIFIED OR RECOMMENDED BY PAINT MANUFACTURER.
12. ALL ADHESIVES TO BE SUPPLIED BY GENERAL CONTRACTOR. THE TYPE TO BE USED AS RECOMMENDED BY WALL COVERING MANUFACTURER SELECTED FOR THE TYPE OF INSTALLATION.
13. GENERAL CONTRACTOR SHALL BE RESPONSIBLE TO INSPECT ALL WALL COVERING FOR QUALITY AND DEFECTS PRIOR TO INSTALLATION.
14. ALL SURFACES TO RECEIVE FABRIC OR WALL COVERING AS SELECTED SHALL BE PROPERLY PREPARED AND SIZED AS RECOMMENDED BY WALL COVERING MANUFACTURER SELECTED FOR THE TYPE OF INSTALLATION. CONTRACTOR SHALL NOTIFY ADA OF ANY SURFACE NOT SUITABLE FOR PROPER APPLICATION OF WALL COVERING. DO NOT APPLY ANY MATERIAL UNTIL SITUATION IS RESOLVED.
15. GENERAL CONTRACTOR IS RESPONSIBLE FOR INSTALLATION OF BLOCKING FOR ALL WALL AND CEILING SUPPORTED ITEMS IN STORE. REVIEW ITEMS THOROUGHLY. COORDINATE WITH VENDOR AS NECESSARY.
16. GENERAL CONTRACTOR TO ENSURE TIGHT, SECURE, AND PROPER FASTENING OF ALL STANDARDS TO METAL STUDS.
17. ALL DIMENSIONS ARE FROM FACE OF GYP. BD. U.N.O.
18. ALL INTERIOR DOORS ARE 4" OFF WALL U.N.O.
19. ALL EXPOSED WALLS TO UNDERSIDE OF STRUCTURE SHALL BE BUILT TIGHTLY AROUND STRUCTURE, PIPING, ETC.

KEY NOTES

300. LOCATION OF LEASE LINE (LOCATED @ CENTER LINE OF DEMISING WALL).
301. EXISTING STEEL COLUMN. PREP AND PAINT. SEE SHEET A1.3 FOR FINISHES.
302. LOCATION OF ELECTRICAL PANELS AND EQUIPMENT. MAINTAIN A 3'-0" CLEARANCE IN FRONT OF ELECTRICAL EQUIPMENT - REFER TO ELECTRICAL DRAWINGS FOR ADDITIONAL INFORMATION.
303. 4'-0" X 4'-0" FIRE RATED PLYWOOD TO HOUSE ALL ELECTRICAL AND OWNER'S EQUIPMENT - REFER TO ELECTRICAL DRAWINGS FOR ADDITIONAL INFORMATION. IT RACK TO BE MOUNTED TO PHONE BOARD AT 7'-0" A.F.F. MIN.
304. 4'-0" HIGH WINDOW. SEE DETAIL 1/A4.0 FOR ADDITIONAL INFORMATION.
305. SEE FIXTURE PLAN ON A1.2 FOR FIXTURE LAYOUT & ADDITIONAL NOTES.
306. SEE FINISH PLAN ON A1.3 FOR ALL FLOOR AND WALL FINISHES.
307. EXISTING CONCRETE SLAB - PATCH AND REPAIR TO ENSURE A SMOOTH AND LEVEL SLAB, PREP. SLAB TO RECEIVE NEW FINISHES. SEE SHEET A1.3 FOR ADDITIONAL INFORMATION.
308. REUSED / EXISTING MATERIALS AND EQUIPMENT TO BE IN OPERATING CONDITION OR SPECIFY THE COST TO SUPPLY / INSTALL IN BID. GENERAL CONTRACTOR WILL BE HELD RESPONSIBLE FOR ANY COSTS ASSOCIATED WITH REPAIR / REPLACEMENT OF EXISTING / REUSED ITEMS.
309. EXISTING STOREFRONT TO REMAIN. TOUCH-UP FINISHES AS NEEDED.
310. INSTALL BLOCKING WITHIN WALL FOR ADDITIONAL SUPPORT TO WALL MOUNTED FIXTURES AS DIMENSIONED. SEE A1.2 FOR FIXTURES AND ADDITIONAL INFORMATION.
311. VINYL FENCING AROUND OUTDOOR PLAY AREA. MAX GAP BETWEEN BUILDING EIFS AND VINYL FENCING TO BE 1".
312. 6"Ø STEEL PIPE BOLLARD. SEE DETAIL 10/A4.0 FOR ADDITIONAL INFORMATION.
313. INSTALL BLOCKING AT HIGH POINT OF WALL FOR ELECTRICAL CORD REEL. COORDINATE WITH ELECTRICAL DRAWINGS.
314. NEW H.M. DOOR IN NEW MASONRY OPENING REFER TO STRUCTURAL DRAWINGS AND DOOR SCHEDULE ON SHEET A5.0 FOR ADDITIONAL INFORMATION.
315. EXISTING H.M. DOOR TO BE REPLACED WITH NEW. REFER TO DOOR SCHEDULE ON SHEET A5.0 FOR ADDITIONAL INFORMATION.
316. PATCH / REPAIR EXISTING WALL SURFACE AT AREAS OF DEMOLITION. ALL REPAIRS TO MATCH / ALIGN WITH EXISTING WALL SURFACES TYP.
317. PATCH / REPAIR EXISTING WALL TO REMAIN. ALL REPAIRS TO MATCH / ALIGN WITH EXISTING WALL SURFACES TYP.
318. GREENBOARD TO 48" A.F.F
319. PARTIALLY INFILL EXISTING OPENING. SEE STRUCTURAL DRAWINGS FOR MORE INFORMATION.

KURT L. SCHMITZ
LICENSED ARCHITECT
No.51649
MINN

ADA ARCHITECTS, INC.
17710 Detroit Avenue Lakewood, Ohio 44107
Phone (216) 521-5134 Fax (216) 521-4824
www.adaarchitects.cc

dogtopia

DOGTOPIA

MAPLEWOOD, MN 55109

2017 WOODLYNN AVENUE

This document ("Instrument of Service") was prepared by ADA Architects, Inc. ("ADA") specifically for the referenced project and is not intended for any other use. ADA retains all common law, statutory and other reserved rights, including copyrights. This Instrument of Service shall not be used on other projects, for additions to this project or for completion of this project by others without ADA's prior written consent. Any unauthorized use of this Instrument of Service shall be at the user's own risk and without liability to ADA. ADA makes no warranties, express or implied, of merchantability or of fitness for a particular purpose.

FRANCHISEE

LANG, BERT LLC

REVISIONS

#	DATE	TYPE
1		
2		
3		
4		
5		

FLOOR PLAN

DATE 03/23/20

JOB NO. 19492

A1.1

SHEET NO.

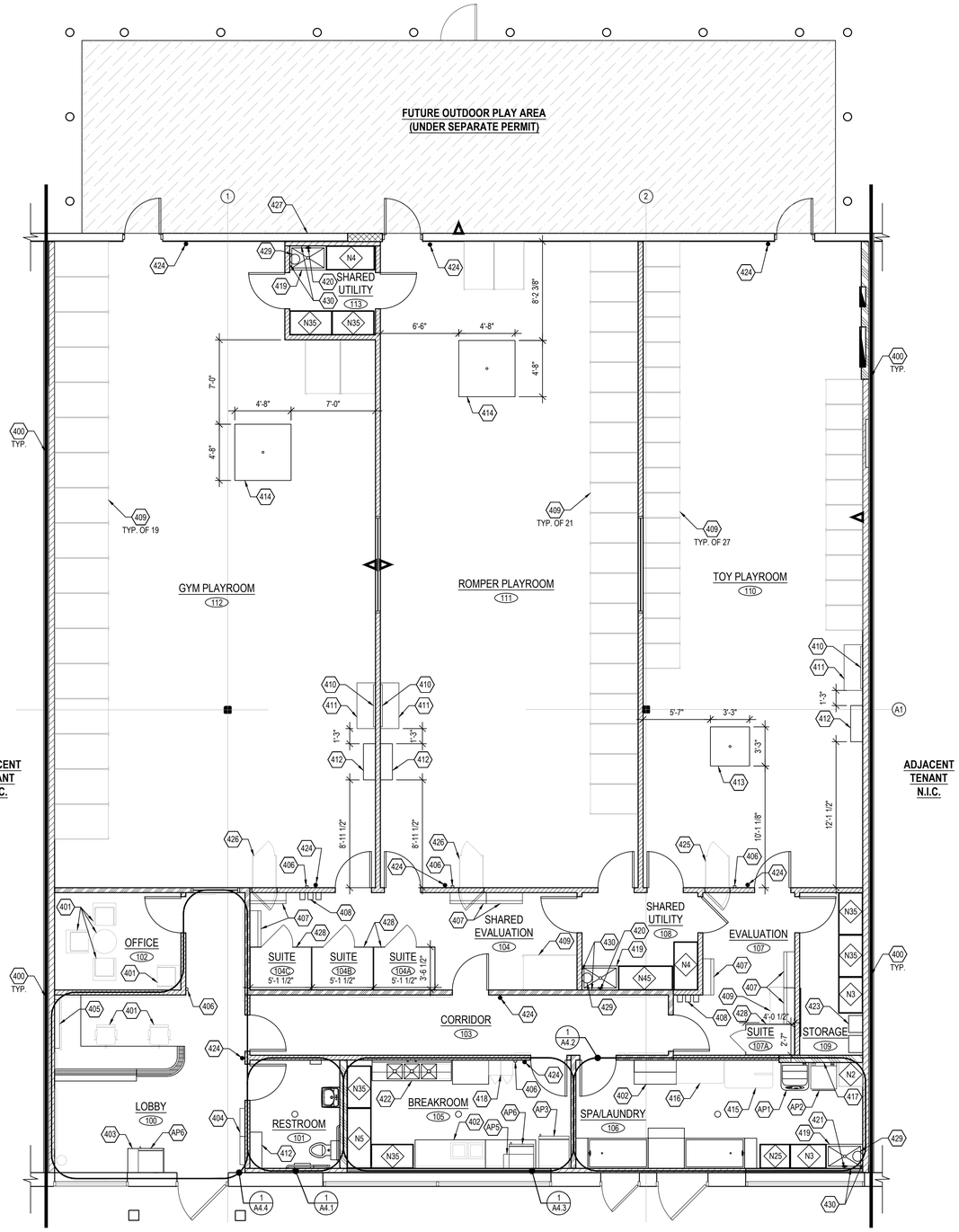

FIXTURE PLAN

SCALE 3/16" = 1'-0"

GENERAL NOTES

1. REFER TO GENERAL NOTES ON SHEET A0.2 FOR ADDITIONAL INFORMATION
2. GENERAL CONTRACTOR TO VISIT SITE AND VERIFY EXISTING CONDITIONS PRIOR TO SUBMITTING PROPOSALS AND COMMENCING WORK.
3. GENERAL CONTRACTOR TO PROVIDE NON-COMBUSTIBLE CEILING AND WALL BLOCKING AS NECESSARY.
4. GENERAL CONTRACTOR TO FIELD SURVEY AND COORDINATE ACCESS OF ALL MILLWORK WITH ARCHITECT.
5. ONLY GRAPHIC REPRESENTATIONS OF FIXTURES ARE SHOWN. ALL DIMENSIONS ARE APPROXIMATE. COORDINATE WITH ARCHITECT AND FRANCHISEE AND FOLLOW ALL GOVERNING CODES FOR FINAL LOCATIONS AND PLACEMENT.
6. REFER TO SHEET A0.0 FOR OWNER PROVIDED ITEMS.

⬡ APPLIANCES - G.C. TO VERIFY WITH OWNER

APPLIANCES LISTED ARE DOGTOPIA STANDARD MODELS, FOR BIDDING PURPOSES ONLY. G.C. TO PROVIDE LIST OF APPLIANCES TO OWNER, DOGTOPIA, AND ARCHITECT **PRIOR TO PLACING ORDER**.

AP1. WASHING MACHINE, MAYTAG MVWX655DW IN WHITE.
AP2. DRYER, MAYTAG MEDX655DW IN WHITE.
AP3. REFRIGERATOR, FRIGIDAIRE FFTR2021TS (WITH ICE MAKER).
AP4. NOT USED.
AP5. MICROWAVE, FRIGIDAIRE FGMV176NTF 1000W.
AP6. MINI - REFRIGERATOR, HAIER HC46SF10SV.

⬡ KEY NOTES

400. LOCATION OF LEASE LINE (LOCATED @ CENTER LINE OF DEMISING WALL).
401. FURNITURE PROVIDED BY OWNER. SEE SHEET A0.0 FOR ADDITIONAL INFORMATION.
402. CABINETRY. SEE ENLARGED PLANS FOR ADDITIONAL INFORMATION.
403. BEVERAGE BAR, SEE DETAIL E/A4.4.
404. DIGITAL MENU SCREEN, SEE DETAIL 4/A4.4 AND ELECTRICAL DRAWINGS FOR ADDITIONAL INFORMATION.
405. LOBBY MOUNTED PLAYROOM MONITOR, SEE DETAIL 5/A4.4 AND ELECTRICAL DRAWINGS FOR ADDITIONAL INFORMATION.
406. HAND SANITIZER DISPENSER BY PURELL, H-2288.
407. QUANTUM STORAGE LOUVERED PANEL QLP-3619-230-18CL WITH **18 BINS** IN CLEAR FROM MSC INDUSTRIAL DIRECT CO. ITEM#: 646106694. MOUNT BOTTOM OF PANEL AT 48" A.F.F. (ITEM HAS LONG LEAD TIME).
408. (3) RACOR 00525 LADDER HOOKS. MOUNT HOOKS AT 67" A.F.F., 12" APART FROM ONE ANOTHER.
409. APPROXIMATE LOCATION OF DOG CRATE. BY OWNER, SEE SHEET A0.0.
410. IN-PLAYROOM MONITOR, SEE DETAIL 3/A4.4 AND ELECTRICAL DRAWINGS FOR ADDITIONAL INFORMATION.
411. WALL MOUNTED FOLDING TABLE. MODEL: SP4HFTA BY TOW-RAX.
412. 3'-0" WIDE UPPER CABINET, SEE DETAIL 1/A1.2.
413. SMALL POTTY PLATFORM, SEE DETAIL 8/A4.0 AND PLUMBING DRAWINGS FOR ADDITIONAL INFORMATION.
414. LARGE POTTY PLATFORM, SEE DETAIL 8/A4.0 AND PLUMBING DRAWINGS FOR ADDITIONAL INFORMATION.
415. HYDRAULIC GROOMING TABLE. BY OWNER, SEE SHEET A0.0.
416. DRYING CRATES/GROOMING KENNEL. BY OWNER, SEE SHEET A0.0.
417. DRYING RACK MOUNTED AT 5'-0". RACK TO BE WOOLITE ALUMINUM 36" COLLAPSIBLE WALL MOUNTED CLOTHES DRYING RACK, IN SILVER.
418. (2) LOCKERS, GLOBAL INDUSTRIES WGB967082.
419. 3'x2' MOP SINK. SEE PLUMBING DRAWINGS.
420. GC TO INSTALL 2-PRODUCT SOLUTION MIXER BY HT PRODUCTS AT MOP SINK. PROVIDED BY OWNER, SEE SHEET A0.0. (BOTTOM OF DISPENSER AT 36" A.F.F.).
421. GC TO INSTALL 4-PRODUCT SOLUTION MIXER BY HT PRODUCTS AT MOP SINK. PROVIDED BY OWNER, SEE SHEET A0.0. (BOTTOM OF DISPENSER AT 36" A.F.F.).
422. BREAK ROOM SINK, SEE PLUMBING DRAWINGS AND SHEET A4.3.
423. WALL MOUNTED INSTANT WATER HEATER, MOUNT AS CLOSE TO CEILING AS POSSIBLE. SEE PLUMBING DRAWINGS FOR ADDITIONAL INFORMATION.
424. MIN. 2A10BC FIRE EXTINGUISHER. MOUNT WITH A MARINE -OR- VEHICLE RATED BRACKET (BUCKEYE #472700287 OR EQUAL) NO HIGHER THAN 4'-6" A.F.F., MAXIMUM TRAVEL DISTANCE OF 75'. CONTRACTOR TO VERIFY FINAL LOCATIONS WITH FIRE MARSHAL.
425. DOG CRATE. ZINGER DELUXE 4000 FRONT BACK ENTRY WITH LOCKING ZINGER CASTERS, SEE DETAIL 2/A1.2.
426. DOG CRATE. ZINGER DELUXE 5000 FRONT BACK ENTRY WITH LOCKING ZINGER CASTERS, SEE DETAIL 2/A1.2.
427. HOSE BEIL AT EXTERIOR HOSE BIB. REAL TO BE LIBERTY 703.
428. G.C. TO SUPPLY AND INSTALL NEW PREFAB CUSTOM KENNEL. KENNEL TO BE SNYDER, FINISH: FORMICA FOG MATTE FINISH 961. CAULK ALL SEAMS PER SNYDER SPECIFICATIONS.
429. EYE WASH STATION. REFER TO PLUMBING DRAWINGS FOR ADDITIONAL INFORMATION.
430. DURAGUARD SS WALL GUARD FOR MOP SINK, BY MUSTEE.

◇ NEXEL SHELVING

GC TO ORDER ALL SHELVING FROM NEXEL. ALL SHELVING WIRE RACKS TO BE STANDARD MODEL, 24" WIDE x 74" TALL. RACKING IN DRY AREAS TO BE ORDERED IN CHROME FINISH. RACKING IN WET AREAS (NEXT TO MOP SINKS) TO BE BLACK EP FINISH, SEE PLAN FOR VARYING LENGTHS.

N2.	2'-0" (24") LENGTH
N25.	2'-6" (30") LENGTH
N3.	3'-0" (36") LENGTH
N35.	3'-6" (42") LENGTH
N4.	4'-0" (48") LENGTH
N45.	4'-6" (54") LENGTH
N5.	5'-0" (60") LENGTH
N55.	5'-6" (66") LENGTH
N6.	6'-0" (72") LENGTH

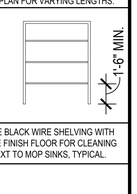

NOTE: GC TO ASSEMBLE BLACK WIRE SHELVING WITH FIRST SHELF 1'-6" ABOVE FINISH FLOOR FOR CLEANING BUCKET STORAGE NEXT TO MOP SINKS, TYPICAL.

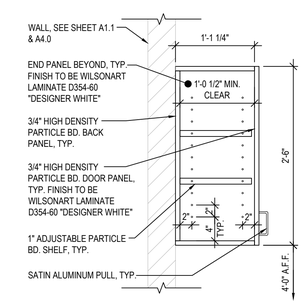

1 / A1.2 UPPER WALL CABINET
SCALE: 1" = 1'-0"

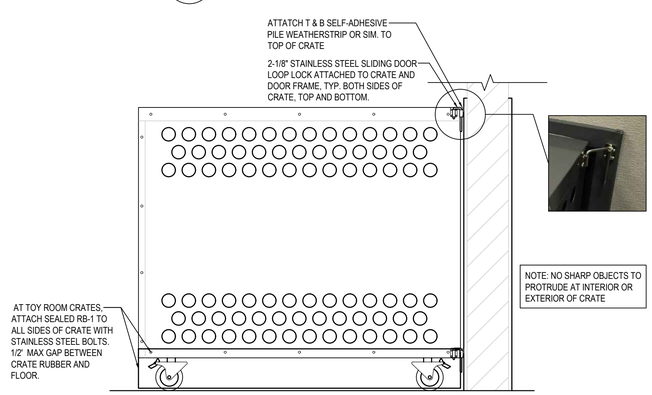

NOTE: NO SHARP OBJECTS TO PROTRUDE AT INTERIOR OR EXTERIOR OF CRATE

2 / A1.2 THROUGH-WALL DOG CRATE ELEVATION
SCALE: 1-1/2" = 1'-0"

KURT L. SCHMITZ
LICENSED ARCHITECT
No.51649
MINN.

ARCHITECTS, INC.
17710 Detroit Avenue Lakewood, Ohio 44107
Phone (216) 521-5134 Fax (216) 521-4824
www.adaarchitects.cc

dogtopia

DOGTOPIA

MAPLEWOOD, MN 55109

2017 WOODLYNN AVENUE

This document ("Instrument of Service") was prepared by ADA Architects, Inc. ("ADA") specifically for the referenced project and is not intended for any other use. ADA retains all common law, statutory and other reserved rights, including copyrights. This Instrument of Service shall not be used on other projects, for additions to this project or for completion of this project by others without ADA's prior written consent. Any unauthorized use of this Instrument of Service shall be at the user's sole risk and without liability to ADA. ADA makes no warranties, express or implied, of merchantability or of fitness for a particular purpose.

FRANCHISEE
LANG, BERT LLC

REVISIONS

#	DATE	TYPE
1		
2		
3		
4		
5		

FIXTURE PLAN

DATE 03/23/20
JOB NO. 19492

A1.2
SHEET NO.

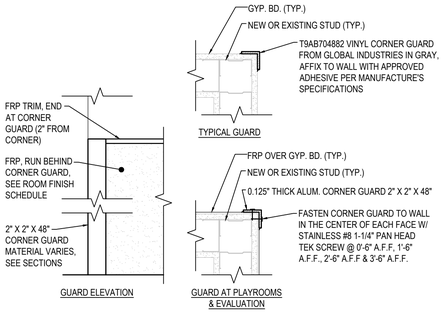

2 A1.3 CORNER GUARD DETAIL
SCALE: 1-1/2" = 1'-0"

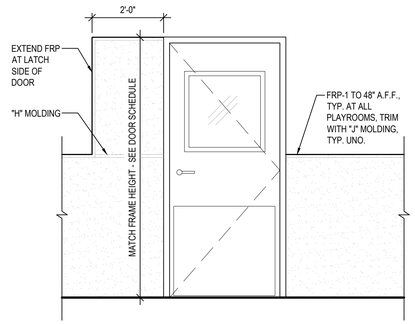

1 A1.3 FRP AT PLAYROOM DOORS
SCALE: 1/2" = 1'-0"

COLOR SCHEDULE

KEY	COLOR
P1	SW6890 "OSAGE ORANGE"
P2	SW6950 "CALYPSO"
P3	SW7074 "SOFTWARE"
P4	SW7661 "REFLECTION"
P7	SW6807 "WONDROUS BLUE"
P8	SW6772 "CAY"
NO	**PRIME WALL ONLY (W-1)** - GRAPHICS TO BE INSTALLED

THIS CHART TO BE IDENTIFIED ON PLAN & DISTRIBUTED BY WEEK 1 OF CONSTRUCTION

FINISH SCHEDULE

MILLWORK FINISHES SHOWN ON A4 SERIES DETAIL SHEETS

KEY		MATERIAL	MFR.	MODEL #	COLOR	REMARKS
WALL FINISH	W-1	PAINT - PRIMER	ZINSSER BULLS EYE	WATER BASED, INTERIOR / EXTERIOR	1-2-3 WHITE	PRIMER FOR GYP. BD. WALLS **(PRIMER SHALL BE 1.0-2.0 MILS FOR GRAPHICS PREPARATION - TWO COATS ARE REQUIRED TO ACHIEVE REQUIRED THICKNESS)**
	W-2	PAINT	SHERWIN - WILLIAMS	PROMAR 200 (0 VOC) EGGSHELL FINISH	SEE COLOR SCHEDULE. TO BE DISTRIBUTED BY WEEK 1 OF CONSTRUCTION	PAINT FOR GYP. BD. WALLS
	W-3	PAINT	SHERWIN - WILLIAMS	PROMAR 200 (0 VOC) SEMI-GLOSS FINISH	SEE COLOR SCHEDULE. TO BE DISTRIBUTED WEEK 1 OF CONSTRUCTION	PAINT FOR GYP. BD. WALLS
	W-4	PAINT -PRIMER	SHERWIN - WILLIAMS	PREPRITE PROBLOCK PRIMER	WHITE	PRIMER FOR PAINTED MASONRY WALLS
	W-5	PAINT -PRIMER	SHERWIN - WILLIAMS	PROMAR BLOCK FILLER	WHITE	PRIMER FOR UNPAINTED MASONRY WALLS
	W-6	PAINT	SHERWIN - WILLIAMS	PRO INDUSTRIES WATERBASED ALKYD URETHANE SEMI-GLOSS	#SW7075 "WEB GRAY"	PAINT FOR DOORS AND FRAMES
	W-7	PAINT	SHERWIN - WILLIAMS	PRO INDUSTRIES WATERBASED ALKYD URETHANE SEMI-GLOSS	#SW7075 "WEB GRAY"	PAINT FOR ALL EXPOSED COLUMNS
	FRP-1	FIBER REINFORCED PLASTIC (FRP)	CRANE COMPOSITES	GLASBOARD FIBERGLASS REINFORCED PANEL WITH SURFASEAL - EMBOSSED	PEARL GRAY - PEBBLE EMBOSSED FINISH	PROVIDE PVC TRIM MOLDING AT WALL BASE, DIVISION SEAMS, INSIDE AND OUTSIDE CORNERS AND EDGES. MITER TRIM AT ALL CORNERS AND CAULK ALL EXPOSED EDGES OF MOLDINGS. COMPLETELY SEAL WITH TITEBOND ULTIMATE MP SELANT IN "CLEAR".
	FRP-2	FIBER REINFORCED PLASTIC (FRP)	CRANE COMPOSITES	GLASBOARD FIBERGLASS REINFORCED PANEL WITH SURFASEAL	GRAY - SMOOTH FINISH	PROVIDE PVC TRIM MOLDING AT WALL BASE, DIVISION SEAMS, INSIDE AND OUTSIDE CORNERS AND EDGES. MITER TRIM AT ALL CORNERS AND CAULK ALL EXPOSED EDGES OF MOLDINGS. COMPLETELY SEAL WITH TITEBOND ULTIMATE MP SELANT IN "CLEAR".
	T-1	CERAMIC TILE	DALTILE	12"X24" FABRIC ART LINEAR #ML63	MEDIUM GRAY	EPOXY GROUT "MAPEI #103 COBBLESTONE".
	T-2	MOSAIC TILE	DALTILE	FLOOR TO 4 1/2" A.F.F. = #RR13 4 1/2" A.F.F. AND HIGHER = #RR08	FROM FLOOR TO 6 ROWS = "ENGINE GRAY" ABOVE 6 ROWS = "ORANGE SODA"	EPOXY GROUT "MAPEI #14 BISCUIT". SEE SHEET A4.4. DO NOT CUT TILES TO ACHIEVE CORRECT BASE HEIGHTS. GRAY BASE TO BE 6 COURSES OF TILE.
	T-3	MOSAIC TILE	DALTILE	CS93	"RANDOM LINEAR MOSAIC - HORIZONTAL ORIENTATION	INSTALL TILE IN HORIZONTAL ORIENTATION. EPOXY GROUT "MAPEI #93 WARM GRAY". SEE SHEET A4.2.
FLOOR FINISH	CON-1	CONCRETE FLOOR SEALANT AT POTTY PLATFORMS	HT PRODUCTS	KENNEL SEAL INDOOR / OUTDOOR SURFACE SEALER	N/A	INSTALL AT POTTY PLATFORMS ONLY. APPLY (2) COATS PER MANUFACTURER'S RECOMMENDATIONS PURCHASE THROUGH HTPRODUCTS.NET
	LVT-1	VINYL TILE	MODERN SURFACE	PINNACLE	STORM GRAY	INSTALL PLANKS PARALLEL WITH THE LONGEST DIMENSION OF THE RECEPTION. MAPEI ULTRABOND G21 ADHESIVE TO BE USED THROUGHOUT. RELATIVE HUMIDITY TEST METHOD PER ASTM F2170 IS REQUIRED. PROVIDE RESULTS TO ARCHITECT PRIOR TO INSTALLATION OF FLOORING.
	RB-1	RUBBER FLOORING	ON DECK SPORTS	RB0017	8 MM BLACK W/ GREY FLECKS	GLUE DOWN WITH MANUFACTURE SPECIFIED ADHESIVE (RBGLUE4) CLEAN/PREP FLOORING PER SEALER RECOMMENDATIONS WITH AUTO SCRUPPER AND SEAL WITH (2) COATS PRAETORIAN FORTIUS TOP COAT/FINISH. USE ACCOUNT # P17-843 FOR PRAETORIAN PRODUCT. RELATIVE HUMIDITY TEST METHOD PER ASTM F2170 IS REQUIRED. PROVIDE RESULTS TO ARCHITECT PRIOR TO INSTALLATION OF FLOORING. ALL FRP TO RUBBER TO BE SEALED WITH 3M-540 IN GRAY. ALL RUBBER FLOORING TO OTHER VERTICAL SURFACES TO BE 3M-540 IN BLACK.
	G-1	SYNTHETIC GRASS SURFACE	ON DECK SPORTS	PTPRO-90	GREEN	
	G-2	SYNTHETIC GRASS SURFACE	FOREVER LAWN	K9GRASS CLASSIC		INSTALL AT ALL POTTY PLATFORMS, SEE SHEET A1.2 FOR POTTY PLATFORM LOCATIONS.
BASE	B-1	COVED VINYL WALL BASE	ROPPE	4" HIGH, 120 FT. COILS, #P123 TYPE TV-8P-129	CHARCOAL	WALL BASE TO BE INSTALLED ON **ALL** WALLS (EXCEPT AT FRP IN DOG AREAS - PLAYROOMS, EVALUATION ROOMS AND SUITES) THROUGHOUT INTERIOR OF SPACE

E.T.R. = EXISTING TO REMAIN

AFTER CONSTRUCTION, G.C. TO MAINTAIN AN ADDITIONAL STOCK= 1 GAL. PAINT IN EACH COLOR (SW7075, SW7661, SW6772) 1 BOX A.C.T. TILES, 1 BOX LVT-1

ALL FRP TO RUBBER TO BE SEALED WITH 3M-540 IN GRAY

ALL RUBBER FLOORING TO OTHER VERTICAL SURFACES TO E 3M-540 IN BLACK

ROOM SCHEDULE

NO.	ROOM NAME	WALL		BASE	FLOOR
100	LOBBY	W-2, T-2 AS NOTED		B-1	LVT-1
101	RESTROOM	FRP-1 BELOW 48"	W-3	B-1	LVT-1
102	OFFICE	W-3		B-1	LVT-1
103	CORRIDOR	FRP-2 BELOW 48"	W-2 ABOVE 48"	B-1	LVT-1
104	SHARED EVALUATION	FRP-1 BELOW 48"	W-3 ABOVE 48"	SEE 3/A1.3	RB-1
104A	SUITE	FRP-1 BELOW 72"	W-3 ABOVE 72"	SEE 3/A1.3	LVT-1
104B	SUITE	FRP-1 BELOW 72"	W-3 ABOVE 72"	SEE 3/A1.3	LVT-1
104C	SUITE	FRP-1 BELOW 72"	W-3 ABOVE 72"	SEE 3/A1.3	LVT-1
105	BREAK ROOM	W-3 / FRP-2		B-1	LVT-1
106	SPA / LAUNDRY	W3, FRP-1 & T-1 AS NOTED	W-3	B-1	LVT-1
107	EVALUATION	FRP-1 BELOW 48"	W-3 ABOVE 48"	SEE 3/A1.3	RB-1
107A	SUITE	FRP-1 BELOW 72"	W-3 ABOVE 72"	SEE 3/A1.3	LVT-1
108	SHARED UTILITY	FRP-1 BELOW 48"	W-3 ABOVE 48"	SEE 3/A1.3	LVT-1
109	STORAGE	W-3		B-1	LVT-1
110	TOY PLAYROOM	FRP-1 BELOW 48"	W-3 ABOVE 48"	SEE 3/A1.3	RB-1
111	ROMPER PLAYROOM	FRP-1 BELOW 48"	W-3 ABOVE 48"	SEE 3/A1.3	RB-1
112	GYM PLAYROOM	FRP-1 BELOW 48"	W-3 ABOVE 48"	SEE 3/A1.3	RB-1
113	SHARED UTILITY	FRP-1 BELOW 48"	W-3 ABOVE 48"	SEE 3/A1.3	LVT-1

NOTES:
1. ALL EXPOSED PREVIOUSLY PAINTED ITEMS TO BE PAINTED.
2. ALL EXPOSED NEW WORK TO BE PAINTED, U.N.O.
3. ALL DOORS AND FRAMES TO BE PRIMED THEN PAINTED W-6.
4. ALL PREVIOUSLY PAINTED CMU (or CONCRETE) SURFACES TO BE PRIMED W-6, PAINTED W-2.
5. ALL BARE CMU (or CONCRETE) SURFACES TO BE PRIMED W-6A, PAINTED W-2.
6. PROVIDE A CLEAN, SMOOTH CONCRETE SURFACE FOR PROPER INSTALLATION OF ALL FLOOR FINISHES.
7. APPLICATIONS OF PAINT SHALL BE ONE COAT PRIMER AND TWO COATS PAINT (U.N.O.)
8. ALL PAINTED WALLS TO RECEIVE PRIMER (W-1).
9. FRP MUST BE INSTALLED AS A SEALED SYSTEM AFTER "BASE" TRIM IS INSTALLED WITH CAULKING APPLIED BETWEEN TRIM AND PANEL JOINTS.
10. **ALL EXPOSED METAL COLUMNS TO BE PAINTED W-7.**
11. **CAULK TOP OF FRP THROUGHOUT WITH 3M 540 GRAY ADHESIVE SEALANT.**

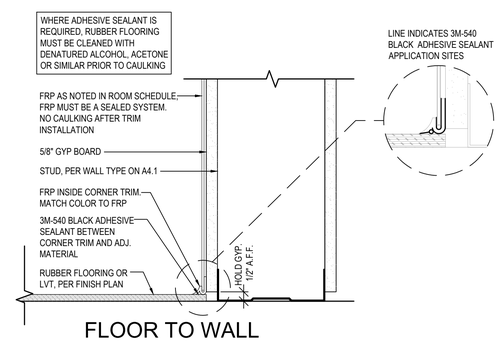

3 A1.3 FLOOR TO WALL DETAIL AT FRP
SCALE: N.T.S.

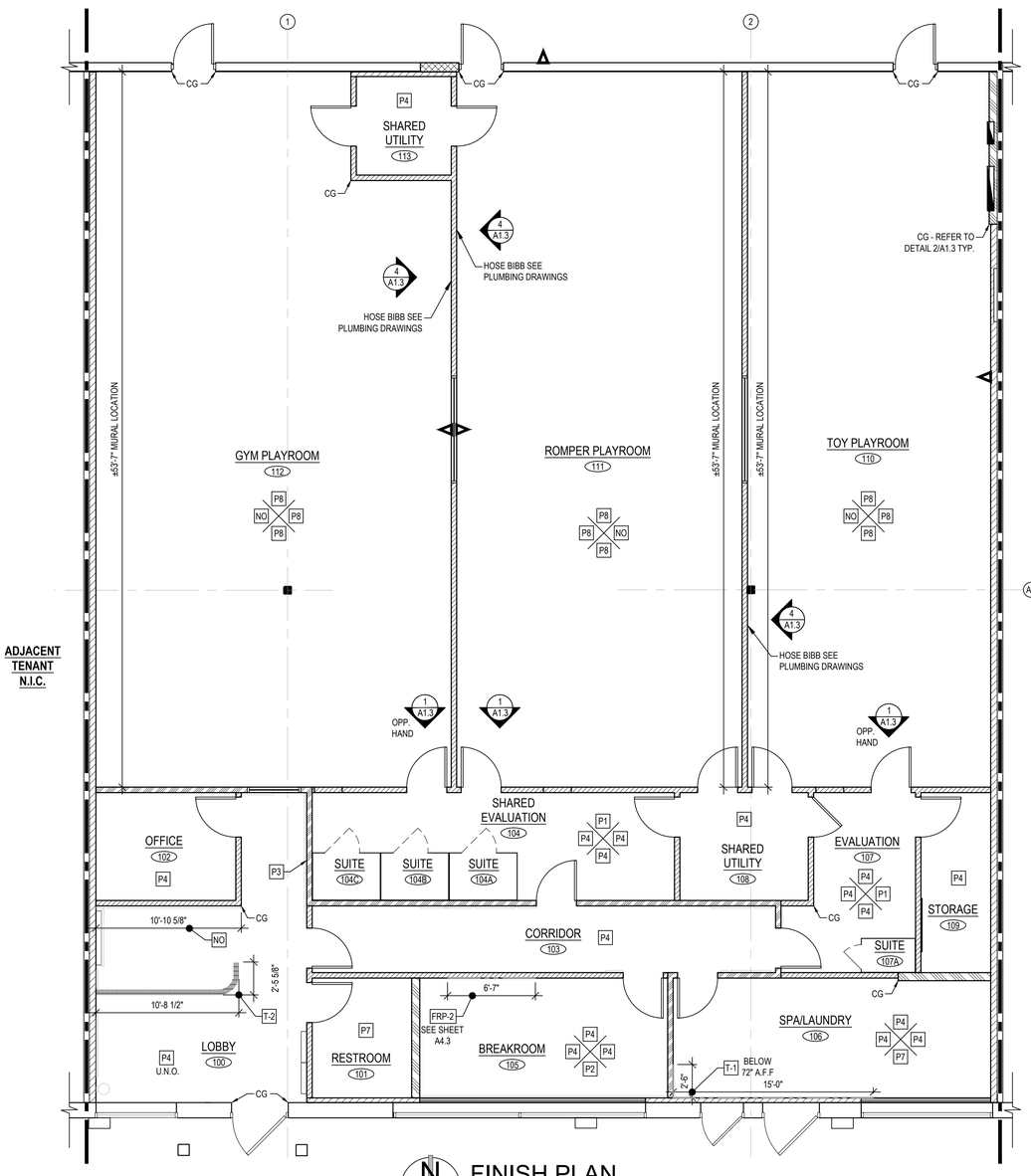

N FINISH PLAN
SCALE 3/16" = 1'-0"

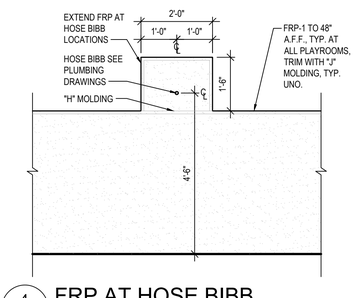

4 A1.3 FRP AT HOSE BIBB
SCALE: 1/2" = 1'-0"

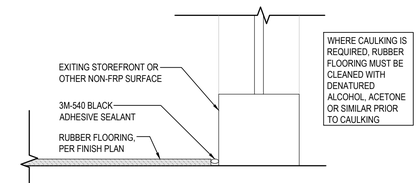

5 A1.3 FLOOR TO WALL DETAIL AT STOREFRONT
SCALE: N.T.S.

KURT L. SCHMITZ LICENSED ARCHITECT No.51649 MINN.

ADA ARCHITECTS, INC.
17710 Detroit Avenue Lakewood, Ohio 44107
Phone (216) 521-5134 Fax (216) 521-4824
www.adaarchitects.cc

dogtopia

DOGTOPIA
MAPLEWOOD, MN 55109
2017 WOODLYNN AVENUE

This document ("Instrument of Service") was prepared by ADA Architects, Inc. ("ADA") specifically for the referenced project and is not intended for any other use. ADA retains all common law, statutory and other reserved rights, including copyrights. This Instrument of Service shall not be used on other projects, for additions to this project, or for completion of this project by others without ADA's prior written consent. Any unauthorized use of this Instrument of Service shall be at the User's sole risk and without liability to ADA. ADA makes no warranties, express or implied, of merchantability or of fitness for a particular purpose.

FRANCHISEE
LANG, BERT LLC

REVISIONS

#	DATE	TYPE
1		
2		
3		
4		
5		

FINISH PLAN

DATE 03/23/20

JOB NO. 19492

A1.3
SHEET NO.

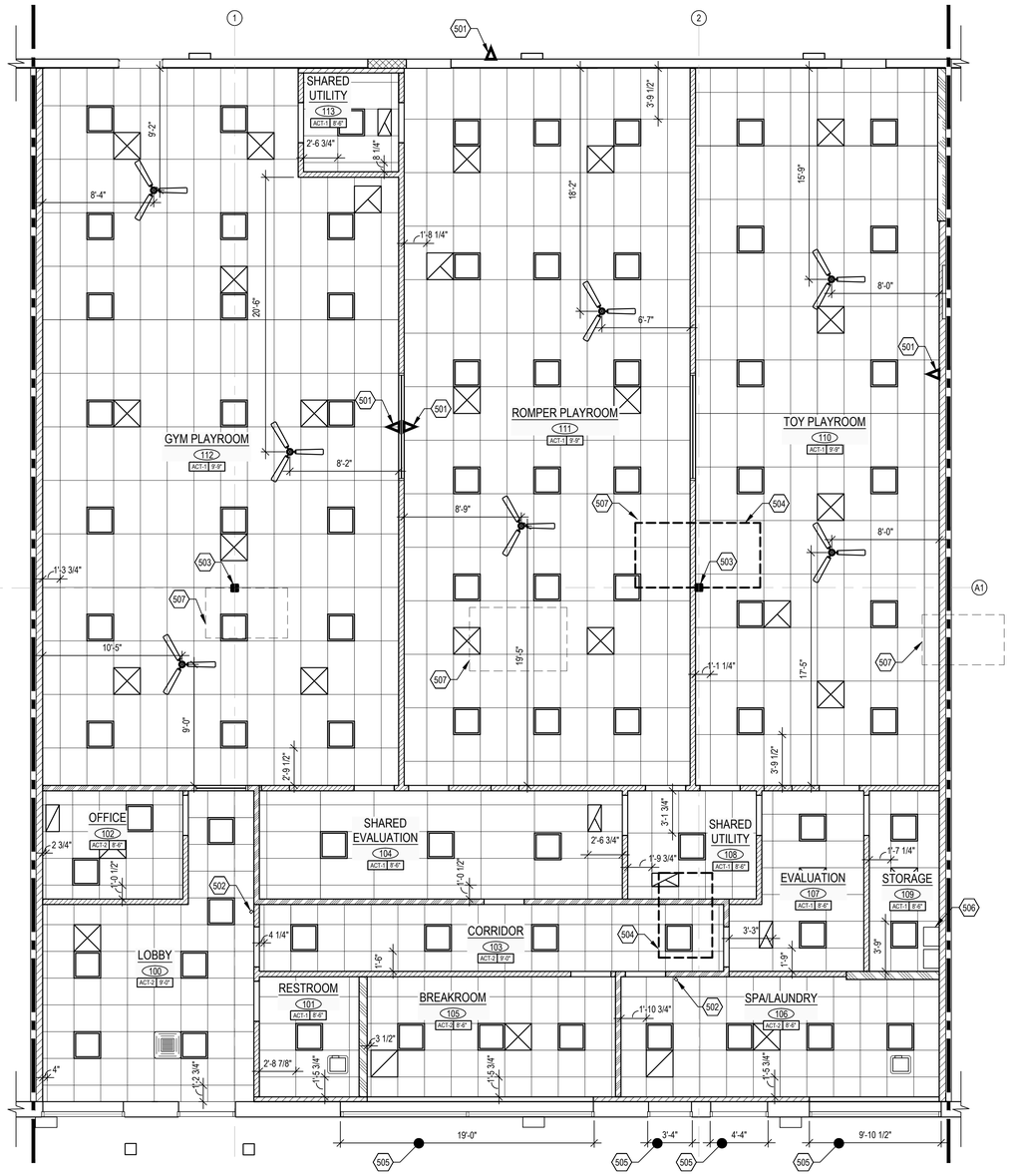

REFLECTED CEILING PLAN

SCALE 3/16" = 1'-0"

CEILING PLAN GENERAL NOTES

1. REFER TO GENERAL NOTES OF SHEET A0.2 FOR ADDITIONAL INFORMATION.
2. GENERAL CONTRACTOR TO VISIT SITE AND VERIFY EXISTING CONDITIONS PRIOR TO SUBMITTING BIDS.
3. GENERAL CONTRACTOR TO NOTIFY ARCHITECT IMMEDIATELY AFTER DEMOLITION OR START OF CONSTRUCTION, IF PROPOSED CEILING HEIGHTS & MECHANICAL REQUIREMENTS CAN NOT BE ACHIEVED FOR ANY REASON.
4. GENERAL CONTRACTOR IS RESPONSIBLE FOR PATCHING & REPAIRING ALL FIREPROOFING AS REQUIRED DUE TO PRIOR TENANT CONSTRUCTION AND DUE TO ANY NEW DEMOLITION OR NEW CONSTRUCTION TO MEET BOTH LANDLORD AND BUILDING DEPARTMENT REQUIREMENTS.
5. GENERAL CONTRACTOR TO PROVIDE CEILING ACCESS PANELS AS REQUIRED TO ACCOMMODATE ELECTRICAL, PLUMBING, SPRINKLER AND/OR MECHANICAL SERVICES THAT PASS THROUGH THE LEASED PREMISES. IE., J-BOXES, DUCT SMOKE DETECTORS, FIRE DAMPERS, FLOW SWITCHES, UTILITY CONNECTION POINTS, ETC.
6. SUSPENSION WIRES SHALL BE INSTALLED WITH A MAXIMUM SPACING OF 48" O.C.
7. ALL LAY-IN CEILING GRIDS SHALL BE CENTERED IN ROOM U.N.O.
8. SEE FP1.0 FOR SPRINKLER INFORMATION.
9. SEE MECHANICAL AND ELECTRICAL DRAWINGS FOR ADDITIONAL INFORMATION.

REFLECTED CEILING PLAN LEGEND

2' X 4' ACOUSTICAL CEILING TILE SEE MATERIAL LEGEND ON THIS SHEET FOR ADDITIONAL INFORMATION		EXHAUST FAN SEE MECHANICAL PLANS FOR ADDITIONAL INFORMATION	
		SUPPLY AIR DIFFUSER SEE MECHANICAL PLANS FOR ADDITIONAL INFORMATION	
2' X 2' ACOUSTICAL CEILING TILE SEE MATERIAL LEGEND ON THIS SHEET FOR ADDITIONAL INFORMATION		RETURN AIR DIFFUSER SEE MECHANICAL PLANS FOR ADDITIONAL INFORMATION	
		2' X 2' RECESSED LIGHT FIXTURE SEE ELECTRICAL DRAWINGS FOR ADDITIONAL INFORMATION	
		EXISTING LIGHT FIXTURE TO REMAIN. SEE ELECTRICAL DRAWINGS FOR ADDITIONAL INFORMATION	
		SURFACE MOUNTED CEILING FAN, SEE ELECTRICAL DRAWINGS FOR ADDITIONAL INFORMATION NO PORTION OF FAN TO EXTEND LOWER THAN 8'-6" A.F.F.	

KEY NOTES

501. NEST CAMERA MOUNTED AT 7'-6" A.F.F., SEE ELECTRICAL DRAWINGS FOR ADDITIONAL INFORMATION.
502. SCENTAIR DIFFUSER MOUNTED AT 8'-6" A.F.F. SEE ELECTRICAL DRAWINGS FOR ADDITIONAL INFORMATION.
503. ADD ACT TRIM AND TEE AROUND COLUMN AND ON CUT LINES.
504. APPROXIMATE LOCATION OF ROOF MOUNTED HVAC UNIT. SEE DETAIL 1/A2.0, STRUCTURAL DRAWINGS AND MECHANICAL DRAWINGS FOR ADDITIONAL INFORMATION.
505. APPLY WINDOW FILM ON INSIDE OF GLAZING. SEE SHEET A3.0 FOR ADDITIONAL INFORMATION.
506. WALL MOUNTED INSTANT WATER HEATER, MOUNT AS CLOSE TO CEILING AS POSSIBLE. SEE PLUMBING DRAWINGS FOR ADDITIONAL INFORMATION.
507. APPROXIMATE LOCATION OF EXISTING ROOF MOUNTED HVAC UNIT TO BE REMOVED AND CAPPED. SEE DETAIL 2/A2.0, STRUCTURAL AND MECHANICAL DRAWINGS FOR ADDITIONAL INFORMATION.

MATERIAL LEGEND

ACT-1	2' X 4' ACOUSTICAL CEILING TILE BYARMSTRONG: FINE FISSURED SCHOOL ZONE HUMIGUARD PLUS IN WHITE MUST USE NATIONAL ACCOUNT NAME DOGTOPIA) & FACILITY ADDRESS PRIOR TO REQUESTING QUOTE OR PLACING ORDER
ACT-2	2' X 2' ACOUSTICAL CEILING TILE BY ARMSTRONG: FINE FISSURED SCHOOL ZONE HUMIGUARD PLUS IN WHITE MUST USE NATIONAL ACCOUNT NAME (DOGTOPIA) & FACILITY ADDRESS PRIOR TO REQUESTING QUOTE OR PLACING ORDER

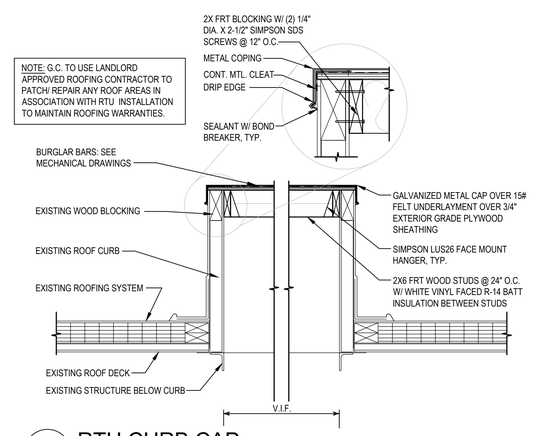

2 / A2.0 RTU CURB CAP

SCALE: 3/4" = 1'-0"

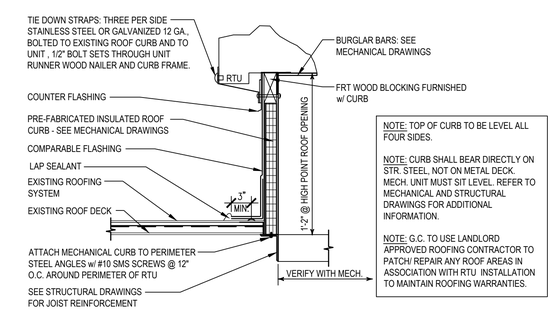

1 / A2.0 MECHANICAL ROOF CURB DETAIL

SCALE: 3/4" = 1'-0"

KURT L. SCHMITZ
LICENSED ARCHITECT
No.51649
MINNESOTA

ARCHITECTS, INC.
17710 Detroit Avenue Lakewood, Ohio 44107
Phone (216) 521-5134 Fax (216) 521-4824
www.adaarchitects.cc

dogtopia

DOGTOPIA

MAPLEWOOD, MN 55109

2017 WOODLYNN AVENUE

This document ("Instrument of Service") was prepared by ADA Architects, Inc. ("ADA") specifically for the referenced project and is not intended for any other use. ADA retains all common law, statutory and other reserved rights, including copyrights. This Instrument of Service shall not be used on other projects, for additions to this project or for completion of this project by others without ADA's prior written consent. Any unauthorized use of this Instrument of Service shall be at the User's sole risk and without liability to ADA. ADA makes no warranties, express or implied, of merchantability or of fitness for a particular purpose.

FRANCHISEE

LANG, BERT LLC

REVISIONS

#	DATE	TYPE
1		
2		
3		
4		
5		

REFLECTED CEILING PLAN

DATE 03/23/20

JOB NO. 19492

A2.0

SHEET NO.

GENERAL NOTES

1. REFER TO GENERAL NOTES ON SHEET **A0.2** FOR ADDITIONAL INFORMATION.
2. SIGNAGE PERMIT DRAWINGS TO BE SUBMITTED SEPARATELY.
3. GENERAL CONTRACTOR TO VISIT SITE AND VERIFY EXISTING CONDITIONS PRIOR TO SUBMITTING PROPOSALS AND COMMENCING WORK.
4. SIGNAGE SHOWN FOR REFERENCE ONLY - ACTUAL SIGNAGE SIZE AND TYPE TO BE DETERMINED BY OWNER AND LANDLORD.
5. ALL SIGNAGE TO COMPLY WITH LANDLORD TENANT CRITERIA AND STATE / LOCAL CODES.
6. COORDINATE WITH SIGNAGE VENDOR FOR ANY SPECIFIC CRITERIA TO BE USED.
7. ALL SIGNAGE TO BE UL RATED.
8. EXISTING STOREFRONT CONSTRUCTION AND FINISHES TO REMAIN U.N.O.
9. WHERE A SURFACE IS NOTED TO BE PAINTED, PAINTING SHALL INCLUDE SURFACE PREPARATION FOR PAINT ACCORDING TO PAINT MANUFACTURER RECOMMENDATIONS.
10. ELEVATIONS ARE DRAWN FOR REFERENCE ONLY.

⬡ KEY NOTES

600. LOCATION OF LEASE LINE.
601. APPROXIMATE LOCATION OF DOGTOPIA EXTERIOR BUILDING SIGN. BUILDING SIGNAGE PROVIDED AND INSTALLED BY SIGN VENDOR. GENERAL CONTRACTOR TO COORDINATE ACTUAL SIGNAGE LOCATION WITH SIGN VENDOR. LOCATION AND SIZE SHOWN ARE APPROXIMATE. ALL SIGNAGE IS BY SEPARATE PERMIT. G.C. TO PROVIDE AND INSTALL SIGNAGE BLOCKING AND POWER AS COORDINATED WITH SIGNAGE VENDOR. G.C. RESPONSIBLE FOR PATCH AND REPAIR OF WALL / ROOF WHERE AFFECTED BY SIGNAGE INSTALL. G.C. TO CONTRACT WITH LANDLORD'S ROOFING CONTRACTOR FOR ALL ROOFING WORK TO MAINTAIN ALL ROOFING WARRANTIES.
602. SHADED AREA INDICATES WHERE G.C. IS TO APPLY NEW WINDOW FILM TO THE INTERIOR SIDE OF WINDOW PANELS. WINDOW FILM TO BE 3M - IJ180CV3 OR SIM, APPROVED BY ARCHITECT. SEE FLOOR PLAN A1.1, REFLECTED CEILING PLAN A2.0 AND WALL TYPES A4.0 FOR ADDITIONAL INFORMATION.
603. PROVIDE 6" HIGH WHITE VINYL NUMBERS STATING STREET ADDRESS IN FONT STYLE TO MATCH BUILDING FONT CENTERED ON ENTRY DOOR. SEE DOOR SCHEDULE NOTES ON SHEETS A5.0 AND A5.1 FOR ADDITIONAL INFORMATION.

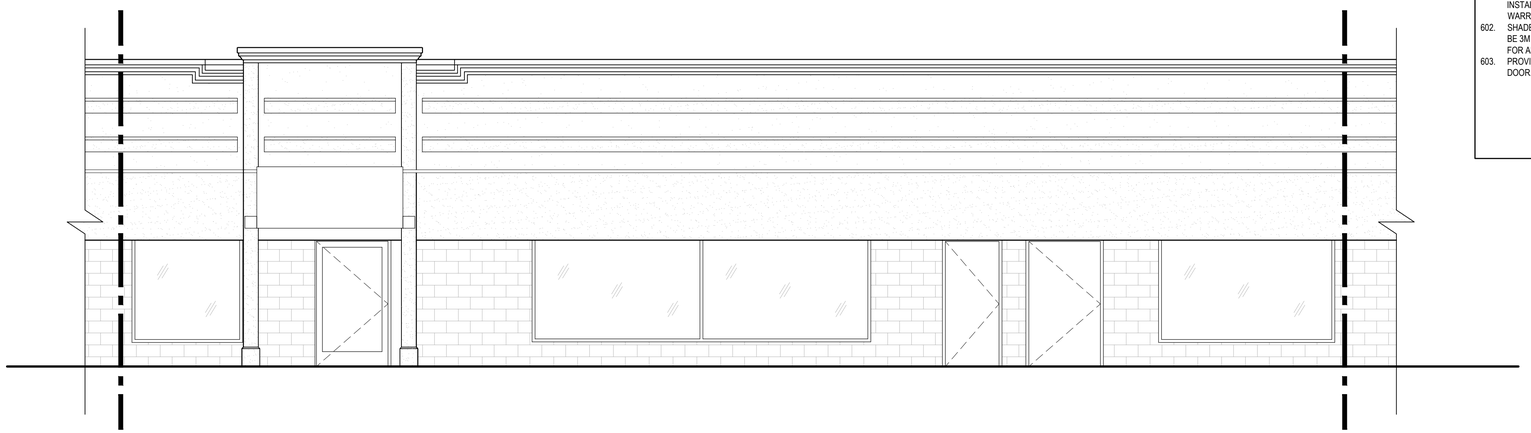

1 / A3.0 EXISTING SOUTH ELEVATION
SCALE: 1/4" = 1'-0"

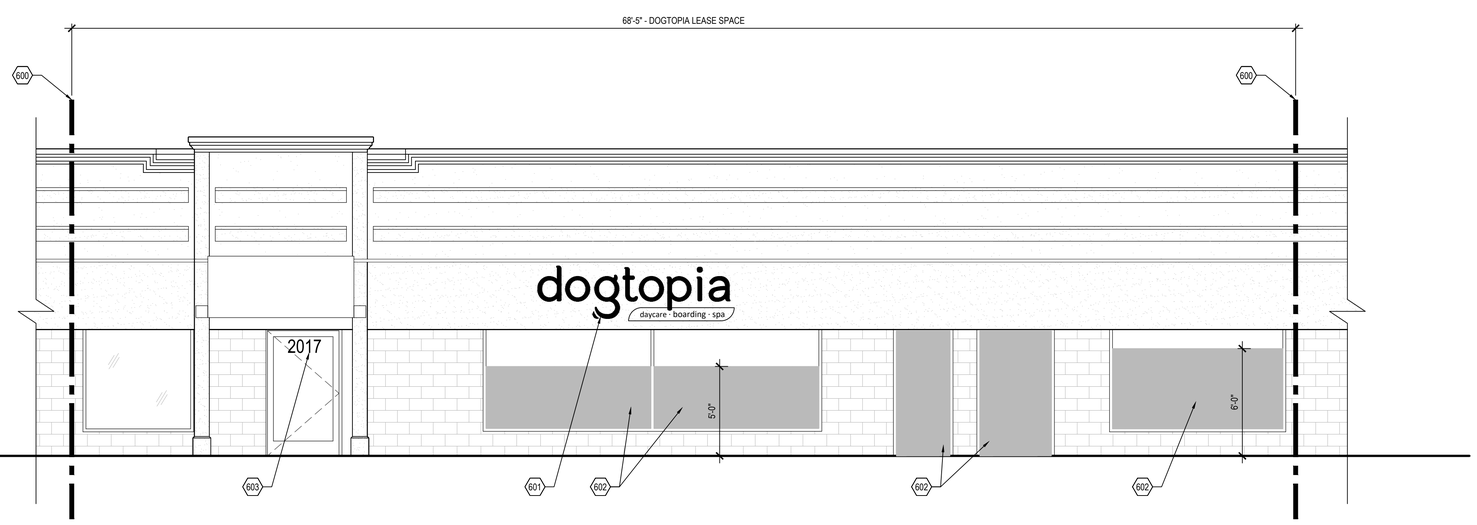

2 / A3.0 PROPOSED SOUTH ELEVATION
SCALE: 1/4" = 1'-0"

KURT L. SCHMITZ
LICENSED ARCHITECT
No.51649
MINN.

ADA ARCHITECTS, INC.
17710 Detroit Avenue Lakewood, Ohio 44107
Phone (216) 521-5134 Fax (216) 521-4824
www.adaarchitects.cc

dogtopia

DOGTOPIA

2017 WOODLYNN AVENUE

MAPLEWOOD, MN 55109

This document ("Instrument of Service") was prepared by ADA Architects, Inc. ("ADA") specifically for the referenced project and is not intended for any other use. ADA retains all common law, statutory and other reserved rights, including copyrights. This Instrument of Service shall not be used on other projects, for additions to this project, or completion of this project by others without ADA's prior written consent. Any unauthorized use of this Instrument of Service shall be at the user's own sole and sole risk and without liability to ADA. ADA makes no warranties, express or implied, of merchantability or of fitness for a particular purpose.

FRANCHISEE
LANG, BERT LLC

REVISIONS

#	DATE	TYPE
1		
2		
3		
4		
5		

EXTERIOR ELEVATIONS

DATE 03/23/20

JOB NO. 19492

A3.0
SHEET NO.

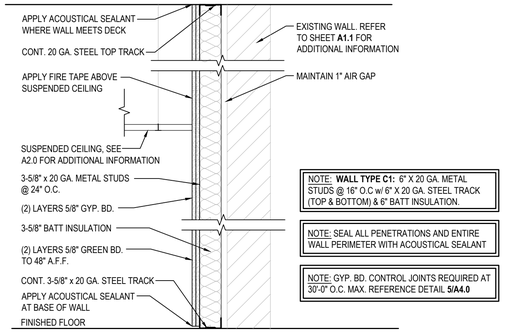

C / A4.0 WALL TYPE C,C1 (ACOUSTICALLY SEALED)
SCALE: 1" = 1'-0"

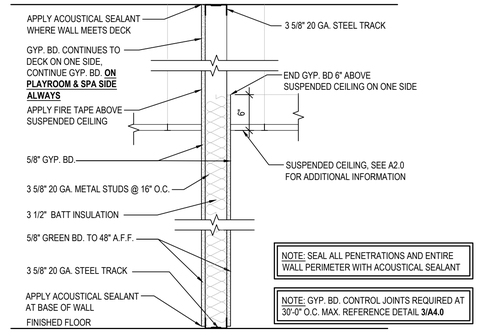

B / A4.0 WALL TYPE B (ACOUSTICALLY SEALED)
SCALE: 1" = 1'-0"

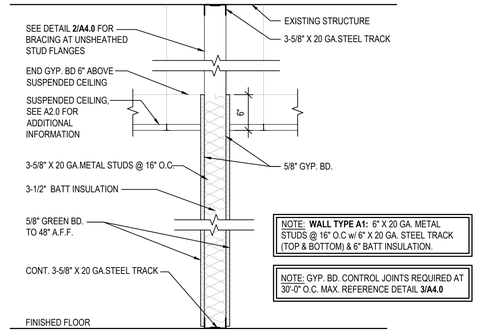

A / A4.0 WALL TYPE A, A1
SCALE: 1" = 1'-0"

WALL TYPE NOTES

1. REFER TO GENERAL NOTES ON SHEET A0.2 FOR ADDITIONAL INFORMATION.
2. GENERAL CONTRACTOR TO VISIT SITE AND VERIFY EXISTING CONDITIONS PRIOR TO SUBMITTING PROPOSALS AND COMMENCING WORK.
3. THE MATERIALS AND DETAILS SHOWN ARE FOR TYPICAL INSTALLATIONS WHERE THE STUD MANUFACTURES RECOMMENDATIONS OR LOCAL ORDINANCES ARE MORE RESTRICTIVE, THEY SHALL APPLY.
4. TYPICAL FASTENERS:
   4A. METAL STUDS TO METAL STUDS OR TRACKS: # -18 X 1/2" SMS /2 WITH PHIL PAN HEAD FOR 25 GA. OR 20 GA. #10 - 16 X 9/16" SMS/3 WITH PHIL PAN HEAD FOR INTERCONNECTION OF 18 GA. OR 16 GA.
   4B. METAL STUDS OR TRACKS TO WOOD PURLINS, GIRDERS & BEAMS: #14-10 X 1 1/2" H.W.H. TYPE "S" METAL -TO- WOOD SMS.
   4C. METAL STUDS OR TRACKS TO STRUCTURAL STEEL (TUBE STEEL, WIDE FLANGE COLUMNS, BEAMS, GIRDERS, ETC.): SMS/3 OR SMS/4 - GAUGE AND LENGTH AS REQUIRED FOR THE COMBINED THICKNESS OF THE FRAMING TO BE DRILLED.
   4D. PLYWOOD TO METAL STUDS: #10 - 24 X 3/4" SMS/3 (PLYMETAL SMS) WITH THIN WAFER HEAD.
   4E. GYP. BOARD TO METAL STUDS: #7 X 1 1/4" HI-LO TYPE "S" BUGLE HEAD SCREWS FOR 3/8" TO 5/8" GYP. BOARD TO 25 GAUGE OR 20 GAUGE STUDS. #6 X 1 1/4" TYPE S-12 BUGLE HEAD SCREWS FOR 3/8" TO 5/8" TO 18 GA. OR 16 GA. METAL STUDS OR TRACKS.
   4F. CONCRETE TO METAL STUDS: 0.157" DIA. SHOT PIN WITH MIN. 3/4" EMBEDMENT @ 16" O.C. SPACING. SEE STRUCTURAL.
5. ALL GYPSUM BOARD RETURNS SHALL HAVE METAL CORNER BEADS MINIMUM FLOOR TO CEILING. ALL PENETRATIONS IN DRYWALL CONSTRUCTION ABOVE FINISHED CEILING AND AS NOTED ELSEWHERE SHALL BE EFFECTIVELY SEALED TO PREVENT SOUND LEAKAGE AND FIRE CAULKED AT U.L. RATED PARTITIONS. ALL DRY-WALL JOINTS ABOVE FINISHED CEILING SHALL BE "FIRE TAPED." ALL MECHANICAL CHASES AND OTHER NOTED CHASES ARE TO EXTEND UP TO THE UNDERSIDE OF THE DECK STRUCTURE ABOVE. ALL PLUMBING CHASES UNLESS OTHERWISE NOTED SHALL EXTEND ABOVE THE HIGHEST ADJOINING CEILING AND BE BRACED TO STRUCTURE. ALL VERTICAL DIMENSIONS SHOWN ARE TO THE TOP OF THE SLAB, UNLESS NOTED OTHERWISE.
6. DRYWALL CONTROL JOINTS ARE TO BE INSTALLED AT MINIMUM 30'-0" O.C. AT PARTITIONS AND ELSEWHERE AS NOTED.
7. AT PARTITIONS HIGHER THAN 12'-0" PROVIDE HORIZONTAL LATERAL BRACING WITH 1 1/2" 16GA. COLD ROLLED CHANNELS AT 8'-0" O.C. VERT. . ANCHORED TO STUDS. SEE DETAIL 2 THIS SHEET FOR ADDITIONAL INFORMATION.
8. ALL FRAMING SHALL BE METAL STUDS.
9. ALL WOOD IS TO BE FIRE RETARDANT TREATED.
10. ALL RATED WALLS TO FOLLOW UL DESIGN # U419.
11. HOLD GYP. BD. 1/2" A.F.F. TYP.
12. ALL GYP. BD. TO BE FINISHED TO A LEVEL 4 MINIMUM.

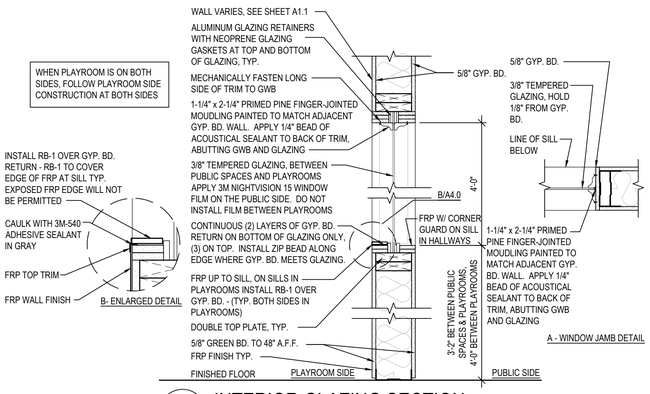

1 / A4.0 INTERIOR GLAZING SECTION
SCALE: 1" = 1'-0"

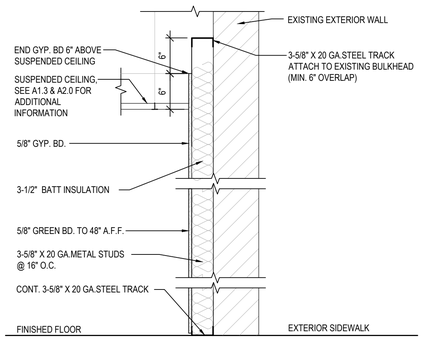

F / A4.0 WALL TYPE F
SCALE: 1" = 1'-0"

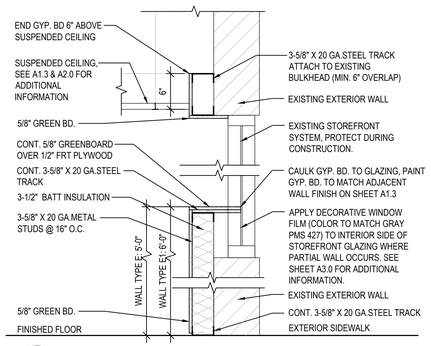

E / A4.0 WALL TYPE E, E1
SCALE: 1" = 1'-0"

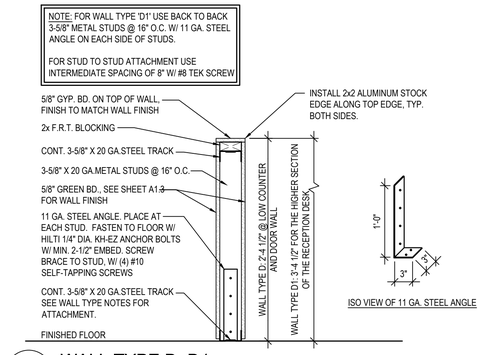

D / A4.0 WALL TYPE D, D1
SCALE: 1" = 1'-0"

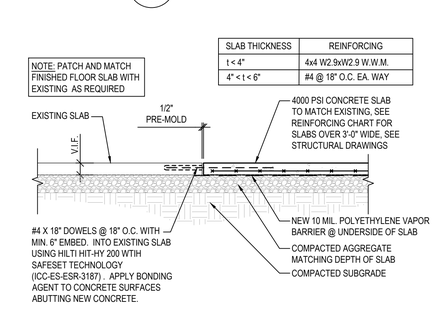

SLAB THICKNESS	REINFORCING
t < 4"	4x4 W2.9xW2.9 W.W.M.
4" < t < 6"	#4 @ 18" O.C. EA. WAY

7 / A4.0 TYPICAL SLAB PATCH DETAIL
SCALE: NONE

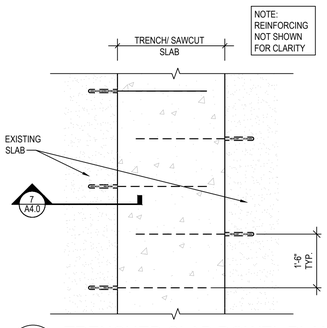

6 / A4.0 TRENCHED SLAB DOWEL PLAN
SCALE: NONE

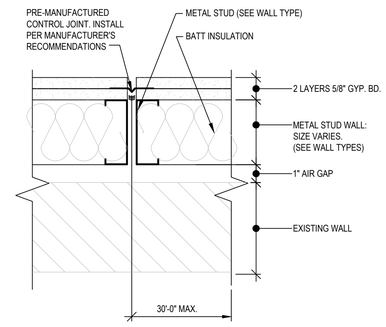

5 / A4.0 GYP. BD. CONTROL JOINT DETAIL
SCALE: 3"=1'-0"

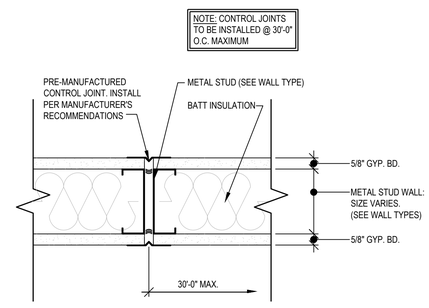

3 / A4.0 GYP. BD. CONTROL JOINT DETAIL
SCALE: 3"=1'-0"

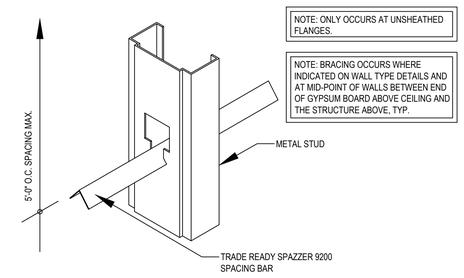

2 / A4.0 LATERAL BRACING @ FREE - UNSHEATHED FLANGES
SCALE: N.T.S.

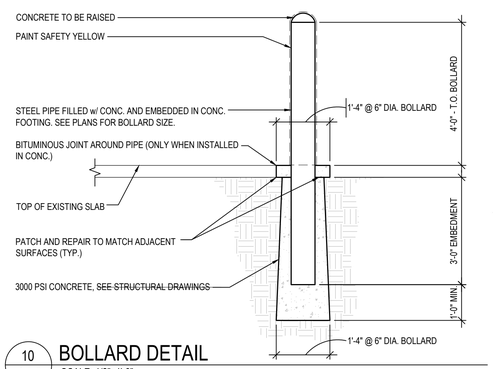

10 / A4.0 BOLLARD DETAIL
SCALE: 1/2"=1'-0"

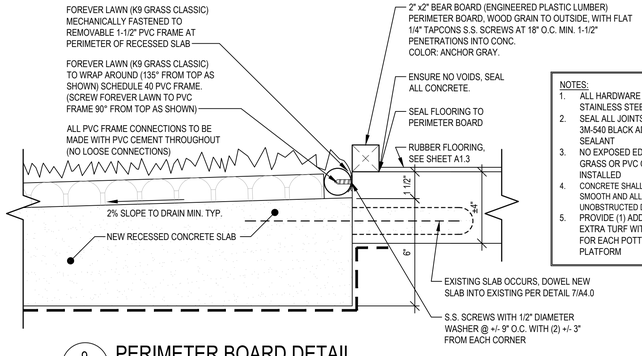

NOTES:
1. ALL HARDWARE TO BE STAINLESS STEEL
2. SEAL ALL JOINTS WITH 3M-540 BLACK ADHESIVE SEALANT
3. NO EXPOSED EDGES OF GRASS OR PVC ONCE INSTALLED
4. CONCRETE SHALL BE SMOOTH AND ALLOW FOR UNOBSTRUCTED DRAINAGE
5. PROVIDE (1) ADDITIONAL EXTRA TURF WITH FRAME FOR EACH POTTY PLATFORM

9 / A4.0 PERIMETER BOARD DETAIL
SCALE: 3"=1'-0"

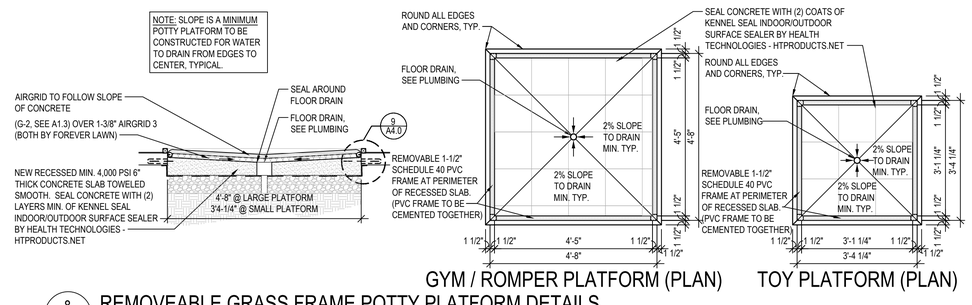

GYM / ROMPER PLATFORM (PLAN)
TOY PLATFORM (PLAN)

8 / A4.0 REMOVEABLE GRASS FRAME POTTY PLATFORM DETAILS
SCALE: N.T.S.

KURT L. SCHMITZ
LICENSED ARCHITECT
No.51649
MINNESOTA

ADA ARCHITECTS, INC.
17710 Detroit Avenue Lakewood, Ohio 44107
Phone (216) 521-5134 Fax (216) 521-4824
www.adaarchitects.cc

dogtopia

DOGTOPIA
MAPLEWOOD, MN 55109
2017 WOODLYNN AVENUE

This document ("Instrument of Service") was prepared by ADA Architects, Inc. ("ADA") specifically for the referenced project and is not intended for any other use. ADA retains all common law, statutory and other reserved rights, including copyrights. This Instrument of Service shall not be used on other projects, for additions to this project or for completion of this project by others without ADA's prior written consent. Any unauthorized use of this Instrument of Service shall be at the User's sole risk and without liability to ADA. ADA makes no warranties, express or implied, of merchantability or of fitness for a particular purpose.

FRANCHISEE
LANG, BERT LLC

REVISIONS

#	DATE	TYPE
1		
2		
3		
4		
5		

WALL TYPES

DATE 03/23/20
JOB NO. 19492

A4.0
SHEET NO.

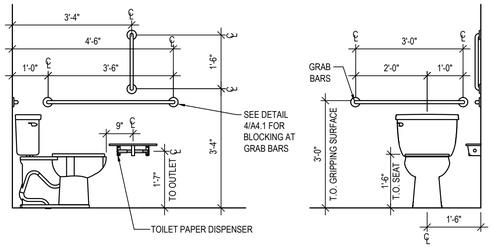

3 / A4.1 ACCESSIBLE WATER CLOSET ELEVATIONS
SCALE: 1/2" = 1'-0"

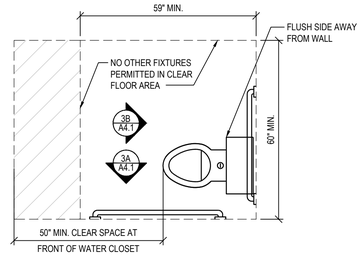

2 / A4.1 ACCESSIBLE TOILET
SCALE: 1/2" = 1'-0"

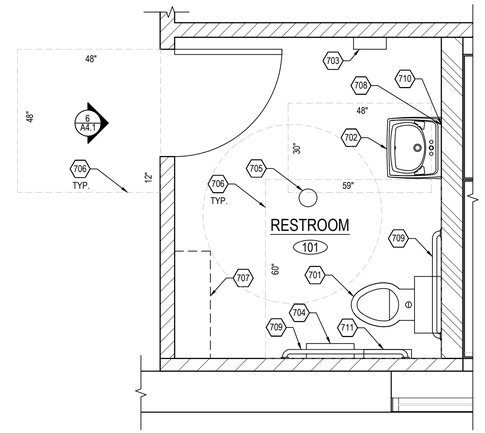

1 / A4.1 ENLARGED RESTROOM PLAN
SCALE: 1/2" = 1'-0"

GENERAL NOTES

1. SEE TYPICAL RESTROOM DETAILS THIS SHEET FOR ADDITIONAL INFORMATION.
2. SEE A1.1, & 4.1 FOR KEY NOTE REFERENCES, WALL TYPE REFERENCES, AND ADDITIONAL INFORMATION.
3. SEE PLUMBING SHEET FOR FIXTURE TYPES.
4. SEE ELECTRICAL & PLUMBING DRAWINGS FOR ADDITIONAL INFORMATION

KEY NOTES

701. WATER CLOSET (SEE PLUMBING DRAWINGS), SEE DETAILS 2&3/A4.1 FOR ACCESSIBLE CLEARANCES.
702. LAVATORY (SEE PLUMBING DRAWINGS), SEE DETAIL 5/A4.1 FOR ACCESSIBLE CLEARANCES.
703. PAPER TOWEL DISPENSER, SEE 7/A4.1. ULINE H-7556
704. TOILET PAPER DISPENSER, SEE DETAIL 3/A4.1 FOR MOUNTING LOCATION. BOBRICK MODEL B-265
705. FLOOR DRAIN. REFER TO PLUMBING DRAWINGS FOR MORE DETAILS.
706. DASHED LINE INDICATES MIN. CLEAR FLOOR SPACE (TYP.)
707. WALL CABINET. SEE DETAIL B/A4.2.
708. MIRROR (24" W x 34" H WITH J-MOLD), SEE DETAIL 7/A4.1 FOR MOUNTING HEIGHT. BY BOBRICK.
709. GRAB BARS, SEE DETAIL 3/A4.1 FOR ACCESSIBLE CLEARANCES, AND DETAIL 4/A4.1 FOR BLOCKING REQUIREMENTS.
710. SOAP DISPENSER, BOBRICK MODEL B-40. SEE 7/A4.1.
711. SANITARY NAPKIN DISPOSAL BOBRICK MODEL: #B-270.

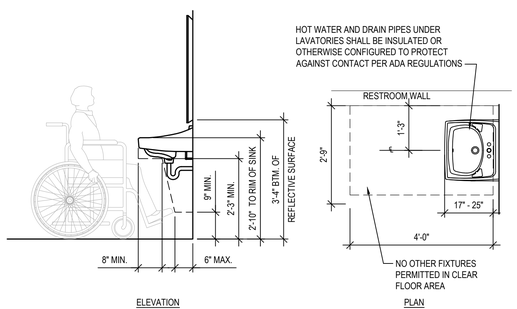

5 / A4.1 ACCESSIBLE LAVATORY PLAN & ELEVATION
SCALE: 1/2" = 1'-0"

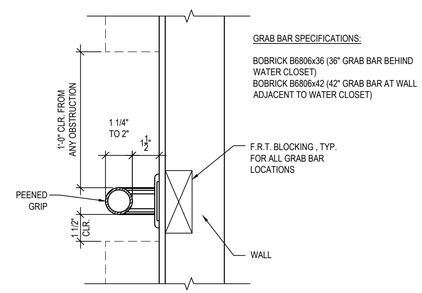

4 / A4.1 GRAB BAR SECTION
SCALE: N.T.S.

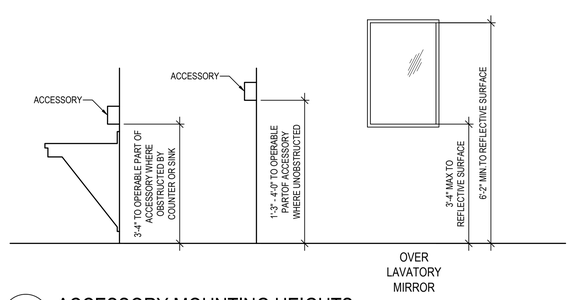

7 / A4.1 ACCESSORY MOUNTING HEIGHTS
SCALE: 1/2" = 1'-0"

TYPICAL ROOM / EXIT SIGNS

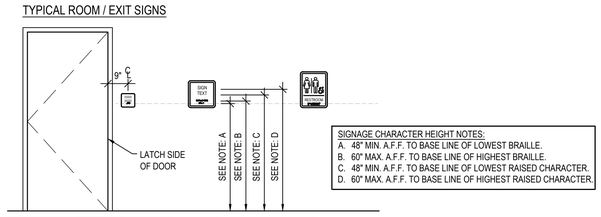

SIGNAGE CHARACTER HEIGHT NOTES:
A. 48" MIN. A.F.F. TO BASE LINE OF LOWEST BRAILLE.
B. 60" MAX. A.F.F. TO BASE LINE OF HIGHEST BRAILLE.
C. 48" MIN. A.F.F. TO BASE LINE OF LOWEST RAISED CHARACTER.
D. 60" MAX. A.F.F. TO BASE LINE OF HIGHEST RAISED CHARACTER.

NOTES:
1. CHARACTERS, SYMBOLS AND THEIR BACKGROUND SHALL HAVE A NON-GLARE FINISH. CHARACTERS AND SYMBOLS SHALL CONTRAST WITH THEIR BACKGROUND.
2. CHARACTERS ON SIGNS SHALL BE RAISED 1/32" MINIMUM & SHALL BE SANS SERIF UPPERCASE CHARACTERS. CHARACTERS SHALL BE A MINIMUM OF 5/8" AND A MAXIMUM OF 2" HIGH.
3. BRAILLE SHALL BE GRADE 2 AND SHALL COMPLY SIZE AND SPACING REQUIREMENTS IN THE ACCESSIBILITY CODE. BRAILLE CHARACTERS SHALL BE LOCATED BELOW THE SIGN TEXT, WITH A 3/8" MINIMUM SPACE BETWEEN BRAILLE AND TEXT OR OTHER SIGNAGE ELEMENTS (BORDER, PICTOGRAM, ETC).
4. PICTOGRAMS SHALL BE ACCOMPANIED BY THE VERBAL DESCRIPTION PLACED DIRECTLY BELOW THE PICTOGRAM. THE OUTSIDE DIMENSION OF THE PICTOGRAM FIELD SHALL BE A MINIMUM OF 6" IN HEIGHT.

6 / A4.1 SIGN DETAILS
SCALE: N.T.S.

KURT L. SCHMITZ
LICENSED ARCHITECT
No.51649
MINNESOTA

ADA ARCHITECTS, INC.
17710 Detroit Avenue Lakewood, Ohio 44107
Phone (216) 521-5134 Fax (216) 521-4824
www.adaarchitects.cc

dogtopia

DOGTOPIA

2017 WOODLYNN AVENUE MAPLEWOOD, MN 55109

This document ("Instrument of Service") was prepared by ADA Architects, Inc. ("ADA") specifically for the referenced project and is not intended for any other use. ADA retains all common law, statutory and other reserved rights, including copyrights. This Instrument of Service shall not be used on other projects, for additions to this project or for completion of this project by others without ADA's prior written consent. Any unauthorized use of this Instrument of Service shall be at the user's own risk and without liability to ADA. ADA makes no warranties, express or implied, of merchantability or of fitness for a particular purpose.

FRANCHISEE
LANG, BERT LLC

REVISIONS

#	DATE	TYPE
1		
2		
3		
4		
5		

RESTROOM DETAILS

DATE 03/23/20

JOB NO. 19492

A4.1
SHEET NO.

TILE NOTE
ALL TILE TO RECEIVE EPOXY GROUT.

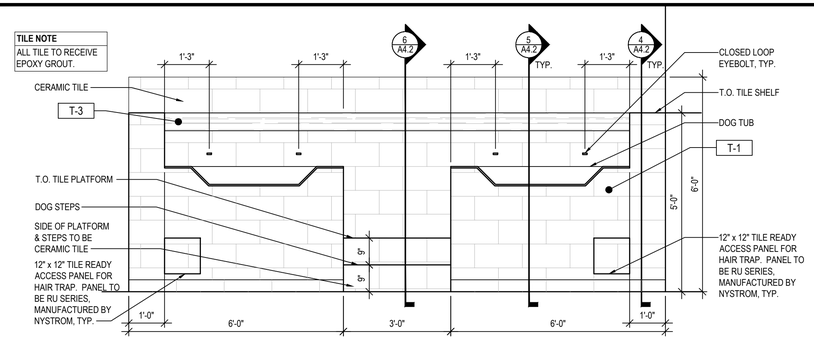

2 A4.2 TUB ELEVATION
SCALE: 1/2" = 1'-0"

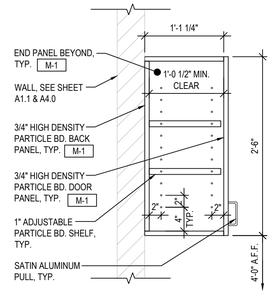

B A4.2 UPPER WALL CABINET
SCALE: 1" = 1'-0"

CASEWORK NOTES

1. REFER TO GENERAL NOTES OF SHEET A2.0 FOR ADDITIONAL INFORMATION
2. GENERAL CONTRACTOR TO VISIT SITE AND VERIFY EXISTING CONDITIONS PRIOR TO SUBMITTING PROPOSALS AND COMMENCING WORK.
3. CABINETS WITH DOORS:
   ALL PARTS EXPOSED TO VIEW SHALL BE COVERED WITH LAMINATED PLASTIC FINISH. INSIDE OF CABINETS SHALL BE MELAMINE.
4. FURNISH ALL HARDWARE AS REQUIRED. PROVIDE ADJUSTABLE SHELVES AND REQUIRED HARDWARE WHERE SHOWN. (NO VISIBLE HARDWARE)
5. PROVIDE ALL NECESSARY "IN-WALL" BLOCKING OR PLYWOOD BACKING AS REQUIRED TO SUPPORT COUNTERS, SHELVING, CABINETRY, ETC.
6. PROVIDE SUPPORT BRACKETS AS REQUIRED AT ALL COUNTERS.
7. PROVIDE 'CUTOUT' AND/OR OPENINGS AS MAY BE REQUIRED FOR PLUMBING FIXTURES, EQUIPMENT, ETC. VERIFY LOCATIONS WITH .
8. PROVIDE OPENING IN COUNTERS W/ PLASTIC GROMMETS FOR WIRING AT ELECTRIC & DATA OUTLETS AS MAY BE REQUIRED. VERIFY LOCATIONS WITH .
9. SEE DRAWING A1.2 FOR CASEWORK & COUNTERTOP LOCATIONS.
10. PROVIDE RUBBER BASE OVER TOE KICK.
11. OPEN SHELVING: ALL SHELVING UNITS, EDGES OF SHELVES AND VERTICAL SUPPORTS SHALL HAVE PLASTIC LAMINATE FINISH ON ALL SURFACES EXPOSED TO VIEW.

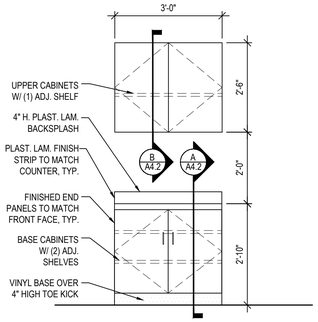

3 A4.2 SPA / LAUNDRY CASEWORK ELEVATION
SCALE: 1/2" = 1'-0"

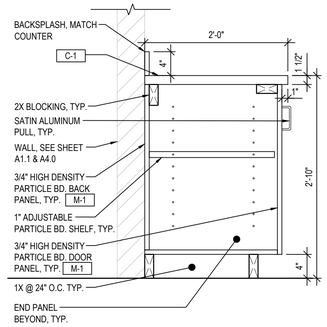

A A4.2 BASE WALL CABINET
SCALE: 1" = 1'-0"

MATERIAL LEGEND

C-1	WILSONART D315-60 PLASTIC LAMINATE COUNTER IN "PLATINUM" OVER (2) LAYERS 3/4" HIGH-DENSITY PARTICLE BOARD
M-1	MILLWORK FINISH TO BE 1-1/2" ARBORITE #W-458SR DURIVAGE IN "BEACH COMBED"
T-1	CERAMIC TILE. DALTILE 12" X 24" FABRIC ART LINEAR #ML63 IN "MEDIUM GRAY" INSTALLED IN HORIZONTAL ORIENTATION. GROUT WITH MAPEI EPOXY GROUT #103 "COBBLESTONE"
T-3	MOSAIC TILE. DALTILE CS93 "RANDOM LINEAR MOSAIC" INSTALLED IN HORIZONTAL ORIENTATION. GROUT WITH MAPEI EPOXY GROUT #93 "WARM GRAY"

KEY NOTES

801. WIRE SHELF.
802. CABINETRY, SEE DETAIL 3/A4.2.
803. DROP DOWN TUB IN WHITE BY DOGTUBS.COM.
804. HYDRAULIC GROOMING TABLE.
805. DRYING CRATES/GROOMING KENNEL.
806. MOP SINK WITH 4-PRODUCT MIXING STATION, SEE PLUMBING DRAWINGS.
807. WASHING MACHINE.
808. DRYER.
809. BATH TUB FAUCET, SEE PLUMBING DRAWINGS FOR ADDITIONAL INFORMATION.
810. HAIR TRAP AS MANUFACTURED BY DANCO: 9D0010306 WITH MICROBAN HAIR CATCHER.
811. 12" X 12" TILE READY ACCESS PANEL FOR HAIR TRAP. PANEL TO BE RU SERIES, MANUFACTURED BY NYSTROM.
812. STAINLESS STEEL 1.5" CLOSED LOOP EYEBOLT. INSTALL 4" ABOVE TOP OF TUB.
813. DASHED LINE INDICATES MIN. CLEAR FLOOR SPACE (TYP.)
814. FLOOR DRAIN. REFER TO PLUMBING DRAWINGS FOR ADDITIONAL INFORMATION.

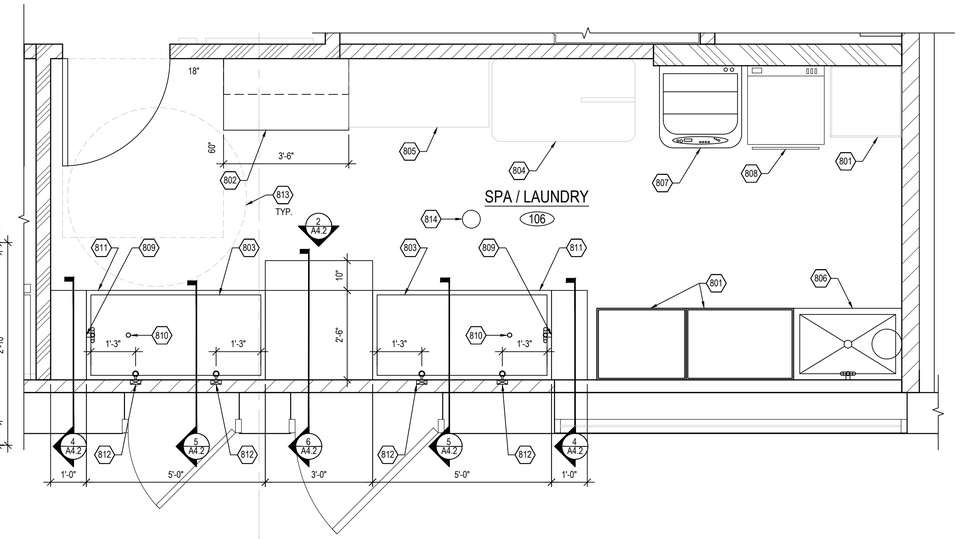

1 A4.2 SPA / LAUNDRY / UTILITY ENLARGED PLAN
SCALE: 1/2" = 1'-0"

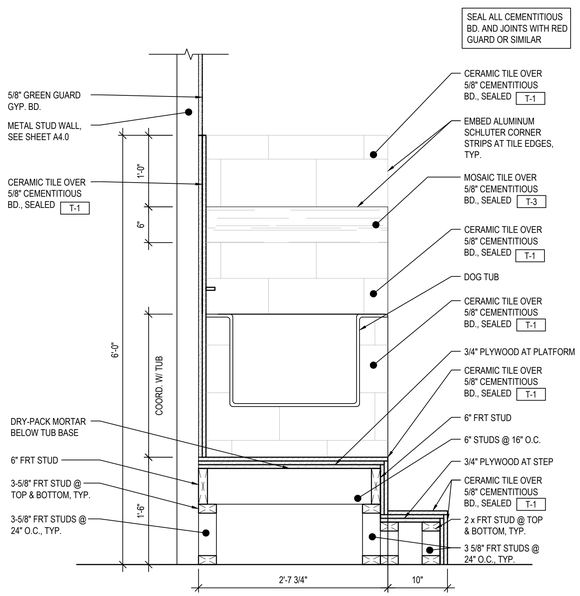

6 A4.2 DOG TUB SECTION
SCALE: 1" = 1'-0"

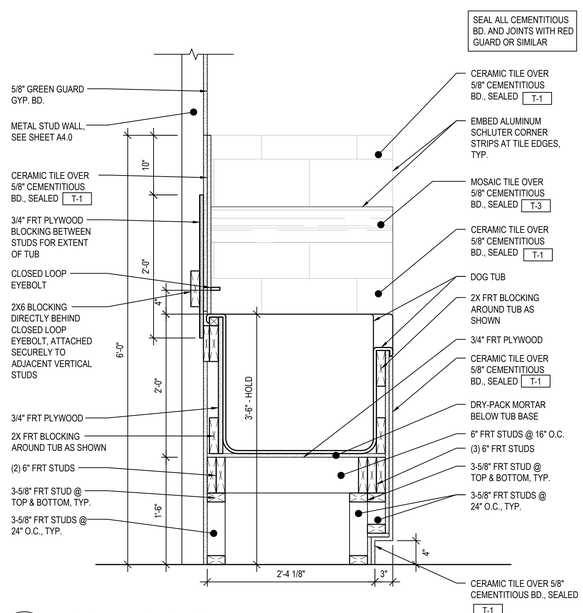

5 A4.2 DOG TUB SECTION
SCALE: 1" = 1'-0"

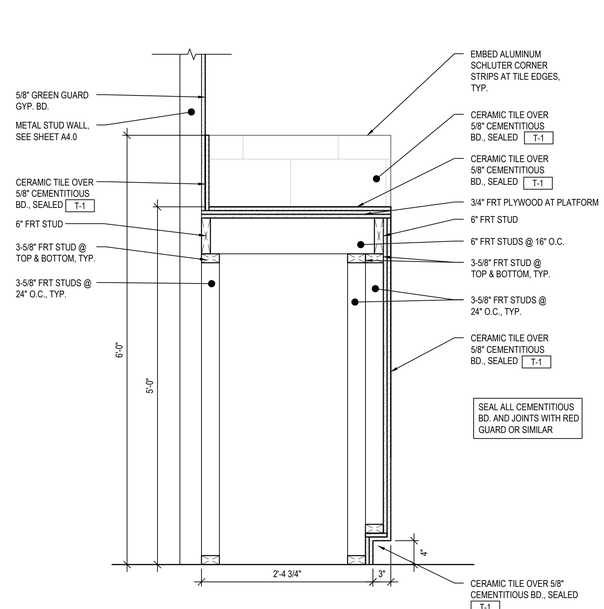

4 A4.2 DOG TUB SECTION
SCALE: 1" = 1'-0"

KURT L. SCHMITZ
LICENSED ARCHITECT
No. 51649
MINNESOTA

ADA ARCHITECTS, INC.
17710 Detroit Avenue Lakewood, Ohio 44107
Phone (216) 521-5134 Fax (216) 521-4824
www.adaarchitects.cc

dogtopia

DOGTOPIA

2017 WOODLYNN AVENUE

MAPLEWOOD, MN 55109

This document ("Instrument of Service") was prepared by ADA Architects, Inc. ("ADA") specifically for the referenced project and is not intended for any other use. ADA retains all common law, statutory and other reserved rights, including copyrights. This Instrument of Service shall not be used on other projects, for additions to this project or for completion of this project by others without ADA's prior written consent. Any unauthorized use of this Instrument of Service shall be at the User's sole and without liability to ADA. ADA makes no warranties, express or implied, of merchantability or of fitness for a particular purpose.

FRANCHISEE
LANG, BERT LLC

REVISIONS

#	DATE	TYPE
1		
2		
3		
4		
5		

SPA / LAUNDRY DETAILS

DATE 03/23/20

JOB NO. 19492

A4.2

SHEET NO.

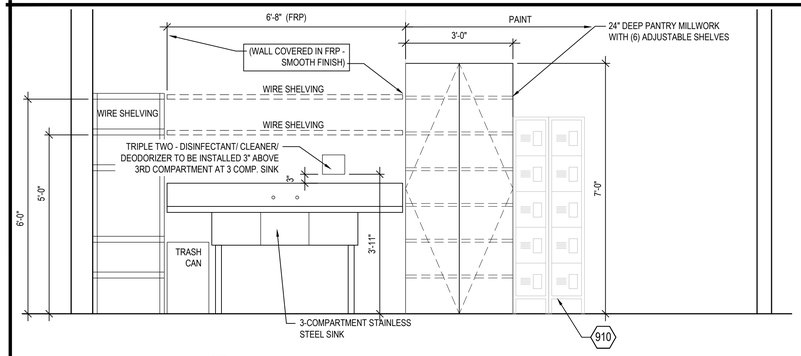

3 / A4.3 BREAK ROOM CASEWORK ELEVATION
SCALE: 1/2" = 1'-0"

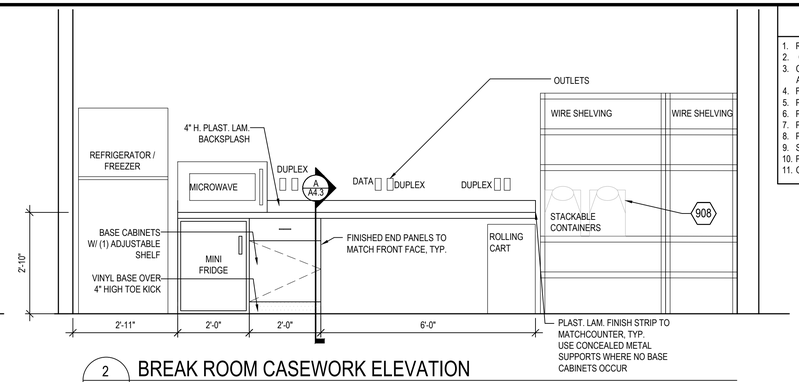

2 / A4.3 BREAK ROOM CASEWORK ELEVATION
SCALE: 1/2" = 1'-0"

CASEWORK NOTES

1. REFER TO GENERAL NOTES OF SHEET A2.0 FOR ADDITIONAL INFORMATION
2. GENERAL CONTRACTOR TO VISIT SITE AND VERIFY EXISTING CONDITIONS PRIOR TO SUBMITTING PROPOSALS AND COMMENCING WORK.
3. CABINETS WITH DOORS:
   ALL PARTS EXPOSED TO VIEW SHALL BE COVERED WITH LAMINATED PLASTIC FINISH. INSIDE OF CABINETS SHALL BE MELAMINE.
4. FURNISH ALL HARDWARE AS REQUIRED. PROVIDE ADJUSTABLE SHELVES AND REQUIRED HARDWARE WHERE SHOWN. (NO VISIBLE HARDWARE)
5. PROVIDE ALL NECESSARY "IN-WALL" BLOCKING OR PLYWOOD BACKING AS REQUIRED TO SUPPORT COUNTERS, SHELVING, CABINETRY, ETC.
6. PROVIDE SUPPORT BRACKETS AS REQUIRED AT ALL COUNTERS.
7. PROVIDE 'CUTOUT' AND/OR OPENINGS AS MAY BE REQUIRED FOR PLUMBING FIXTURES, EQUIPMENT, ETC. VERIFY LOCATIONS WITH .
8. PROVIDE OPENING IN COUNTERS W/ PLASTIC GROMMETS FOR WIRING AT ELECTRIC & DATA OUTLETS AS MAY BE REQUIRED, VERIFY LOCATIONS WITH .
9. SEE DRAWING A1.2 FOR CASEWORK & COUNTERTOP LOCATIONS.
10. PROVIDE RUBBER BASE OVER TOE KICK.
11. OPEN SHELVING: ALL SHELVING UNITS, EDGES OF SHELVES AND VERTICAL SUPPORTS SHALL HAVE PLASTIC LAMINATE FINISH ON ALL SURFACES EXPOSED TO VIEW.

MATERIAL LEGEND

C-3	WILSONART PLASTIC LAMINATE COUNTER IN **4987K-07 "LECHE VESTA"** OVER (2) LAYERS 3/4" HIGH-DENSITY PARTICLE BOARD
M-2	MILLWORK FINISH TO BE WILSONART #D354K-28 "DESIGNER WHITE"

KEY NOTES

901. STACKING STOOLS (TOTAL OF 4).
902. REFRIGERATOR
903. 3-COMPARTMENT STAINLESS STEEL SINK, SEE PLUMBING DRAWINGS.
904. MICROWAVE
905. DASHED LINE AND ANNOTATIONS INDICATE MIN CLEAR FLOOR SPACE, TYP.
906. 3'-0" WIDE, 2'-0" DEEP PANTRY WITH ADJUSTABLE SHELVES.
907. REGENCY 16" x 72" STAINLESS STEEL TUBULAR WALL MOUNTED SHELF.
908. 40LB VITTLE VAULTS STACKABLE PET FOOD CONTAINERS.
909. WIRE SHELF.
910. (2) LOCKERS.
911. MINI FRIDGE.
912. FLOOR DRAIN. REFER TO PLUMBING DRAWINGS FOR ADDITIONAL INFORMATION.

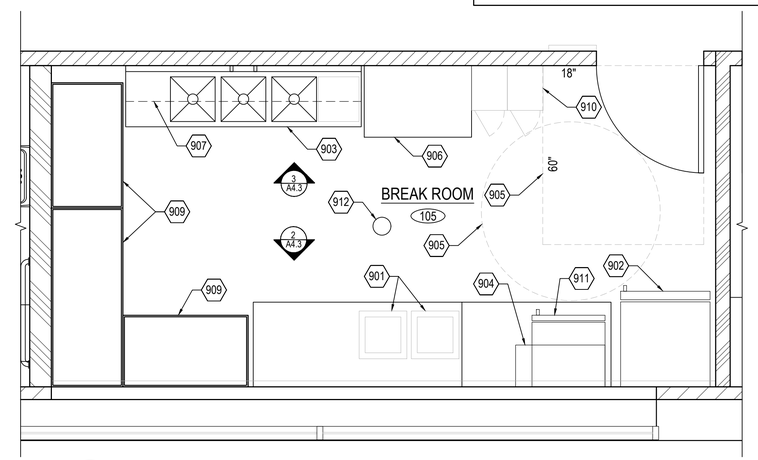

1 / A4.3 BREAK ROOM ENLARGED PLAN
SCALE: 1/2" = 1'-0"

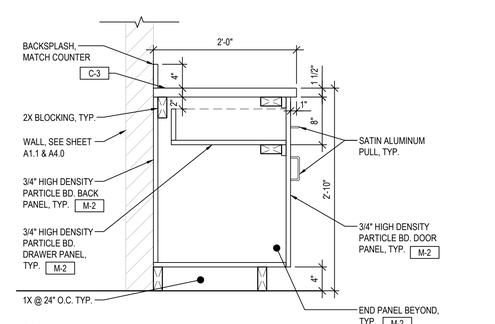

A / A4.3 BASE WALL CABINET
SCALE: 1" = 1'-0"

KURT L. SCHMITZ
LICENSED ARCHITECT
No. 51649
MINNESOTA

ADA ARCHITECTS, INC.
17710 Detroit Avenue Lakewood, Ohio 44107
Phone (216) 521-5134 Fax (216) 521-4824
www.adaarchitects.cc

dogtopia

DOGTOPIA

MAPLEWOOD, MN 55109

2017 WOODLYNN AVENUE

This document ("Instrument of Service") was prepared by ADA Architects, Inc. ("ADA") specifically for the referenced project and is not intended for any other use. ADA retains all common law, statutory and other reserved rights, including copyrights. This Instrument of Service shall not be used on other projects, for additions to this project or for completion of this project by others without ADA's prior written consent. Any unauthorized use of this Instrument of Service shall be at the User's sole risk and without liability to ADA. ADA makes no warranties, express or implied, of merchantability or of fitness for a particular purpose.

FRANCHISEE

LANG, BERT LLC

REVISIONS

#	DATE	TYPE
1		
2		
3		
4		
5		

BREAK ROOM DETAILS

DATE 03/23/20

JOB NO. 19492

A4.3

SHEET NO.

MATERIAL LEGEND

C-1	WILSONART D315-60 PLASTIC LAMINATE COUNTER IN "PLATINUM" OVER (2) LAYERS 3/4" HIGH-DENSITY PARTICLE BOARD
C-2	WISONART 1 1/2" QUARTZ COUNTER Q4007, COLOR: DUOMO
M-1	1-1/2" ARBORITE #W-458SR DURIVAGE SUPPORT LEGS IN "BEACH COMBED"
T-2	MOSAIC TILE, DALTILE. EPOXY GROUT "MAPEI #14 BISCUIT". SEE BELOW FOR TILE COLOR: FLOOR TO 4 1/2" A.F.F. = "ENGINE GREY" #RR13 4 1/2" A.F.F. AND HIGHER = "ORANGE SODA" #RR08

KEY NOTES

1001. ACCESSIBLE COUNTERTOP SECTION.
1002. PRINTER DRAWER.
1003. FILE CABINET DRAWER.
1004. TIERED HIGH COUNTER.
1005. LINE OF LOW WALL BELOW COUNTER.
1006. ALL OUTSIDE CORNERS OF COUNTERS SHALL BE ROUNDED. 1" RADIUS MIN. U.N.O.
1007. PROVIDE SCHLUTER END CAP TO FINISH TILE EDGES AT RECEPTION DESK.
1008. MINI FRIDGE.
1009. OWNER PROVIDED AND INSTALLED GRAPHICS ELEMENT.
1010. PROVIDE END PANEL AT BEVERAGE BAR.

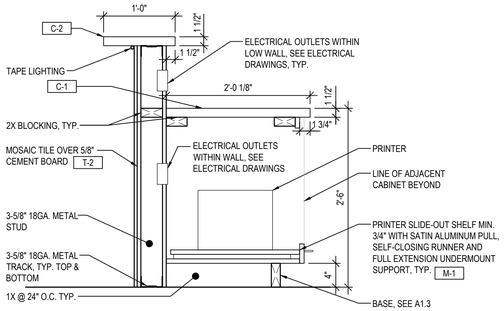

B / A4.4 LOBBY DESK SECTION
SCALE: 1" = 1'-0"

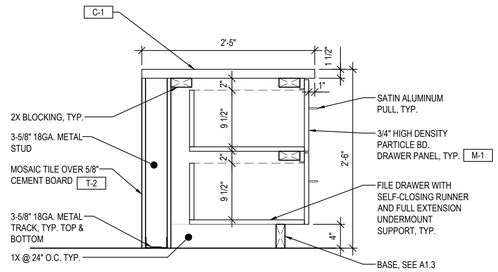

A / A4.4 LOBBY DESK SECTION
SCALE: 1" = 1'-0"

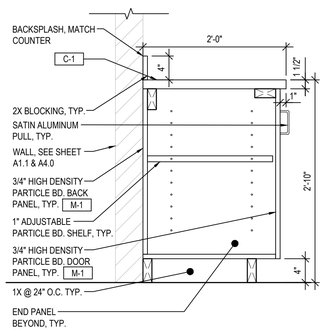

E / A4.4 BEVERAGE COUNTER SECTION
SCALE: 1" = 1'-0"

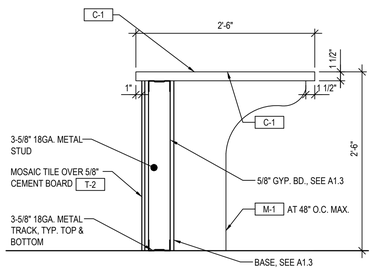

D / A4.4 LOBBY DESK SECTION
SCALE: 1" = 1'-0"

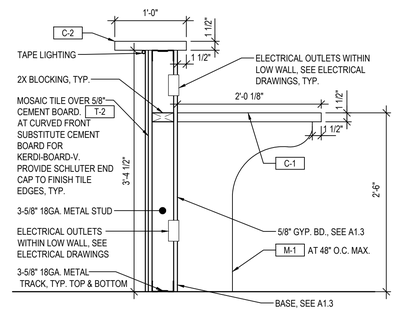

C / A4.4 RECEPTION DESK SECTION
SCALE: 1" = 1'-0"

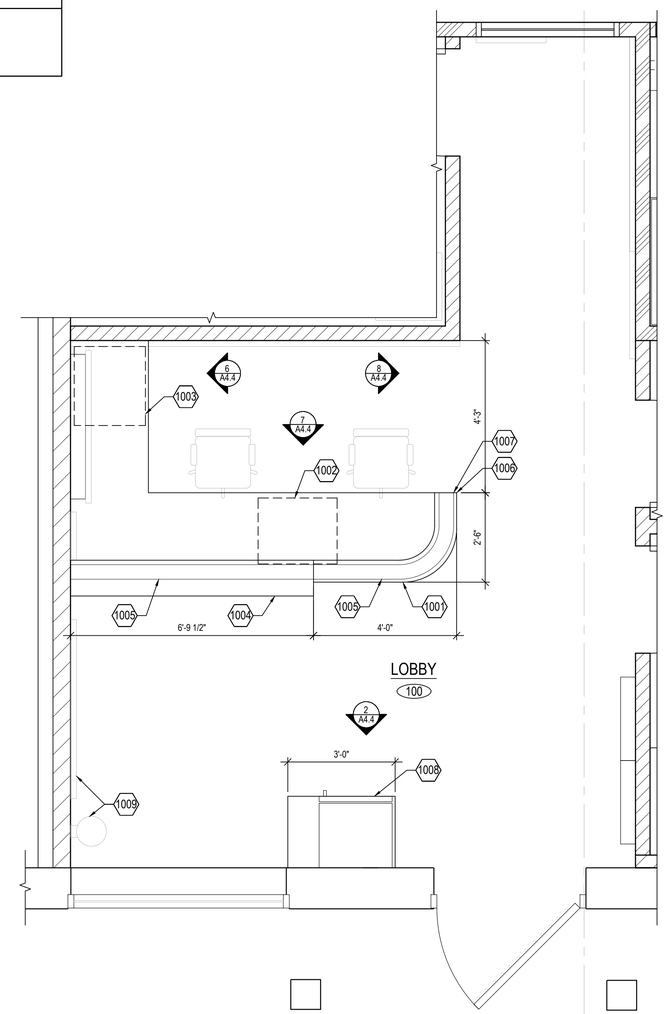

1 / A4.4 ENLARGED LOBBY PLAN
SCALE: 1'-0"

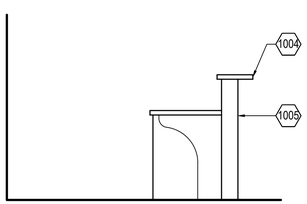

8 / A4.4 RECEPTION DESK ELEVATION
SCALE: 1/2" = 1'-0"

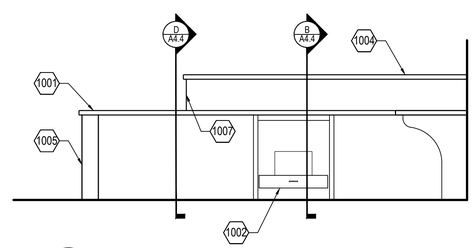

7 / A4.4 RECEPTION DESK ELEVATION
SCALE: 1/2" = 1'-0"

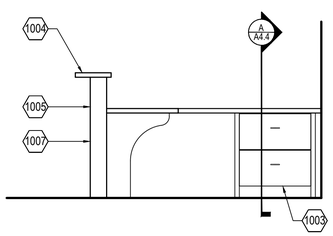

6 / A4.4 RECEPTION DESK ELEVATION
SCALE: 1/2" = 1'-0"

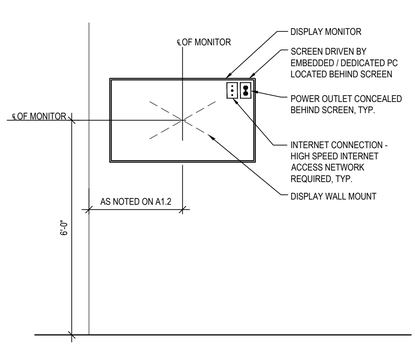

5 / A4.4 INDOOR PLAYROOM MONITOR
SCALE: 1/2" = 1'-0"

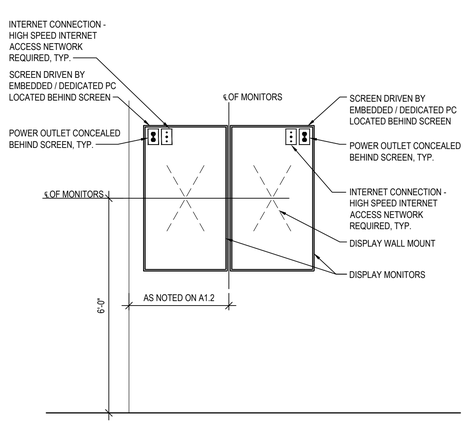

4 / A4.4 DIGITAL MENU BOARDS
SCALE: 1/2" = 1'-0"

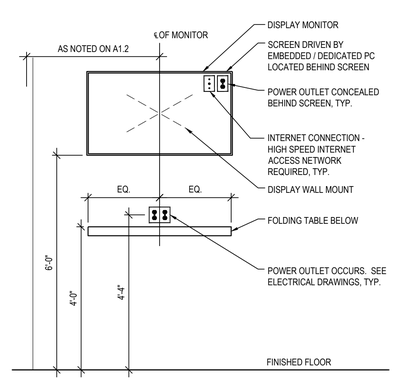

3 / A4.4 PLAYROOM WORKSTATION MONITOR
SCALE: 1/2" = 1'-0"

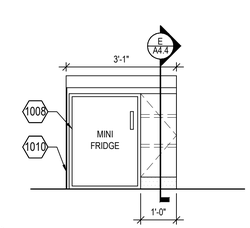

2 / A4.4 BEVERAGE COUNTER ELEVATION
SCALE: 1/2" = 1'-0"

KURT L. SCHMITZ
LICENSED ARCHITECT
No. 51649
MINN.

ADA ARCHITECTS, INC.
17710 Detroit Avenue Lakewood, Ohio 44107
Phone (216) 521-5134 Fax (216) 521-4824
www.adaarchitects.cc

dogtopia

DOGTOPIA

MAPLEWOOD, MN 55109

2017 WOODLYNN AVENUE

This document ("Instrument of Service") was prepared by ADA Architects, Inc. ("ADA") specifically for the referenced project and is not intended for any other use. ADA retains all common law, statutory and other reserved rights, including copyrights. This Instrument of Service shall not be used on other projects, for additions to this project or for completion of this project by others without ADA's prior written consent. Any unauthorized use of this Instrument of Service shall be at the User's sole risk and without liability to ADA. ADA makes no warranties, express or implied, of merchantability or of fitness for a particular purpose.

FRANCHISEE
LANG, BERT LLC

REVISIONS

#	DATE	TYPE
1		
2		
3		
4		
5		

LOBBY DETAILS

DATE 03/23/20
JOB NO. 19492

A4.4
SHEET NO.

DOOR AND FRAME SCHEDULE

DOOR NO.	SIZE	DOOR TYPE	DOOR MAT'L	DOOR FINISH	FRAME TYPE	FRAME MAT'L	FRAME FINISH	FIRE LABEL	HARDWARE GROUP	HEAD/JAMB DETAIL	REMARKS
01	3'-0" x 7'-0" x 1 3/4"	-	-	-	-	-	-	-	ETR	ETR	RE-KEY.
02	3'-0" x 7'-0" x 1 3/4"	A	S.C. WOOD	PAINTED	1	H.M.	PAINTED	-	5	A&B/A5.0	UNDERCUT DOOR TO PROVIDE 1" CLEARANCE.
03	3'-0" x 7'-0" x 1 3/4"	A	S.C. WOOD	PAINTED	1	H.M.	PAINTED	-	4	A&B/A5.0	
04	3'-0" x 7'-0" x 1 3/4"	E	S.C. WOOD	PAINTED	1	H.M.	PAINTED	-	7	A&B/A5.0	FULL GLASS WOOD. RADIUS DOOR EDGE ; R 0.1875".
05	3'-0" x 7'-0" x 1 3/4"	B	S.C. WOOD	PAINTED	1	H.M.	PAINTED	-	2	A&B/A5.0	RADIUS DOOR EDGE ; R 0.1875".
06	3'-0" x 7'-0" x 1 3/4"	B	S.C. WOOD	PAINTED	1	H.M.	PAINTED	-	2	A&B/A5.0	RADIUS DOOR EDGE ; R 0.1875".
07	3'-0" x 7'-0" x 1 3/4"	B	S.C. WOOD	PAINTED	1	H.M.	PAINTED	-	2	A&B/A5.0	RADIUS DOOR EDGE ; R 0.1875".
08	3'-0" x 7'-0" x 1 3/4"	B	S.C. WOOD	PAINTED	1	H.M.	PAINTED	-	2	A&B/A5.0	RADIUS DOOR EDGE ; R 0.1875".
09	3'-0" x 7'-0" x 1 3/4"	A	S.C. WOOD	PAINTED	1	H.M.	PAINTED	-	3	A&B/A5.0	STORAGE LOCKSET.
10	3'-0" x 7'-0" x 1 3/4"	B	S.C. WOOD	PAINTED	1	H.M.	PAINTED	-	2	A&B/A5.0	RADIUS DOOR EDGE ; R 0.1875".
11	2'-1" x 2'-8" x 1 3/4"	D	S.C. WOOD	PAINTED	4	H.M.	PAINTED	-	8	A&B/A5.0	RADIUS DOOR EDGE ; R 0.1875".
12	3'-0" x 7'-0" x 1 3/4"	C	S.C. WOOD	PAINTED	1	H.M.	PAINTED	-	6	A&B/A5.0	
13	3'-0" x 7'-0" x 1 3/4"	C	S.C. WOOD	PAINTED	1	H.M.	PAINTED	-	6	A&B/A5.0	
14	3'-0" x 7'-0" x 1 3/4"	C	S.C. WOOD	PAINTED	1	H.M.	PAINTED	-	6	A&B/A5.0	
15	3'-0" x 7'-0" x 1 3/4"	C	S.C. WOOD	PAINTED	1	H.M.	PAINTED	-	6	A&B/A5.0	
16	2'-5" x 3'-0" x 1 3/4"	D	S.C. WOOD	PAINTED	3	H.M.	PAINTED	-	8	A&B/A5.0	RADIUS DOOR EDGE ; R 0.1875".
17	3'-0" x 7'-0" x 1 3/4"	B	S.C. WOOD	PAINTED	1	H.M.	PAINTED	-	2	A&B/A5.0	RADIUS DOOR EDGE ; R 0.1875".
18	3'-0" x 7'-0" x 1 3/4"	B	S.C. WOOD	PAINTED	1	H.M.	PAINTED	-	2	A&B/A5.0	RADIUS DOOR EDGE ; R 0.1875".
19	2'-5" x 3'-0" x 1 3/4"	D	S.C. WOOD	PAINTED	3	H.M.	PAINTED	-	8	A&B/A5.0	RADIUS DOOR EDGE ; R 0.1875".
20	3'-0" x 7'-0" x 1 3/4"	F	H.M.	PAINTED	2	H.M.	PAINTED	-	1	C&D/A5.0	VERIFY OPENING SIZE IN FIELD BEFORE ORDERING DOOR.
21	3'-0" x 7'-0" x 1 3/4"	C	S.C. WOOD	PAINTED	1	H.M.	PAINTED	-	6	A&B/A5.0	
22	3'-0" x 3'-4" x 1 3/4"	C	S.C. WOOD	PAINTED	1	H.M.	PAINTED	-	6	A&B/A5.0	
23	3'-0" x 7'-0" x 1 3/4"	F	H.M.	PAINTED	2	H.M.	PAINTED	-	1	C&D/A5.0	VERIFY OPENING SIZE IN FIELD BEFORE ORDERING DOOR.
24	3'-0" x 7'-0" x 1 3/4"	F	H.M.	PAINTED	2	H.M.	PAINTED	-	1	C&D/A5.0	VERIFY OPENING SIZE IN FIELD BEFORE ORDERING DOOR.
25	3'-0" x 7'-0" x 1 3/4"	-	-	-	-	-	-	-	ETR	ETR	PERMANENTLY LOCK IN PLACE.
26	4'-0" x 7'-0" x 1 3/4"	-	-	-	-	-	-	-	ETR	ETR	PERMANENTLY LOCK IN PLACE.
27	3'-0" x 8'-0" x 1 3/4"	-	VINYL	-	-	-	-	-	-	-	EXTERIOR GATE.

DOOR SCHEDULE NOTES

1. RATED DOORS SHALL BE A TIGHT-FITTING SMOKE AND DRAFT CONTROL ASSEMBLY.
2. ALL EXISTING/NEW DOORS AND HARDWARE SHALL COMPLY WITH CURRENT ADA REGULATIONS.
3. ALL INTERIOR/EXTERIOR METAL DOORS SHALL BE 20 GA. MINIMUM.
4. EXTERIOR DOORS SHALL BE OPERABLE FROM THE INSIDE WITHOUT THE USE OF A KEY, SPECIAL KNOWLEDGE OR EFFORT.
5. OPENINGS SHALL BE A MINIMUM OF 32" WIDE WHEN DOOR IS AT RIGHT ANGLE TO CLOSED POSITION.
6. BOTTOM 10" OF ALL DOORS SHALL HAVE A SMOOTH, UNINTERRUPTED SURFACE FOR OPENING BY WHEELCHAIR FOOT REST.
7. MAXIMUM EFFORT TO OPERATE DOORS SHALL NOT EXCEED 5 LBS. FOR EXTERIOR DOORS, AND 3 LBS. FOR INTERIOR DOORS WITH A PUSH OR PULL EFFORT BEING APPLIED AT RIGHT ANGLES TO HINGED DOOR AND AT THE CENTER PLANE OF SLIDING OR FOLDING DOORS. COMPENSATING DEVICES OR AUTOMATIC DOOR OPERATIONS MAY BE UTILIZED TO MEET THE ABOVE STANDARDS, WHEN FIRE DOORS ARE REQUIRED. THE MAXIMUM EFFORT TO OPERATE THE DOORWAY MAY BE INCREASED NOT TO EXCEED 14 LBS. W/ CLOSURE.
8. NO SUBSTITUTIONS.
9. PROVIDE A SIGN ABOVE ALL ENTRANCE DOOR STATING THAT "THIS DOOR IS TO REMAIN UNLOCKED DURING BUSINESS HOURS". LETTERS SHALL BE AT LEAST 1" IN HEIGHT AND SHALL BE WHITE ON A CONTRASTING BACKGROUND.
10. CONTRACTOR SHALL COORDINATE KEYING OF LOCKS WITH OWNER PRIOR TO INSTALLATION. **ALL EXTERIOR DOORS TO BE RE-KEYED. PROVIDE MIN. (6) KEYS TO OWNER.**
11. PROVIDE 8" HIGH WHITE VINYL NUMBERS STATING STREET ADDRESS IN HELVETICA FONT STYLE ON TRANSOM AT MAIN ENTRY DOOR.

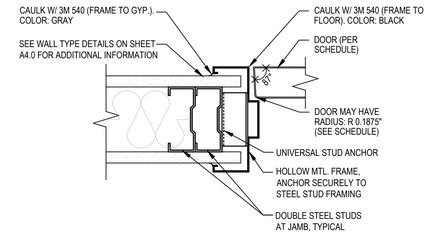

A / A5.0 TYP. INTERIOR DOOR JAMB DETAIL
SCALE: 3" = 1'-0"

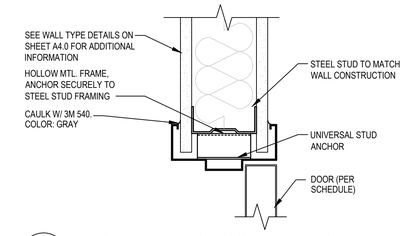

B / A5.0 TYP. INTERIOR DOOR HEAD DETAIL
SCALE: 3" = 1'-0"

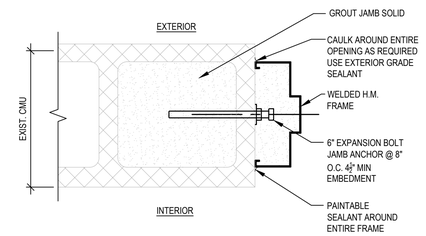

C / A5.0 TYP. EXTERIOR DOOR JAMB DETAIL
SCALE: 3" = 1'-0"

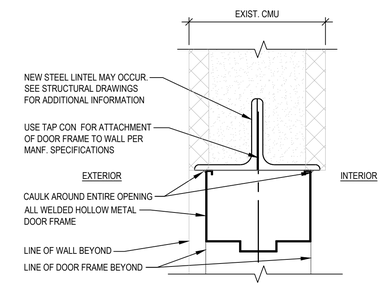

D / A5.0 TYP. EXTERIOR DOOR HEAD DETAIL
SCALE: 3" = 1'-0"

HARDWARE GROUP

GROUP #1 (EXTERIOR PLAY DOOR)		GROUP #2 (PLAYROOM, SPA, EVAL, SUITES, BREAK ROOM)		GROUP #3 (STORAGE)		GROUP #4 (OFFICE)		GROUP #5 (RESTROOM)		GROUP #6 (UTILITY)		GROUP #7 (LOBBY)		GROUP #8 (THRU-WALL CRATES)	
HINGE:	STANLEY: 780-224HD-84" ALUMINUM CONTINUOUS HINGE FOR 7'-0" DOOR	HINGE:	STANLEY: 04-4786 STAINLESS STEEL, 4-1/2 x 4-1/2 - SET OF (3)	HINGE:	STANLEY: FBB179 STAINLESS STEEL, 4-1/2 x 4-1/2 - SET OF (3)	HINGE:	STANLEY: FBB179 STAINLESS STEEL, 4-1/2 x 4-1/2 - SET OF (3)	HINGE:	STANLEY: FBB179 STAINLESS STEEL, 4-1/2 x 4-1/2 - SET OF (3)	HINGE:	STANLEY: FBB179 STAINLESS STEEL, 4-1/2 x 4-1/2 - SET OF (3)	HINGE:	STANLEY: 04-4786 STAINLESS STEEL, 4-1/2 x 4-1/2 - SET OF (3)	HINGE:	STANLEY: FBB179 STAINLESS STEEL, 4-1/2 x 4-1/2 - SET OF (2) (HINGES ON EVALUATION SIDE)
EXIT DEVICE :	MONARCH: 19-R-L-DANE, US32D/STAINLESS STEEL	LOCKSET:	FALCON: W101A626, SATIN CHROME, PASSAGE (NOT KEYED)	LOCKSET:	FALCON: W581A626, SATIN CHROME, STOREROOM KEYED LOCK	LOCKSET:	FALCON: W511A626, SATIN CHROME, KEYED LOCK	LOCKSET:	FALCON: H2171A626, SATIN CHROME, PRIVACY LOCK	LOCKSET:	FALCON: W101A626, SATIN CHROME, PASSAGE (NOT KEYED)	LOCKSET:	FALCON: W101A626, SATIN CHROME, PASSAGE (NOT KEYED)	LOCKSET:	FALCON: W101PLAIN626, SATIN CHROME, PASSAGE (NOT KEYED). NO KNOB ON PLAYROOM SIDE.
LEVER:	MONARCH: "DANE" US32D/STAINLESS STEEL	CLOSER:	DORMA: 8916-AF89P DP89 SATIN CHROME, TOP JAMB MOUNTED WITH 90 DEGREE HOLD-OPEN	WALL STOP:	DON JO: 1407-630 #US26 (USE 1440-626 WHEN WALL STOP NOT POSSIBLE)	WALL STOP:	DON JO: 1407-630 #US26 (USE 1440-626 WHEN WALL STOP NOT POSSIBLE)	CLOSER:	DORMA: 8916-AF89P DP89 SATIN CHROME, TOP JAMB MOUNTED WITH 90 DEGREE HOLD-OPEN	WALL STOP:	DON JO: 1407-630 #US26 (USE 1440-626 WHEN WALL STOP NOT POSSIBLE)	CLOSER:	DORMA: 8916-AF89P DP89 SATIN CHROME, TOP JAMB MOUNTED WITH 90 DEGREE HOLD-OPEN	WALL STOP:	DON JO: 1407-630 #US26 (WHERE A PERPENDICULAR WALL IS WITHIN 6" OF DOOR WHEN OPENED)
KICK PLATE:	HIAWATHA: KP34x34 SATIN STAINLESS STEEL @ PUSH SIDE ONLY. NO SHARP EDGES.	WALL STOP:	DON JO: 1407-630 #US26 (USE 1440-626 WHEN WALL STOP NOT POSSIBLE)	SILENCER:	IVES: SR64, US26D SATIN CHROME	SILENCER:	IVES: SR64, US26D SATIN CHROME	WALL STOP:	DON JO: 1407-630 #US26 (USE 1440-626 WHEN WALL STOP NOT POSSIBLE)	SILENCER:	IVES: SR64, US26D SATIN CHROME	WALL STOP:	DON JO: 1407-630 #US26 (USE 1440-626 WHEN WALL STOP NOT POSSIBLE)	KICK PLATE:	HIAWATHA: KP8x34-32D STAINLESS STEEL @ BOTH SIDES, BEVEL EDGES
THRESHOLD:	REESE: S514-36 OR S424-36, FINISH TO MATCH DOOR, INSTALL IN NON-SHRINK STRUCTURAL GROUT BED	SILENCER:	IVES: SR64, US26D SATIN CHROME	KICK PLATE:	HIAWATHA: KP8x34-32D STAINLESS STEEL @ BOTH SIDES. NO SHARP EDGES.	KICK PLATE:	HIAWATHA: KP8x34-32D STAINLESS STEEL @ BOTH SIDES. NO SHARP EDGES.	SILENCER:	IVES: SR64, US26D SATIN CHROME	KICK PLATE:	HIAWATHA: KP34x34-32D STAINLESS STEEL @ BOTH SIDES. NO SHARP EDGES.	SILENCER:	IVES: SR64, US26D SATIN CHROME		
DOOR SWEEP:	PEMKO: SFSC-200-36, INSTALL WITH WEATHER STRIPPING	KICK PLATE:	HIAWATHA: KP34x34-32D STAINLESS STEEL @ BOTH SIDES. NO SHARP EDGES.	KICK PLATE:	HIAWATHA: KP8x34-32D STAINLESS STEEL @ BOTH SIDES. NO SHARP EDGES.	THRESHOLD:	ROPPE: REDUCER STRIP IN JET BLACK @ RUBBER TO V.C.T. TRANSITION	KICK PLATE:	HIAWATHA: KP8x34-32D STAINLESS STEEL @ BOTH SIDES. NO SHARP EDGES.	KICK PLATE:	HIAWATHA: KP8x34-32D STAINLESS STEEL @ BOTH SIDES. NO SHARP EDGES.	KICK PLATE:	HIAWATHA: KP8x34-32D STAINLESS STEEL @ BOTH SIDES. NO SHARP EDGES.		
CLOSER:	DORMA: 8916-AF89P DP89 SATIN CHROME, TOP JAMB MOUNTED WITH 90 DEGREE HOLD-OPEN	THRESHOLD:	ROPPE: REDUCER STRIP IN JET BLACK @ RUBBER TO V.C.T. TRANSITION	THRESHOLD:	ROPPE: REDUCER STRIP IN JET BLACK @ RUBBER TO V.C.T. TRANSITION	LOUVER:	DAYTON: 5NKL8 ALUMINUM 22x18 PREFINISHED GRAY	THRESHOLD:	ROPPE: REDUCER STRIP IN JET BLACK @ RUBBER TO V.C.T. TRANSITION	THRESHOLD:	ROPPE: REDUCER STRIP IN JET BLACK @ RUBBER TO V.C.T. TRANSITION	THRESHOLD:	ROPPE: REDUCER STRIP IN JET BLACK @ RUBBER TO V.C.T. TRANSITION		
DOOR STOP:	DON-JO: 1407-630 #US26 (USE 1440-626 WHEN WALL STOP NOT POSSIBLE)	GLAZING:	AIR LOUVERS: SLIMLINE 24x24x1/4" LITE KIT (22x22 GLASS VISIBLE), PAINT FRAME									GLAZING:	AIR LOUVERS: SLIMLINE 24x66x1/4" LITE KIT (22x64 GLASS VISIBLE), PAINT FRAME		
GLAZING:	24x24x1/4" LITE KIT (22x22 GLASS VISIBLE), PAINT FRAME														

DOOR TYPES

NOTE:
1. DOORS TO BE PAINTED W-6, REFERENCE FINISH SCHEDULE ON A1.3 FOR ADDITIONAL INFORMATION.
2. ALL WORK TO BE DONE BY G.C. U.N.O.
3. REFERENCE DOOR & FRAME SCHEDULE FOR MATERIALS.
4. ALL GLASS TO BE TEMPERED.
5. ALL INTERIOR/EXTERIOR METAL DOORS SHALL BE 20 GA. MINIMUM.

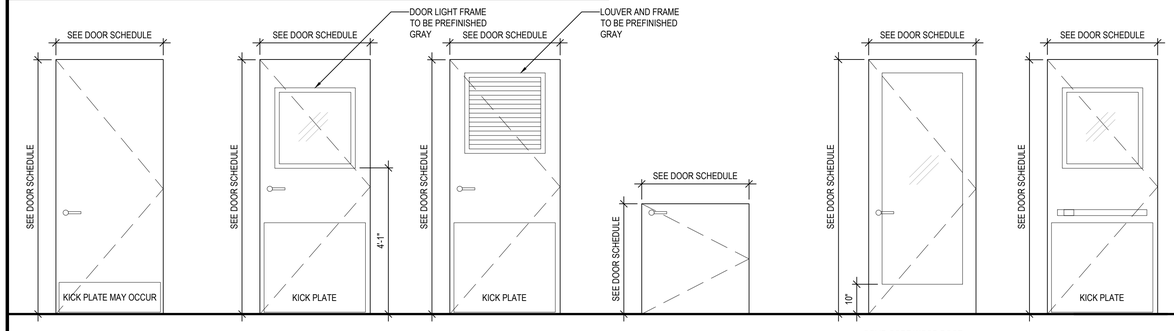

A SOLID CORE WOOD DOOR | B SOLID CORE WOOD DOOR WITH HALF LIGHT | C SOLID CORE WOOD DOOR WITH VENT | D HALF- HEIGHT WOOD DOOR | E SOLID CORE WOOD DOOR WITH FULL LIGHT | F EXTERIOR HOLLOW METAL DOOR

FRAME TYPES

NOTE:
1. HOLLOW METAL DOOR FRAMES TO BE PAINTED W-6, REFERENCE FINISH SCHEDULE ON A1.3 FOR ADDITIONAL INFORMATION.
2. ALL WORK TO BE DONE BY G.C. U.N.O.
3. REFERENCE DOOR & FRAME SCHEDULE FOR MATERIALS.
4. INTERIOR DOOR FRAMES SHALL BE 20 GA. MINIMUM.
5. EXTERIOR DOOR FRAMES SHALL BE ALL WELDED 16 GA. MINIMUM.

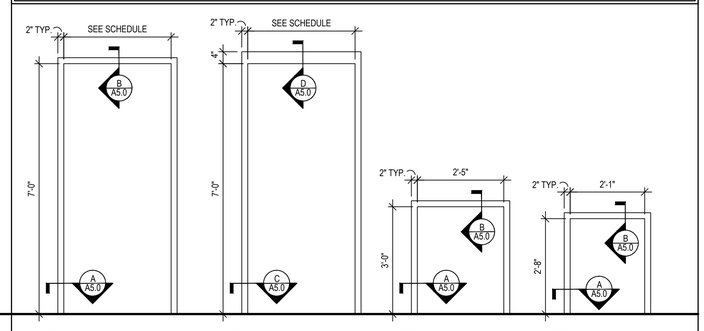

1 HOLLOW METAL DOOR FRAME | 2 HOLLOW METAL DOOR FRAME | 3 HOLLOW METAL DOOR FRAME | 4 HOLLOW METAL DOOR FRAME

KURT L. SCHMITZ
LICENSED ARCHITECT
No. 51649
MINNESOTA

ADA ARCHITECTS, INC.
17710 Detroit Avenue Lakewood, Ohio 44107
Phone (216) 521-5134 Fax (216) 521-4824
www.adaarchitects.cc

dogtopia

DOGTOPIA

2017 WOODLYNN AVENUE MAPLEWOOD, MN 55109

This document ("Instrument of Service") was prepared by ADA Architects, Inc. ("ADA") specifically for the referenced project and is not intended for any other use. ADA retains all common law, statutory and other reserved rights, including copyrights. This Instrument of Service shall not be used on other projects, for additions to this project or for completion of this project by others without ADA's prior written consent. Any unauthorized use of this Instrument of Service shall be at the User's own risk and without liability to ADA. ADA makes no warranties, express or implied, of merchantability or of fitness for a particular purpose.

FRANCHISEE
LANG, BERT LLC

REVISIONS

#	DATE	TYPE
1		
2		
3		
4		
5		

DOOR SCHEDULE AND DETAILS

DATE 03/23/20

JOB NO. 19492

A5.0
SHEET NO.

1 STRUCTURAL DESIGN CRITERIA

STRUCTURAL DESIGN CRITERIA

A. THE DESIGN AND CONSTRUCTION OF THIS PROJECT IS GOVERNED BY THE "INTERNATIONAL BUILDING CODE (GOVERNING CODE)", 2018 EDITION, HEREAFTER REFERRED TO AS THE GOVERNING CODE. THIS INCLUDES ADOPTED AND MODIFIED BY THE LOCAL BUILDING DEPARTMENT WITH AUTHORITY HAVING JURISDICTION.
   1. REFER TO CHAPTER 35 OF THE GEVERNING CODE FOR ALL CURRENT REFERENCE STANDARDS BASED ON THE GOVERNING CODE. WHERE OTHER STANDARDS ARE NOTED IN THE DRAWINGS, USE THE LATEST EDITION OF THE STANDARD UNLESS A SPECIFIC DATE IS INDICATED. REFERENCE TO A SPECIFIC SECTION IN A CODE DOES NOT RELIEVE THE CONTRACTOR FROM COMPLIANCE WITH THE ENTIRE STANDARD. ALL SPECIFICATIONS AND CODES NOTED SHALL BE THE LATEST APPROVED EDITIONS AND REVISIONS BY THE AUTHORITY HAVING JURISDICTION OVER THIS PROJECT.
   2. RISK CATEGORY: = II

B. **ROOF DESIGN DATA**
   1. ROOF DEAD LOAD: = 20 PSF
   2. ROOF LIVE LOAD: = 20 PSF
   3. GROUND SNOW LOAD, (Pg): = 50 PSF
   4. FLAT ROOF SNOW LOAD, (Pf): = 35 PSF
   5. SNOW IMPORTANCE FACTOR, (Is): = 1.0
   6. SNOW EXPOSURE FACTOR, (Ce): = 1.0
   7. THERMAL FACTOR, (Ct): = 1.0
   8. SLOPE FACTORS(S), (Cs): = 1.0
   9. SEE FRAMING PLANS FOR DRIFT LOCATION, WIDTHS AND LOADS IF APPLICABLE.

C. **FLOOR DESIGN DATA**
   1. FLOOR DEAD LOAD: = N/A
   2. FLOOR LIVE LOAD: = N/A

D. **EARTHQUAKE DESIGN DATA**
   1. MAPPED SPECTRAL RESPONSE ACC. FOR SHORT PERIOD, (Ss): = 0.047 G
   2. MAPPED SPECTRAL RESPONSE ACC. FOR 1-SEC PERIOD, (S1): = 0.029 G
   3. DESIGN SPECTRAL RESPONSE ACC. FOR SHORT PERIOD, (Sds): = 0.05 G
   4. DESIGN SPECTRAL RESPONSE ACC. FOR 1 PERIOD, (Sd1): = 0.047 G
   5. SITE CLASS: = D
   6. SEISMIC DESIGN CATEGORY: = A
   7. SEISMIC IMPORTANCE FACTOR, (Ie): = 1.0
   8. SEISMIC RESPONSE COEFFICIENT(S), (Cs): = N/A
   9. RESPONSE MODIFICATION COEFFICIENT(S), (R): = 6.5 (RTU)
   10. BASIC SEISMIC-FORCE-RESISTING-SYSTEM(S): = MECHANICAL COMPONENTS
   11. DESIGN BASE SHEAR(S): = N/A
   12. ANALYSIS PROCEDURE USED: = EQUIVALENT LATERAL FORCE PROCEDURE

E. **WIND DESIGN DATA**
   1. ULTIMATE DESIGN WIND SPEED (VULT): = 109 MPH
   2. WIND IMPORTANCE FACTOR, (Iw): = 1.0
   3. WIND EXPOSURE: = C
   4. INTERNAL PRESSURE COEFFICIENT(S): = 0.18
   5. UNFACTORED COMPONENTS & CLADDING ROOF PRESSURE: = 32 PSF
   6. UNFACTORED COMPONENTS & CLADDING WALL PRESSURE: = 32 PSF

F. **SOILS DESIGN DATA**
   1. ALLOWABLE SOIL BEARING PRESSURE: = 1,500 PSF (ASSUMED)
   2. MINIMUM FROST/BEARING DEPTH: = 42 IN
   3. GEOTECHNICAL REPORT PREPARED BY, (REPORT #): = N/A

G. **SPECIAL DESIGN DATA**
   1. SEE PLANS FOR ALL EQUIPMENT DESIGN WEIGHTS.

2 REINFORCING STEEL

A. ALL ARRANGEMENT AND DETAILING OF REINFORCING STEEL, INCLUDING BAR SUPPORTS AND SPACERS, SHALL BE IN ACCORDANCE WITH THE LATEST ACI 315 DETAILING MANUAL.
B. ASTM A615, GRADE 40 (#3 REBAR OR SMALLER), ASTM A615, GRADE 60 (#4 REBAR OR LARGER), ASTM A185, GRADE 65 (WELDED WIRE FABRIC SHEETS). BARS TO BE WELDED SHALL BE ASTM A706, GRADE 60.
C. DIMENSIONS OF REINFORCING ARE TO BAR CENTERLINES U.N.O. IN DRAWINGS.
D. MINIMUM CLEAR PROTECTION FOR REINFORCEMENT SHALL BE AS FOLLOWS:
   1. CONCRETE PLACED DIRECTLY AGAINST EARTH: = 3"
   2. FORMED SURFACES AND EXPOSED TO EXTERIOR (#5 BARS OR SMALLER): = 2"
   3. INTERIOR FACE OF WALLS: = 1 1/2"
E. ALL REINFORCEMENT SHALL BE COLD BENT, UNLESS OTHERWISE PERMITTED BY THE BUILDING OFFICIAL AND ENGINEER OF RECORD. REINFORCEMENT PARTIALLY EMBEDDED IN CONCRETE OR MASONRY SHALL NOT BE FIELD BENT, UNLESS PERMITTED BY THE BUILDING OFFICIAL AND ENGINEER OF RECORD RE: - / ---
F. MINIMUM REINFORCING LAP SPLICES/DEVELOPMENT LENGTHS (F'C = 3,000 PSI):

BAR SIZE	HOOK LENGTH (IN)	DEVL./SPLICE LENGTH (IN)
3	6	21
4	8	28
5	10	36
6	12	48

3 STRUCTURAL STEEL

A. ALL STEEL CONSTRUCTION SHALL CONFORM TO REQUIREMENTS SET FORTH IN THE LATEST EDITIONS OF AISC, " AMERICAN INSTITUTE OF STEEL CONSTRUCTION", AISC 341-10, " SEISMIC PROVISIONS FOR STRUCTURAL STEEL BUILDINGS, INCLUDING SUPPLEMENT NO 1, DATED 2010" AND AISC 360-10, "SPECIFICATIONS FOR STRUCTURAL STEEL BUILDINGS".
B. STEEL DESIGNATIONS:
   1. WIDE FLANGE SHAPES (BEAMS & COLUMNS) = ASTM A992 (GRADE 50)
   2. OTHER ROLLED SHAPES & PLATE = ASTM A36 (U.N.O.) PIPE
   3. COLUMNS = ASTM A53, GRADE 'B'
   4. STRUCTURAL HSS TUBING = ASTM A500, GRADE 'B' 46 KSI
C. ALL ANCHOR BOLTS, BOLTS AND LAGS IN WOOD SHALL CONFORM TO ASTM A307 STEEL U.N.O. AND SHALL HAVE STEEL WASHERS BENEATH ALL NUTS AND BOLT HEADS. IF A CERTAIN SITUATION IS NOT DETAILED USE A SIMILAR DETAIL. ALL STRUCTURAL BOLTS SHALL CONFORM TO ASTM A325-N. CONNECTIONS SHALL GENERALLY FOLLOW THE TYPES SHOWN IN AISC MANUAL OF STEEL CONSTRUCTION.
D. STEEL FABRICATOR SHALL ALSO INCLUDE AND COORDINATE ALL STRUCTURAL STEEL SHOWN ON ARCHITECTURAL SHEETS WITH THAT OF THE STRUCTURAL SHEETS, COORDINATE ANY STEEL NOT SHOWN ON STRUCTURAL DRAWINGS, CONTRACTOR TO VERIFY.
E. ALL BEAMS ELEVATIONS FOR JOISTS, BEAMS, AND COLUMN HEIGHTS SHALL BE COORDINATED AND VERIFIED BY THE CONTRACTOR. cw/ ARCH. ALL ELEVATIONS MUST BE APPROVED BY ENGINEER AND ARCHITECT OF RECORD IN THE SHOP DRAWING REVIEW PROCESS.
F. ALL STEEL WELDING SHALL CONFORM TO AWS D1.1 WITH E70XX ELECTRODES.
G. PROVIDE HIGH STRENGTH GROUT UNDER ALL STEEL BASE PLATES, F'c = 5,000 PSI, MIN.

4 STRUCTURAL WELDS

A. ALL WELDS ON MEMBERS COMPRISING THE SEISMIC-FORCE-RESISTING SYSTEM (MOMENT AND BRACE FRAMES) SHALL EMPLOY WELD FILLER METALS CLASSIFIED FOR NOMINAL 70 KSI TENSILE STRENGTH, REFERRED TO AS E70 ELECTRODES, MEETING THE FOLLOWING MINIMUM MECHANICAL PROPERTY REQUIREMENTS:
   1. CVN TOUGHNESS OF 20 FT-LB AT 0°F, USING AWS AS CLASSIFICATION TEST METHODS.
   2. CVN TOUGHNESS OF 40 FT-LB AT 70°F, USING THE TEST PROCEDURES PRESCRIBED IN APPENDIX A.
   3. YIELD STRENGTH: 58 KSI MINIMUM, USING BOTH THE AWS AS CLASSIFICATION TEST (FOR E70 CLASSIFICATION ELECTRODES) AND THE TEST PROCEDURES PRESCRIBED IN APPENDIX A.
   4. TENSILE STRENGTH: 70 KSI MINIMUM, USING BOTH THE AWS AS CLASSIFICATION TEST (FOR E70 CLASSIFICATION ELECTRODES" AND THE TEST PROCEDURES PRESCRIBED IN APPENDIX A.
   5. ELONGATION: 22% MINIMUM, USING BOTH THE AWS AS CLASSIFICATION TEST AND THE TEST PROCEDURES PRESCRIBED IN APPENDIX A.

SPECIAL INSPECTIONS PROGRAM
ESTABLISHED PER 2018 IBC CHAPTER 17

ITEM	CONTINUOUS	PERIODIC	COMMENTS
WELDING: STRUCTURAL STEEL			
MATERIAL VERIFICATION OF WELD FILLER MATERIALS			AISC 360, SECTION A3.5
COMPLETE AND PARTIAL PENETRATION	X		IBC 1704.3.1, AWS D1.1
MULTIPASS FILLET WELDS	X		
SINGLE PASS FILLETS > 5/16"	X		
SINGLE PASS FILLETS ≤ 5/16"		X	
FLOOR AND ROOF DECK WELDS		X	AWS D1.3
WELDED STUDS		X	IBC 1704.3
WELDING OF STAIRS AND RAILING SYSTEMS		X	IBC 1704.3
WELDING: REINFORCING STEEL			
VERIFICATION OF WELDABILITY OF STEEL OTHER THAN ASTM A 706		X	IBC 1704.3
FLEXURAL AND AXIAL STEEL INTERMEDIATE AND SPECIAL MOMENT FRAMES	X		IBC 1704.3
BOUNDARY ELEMENT STEEL IN SPECIAL REINFORCED SHEAR WALLS	X		IBC 1704.3
SHEAR STEEL	X		IBC 1704.3
OTHER REINFORCING STEEL		X	IBC 1704.3
SPECIAL CASES: (IBC 1704.13)			
EPOXY OR ADHESIVE ANCHOR PLACEMENT	X		BY BUILDING OFFICIAL
EXPANSION OR SCREW ANCHOR PLACEMENT	X		WHERE INDICATED ON DRAWINGS

ABBREVIATIONS

(E)	EXISTING
(F)	FUTURE
(N)	NEW
(R)	RENOVATE
℄	CENTERLINE
∅	DIAMETER OR ROUND
⊥	PERPENDICULAR
□	SQUARE
#	NUMBER OR POUND
@	AT
A.B.	ANCHOR BOLT
A.F.F.	ABOVE FINISH FLOOR
ABV.	ABOVE
ADJ.	ADJUSTABLE
AGG.	AGGREGATE
ALT.	ALTERNATIVE
ALUM.	ALUMINUM
APPROX.	APPROXIMATE
ARCH.	ARCHITECTURAL
B.O.	BOTTOM OF
B.O.C.	BOTTOM OF CONCRETE
B/T	BETWEEN
B.N.	BOUNDARY NAIL(ING)
B.U.	BUILT-UP
BD.	BOARD
BLDG.	BUILDING
BLK.	BLOCK
BM.	BEAM
BOT.	BOTTOM
C.C.	CENTER TO CENTER
C.I.	CAST IRON
C.I.P.	CAST IN PLACE
CMU	CONCRETE MASONRY UNIT
C.O.	CONCRETE OPENING
CLG.	CEILING
CLR.	CLEAR
CNTRSK.	COUNTERSUNK
COL.	COLUMN
CONC.	CONCRETE
CONT.	CONTINUOUS
CORR.	CORRIDOR
CW/	COORDINATE WITH
D.	DEEP
D.B.A.	DEFORMED BAR ANCHOR
D.F.	DOUGLAS FIR
DET.	DETAIL
DIA.	DIAMETER
DIAG.	DIAGONAL
DIM.	DIMENSION
DN.	DOWN
DWG.	DRAWING
E.B	EXPANSION BOLT
E.B.E.	ECCENTRICALLY BRACED FRAME
E.J.	EXPANSION JOINT
E.N.	EDGE NAIL(ING)
EA.	EACH
EL.	ELEVATION
ELEC.	ELECTRICAL
ELEV.	ELEVATOR
EOR	ENGINEER OF RECORD
ES.	EDGE SCREW
EQ.	EQUAL
EQUIP.	EQUIPMENT
EXP.	EXPANSION
EXT.	EXTERIOR
F.B.	FLAT BAR
F.D.	FLOOR DRAIN
F.O.	FACE OF
F.O.C.	FACE OF CURB/CONCRETE
F.O.F.	FACE OF FINISH
F.O.M.	FACE OF MASONRY
F.O.S.	FACE OF STUDS
F.O.T.	FACE OF TREAD
FDN.	FOUNDATION
FIN.	FINISH
FL.	FLOOR(ING)
FLASH.	FLASHING
F.S.	FAR SIDE
FT.	FOOT OR FEET
FTG.	FOOTING
FTW.	FIRE TREATED WOOD
FURR.	FURRING
GA.	GAUGE OR GAGE
GALV.	GALVANIZED
GSN	GENERAL STRUCTURAL NOTES
GYP.	GYPSUM
H.	HIGH
H.C.A.	HEADED CONCRETE ANCHOR
H.S.S.	HOLLOW STRUCTURAL STEEL
H.P.	HIGH POINT
HORIZ.	HORIZONTAL
HR.	HOUR
HT.	HEIGHT
HVAC	HEATING VENTILATING AND AIR CONDITIONING
I.D.	INSIDE DIAMETER
IN.	INCH
INSUL.	INSULATION
INT.	INTERIOR
JT.	JOINT
K.O.	KNOCKOUT
L.F.	LINEAL FEET OR FOOT
L.L.V.	LONG LEG VERTICAL
L.L.H.	LONG LEG HORIZONTAL
L.P.	LOW POINT
LSL	LAMINATED STRAND LUMBER
LAM.	LAMINATE
LVL	LAMINATED VENEER LUMBER
LBS.	POUNDS
M.B.	MACHINE BOLT
M.H.	MANHOLE
M.O.	MASONRY OPENING
MAX.	MAXIMUM
MECH.	MECHANICAL
MET.	METAL
MFR.	MANUFACTURER
MIN.	MINIMUM
MISC.	MISCELLANEOUS
MT'D	MOUNTED
MTRL	MATERIAL
N	NORTH
N.I.C.	NOT IN CONTRACT
N.S.	NEAR SIDE
N.T.S.	NOT TO SCALE
NO.	NUMBER
NOM.	NOMINAL
N.S.	NEAR SIDE
O/H	OVERHEAD
O/	OVER
O.A.	OVER ALL
O.C.	ON CENTER
O.D.	OUTSIDE DIAMETER
O.H.	OPPOSITE HAND
OPNG.	OPENING
OPP.	OPPOSITE
OZ.	OUNCE
PART.	PARTICLE
P/L	PROPERTY LINE
PL.	PLATE
PLYWD.	PLYWOOD
PRE-ENG.	PRE-ENGINEERED METAL BUILDING
PT.	POINT
P.S.L.	PARALLEL STRAND LUMBER
R.	RADIUS OR RISER
R.D.	ROOF DRAIN
R.O.	ROUGH OPENING
RE:	REFERENCE (CW/)
REINF.	REINFORCE(D)
REQ'D.	REQUIRED
RM.	ROOM
S.C.	SOLID CORE
S.F.	SQUARE FEET OR FOOT
S.S.	STAINLESS STEEL
SCHED.	SCHEDULE
SECT.	SECTION
SHT.	SHEET
SIM.	SIMILAR OR SIMILAR TO
SPECS.	SPECIFICATIONS
SQ.	SQUARE
STD.	STANDARD
STRUC.	STRUCTURAL
SUSP.	SUSPENDED
SYM.	SYMMETRICAL
T&G	TONGUE & GROOVE
T.O.B.	TOP OF BEAM
T.O.C.	TOP OF CURB/CONCRETE
T.O.D.	TOP OF DECK
T.O.M.	TOP OF MASONRY
T.O.S.	TOP OF SLAB
T.O.W.	TOP OF WALL
THK.	THICKNESS
TJI	TRUSS JOIST I-JOIST
TYP.	TYPICAL
U.B.C.	UNIFORM BUILDING CODE
U.O.N.	UNLESS OTHERWISE NOTED
U.N.O.	UNLESS NOTED OTHERWISE
V.I.F.	VERIFY IN FIELD
VERT.	VERTICAL
W/	WITH
W/O	WITHOUT
WD.	WOOD
W.	WIDE
W.P.	WORK POINT
W.W.F.	WELDED WIRE FABRIC

DOGTOPIA SHEET LIST

SHEET NUMBER	SHEET NAME
S1.0	GENERAL STRUCTURAL NOTES
S2.0	PARTIAL ROOF FRAMING PLAN
S3.0	FRAMING DETAILS

PROFESSIONAL ENGINEER
I hereby certify that this plan, specification, or report was prepared by me or under my direct supervision and that I am a duly Licensed Professional Engineer under the laws of the State of Minnesota.

Print Name Brian J. Sisloff
Signature:
03/23/2020
Date License # 50112

TAMARACK GROVE ENGINEERING
812 S. La Cassia Drive
Boise, ID 83705
(208) 345-8941
fax (208) 345-8946
web www.tamarackgrove.com
firm Firm No. 812160000034

Project No: TGE20-14077
Checked By: DDH
Drawn By: DB

ADA ARCHITECTS, INC.
17710 Detroit Avenue Lakewood, Ohio 44107
Phone (216) 521-5134 Fax (216) 521-4824
www.adadesignbuild.com

dogtopia

DOGTOPIA

2017 WOODLYNN AVENUE

MAPLEWOOD, MN 55109

This document ("Instrument of Service") was prepared by ADA Architects, Inc. ("ADA") specifically for the referenced project and is not intended for any other use. ADA retains all common law, statutory and other reserved rights, including copyright. The Instrument of Service shall not be used on other projects, for additions to this project, for completion of this project by others, nor for other purposes without the written consent of ADA. User's sole risk and without liability to ADA. ADA makes no warranties, express or implied, of merchantability or of fitness for a particular purpose.

FRANCHISEES

PAWS UP CAPITAL, LLC

REVISIONS

#	DATE	TYPE
1		
2		
3		
4		
5		

GENERAL STRUCTURAL NOTES

DATE 03/23/20

JOB NO. 19492

S1.0

SHEET NO.

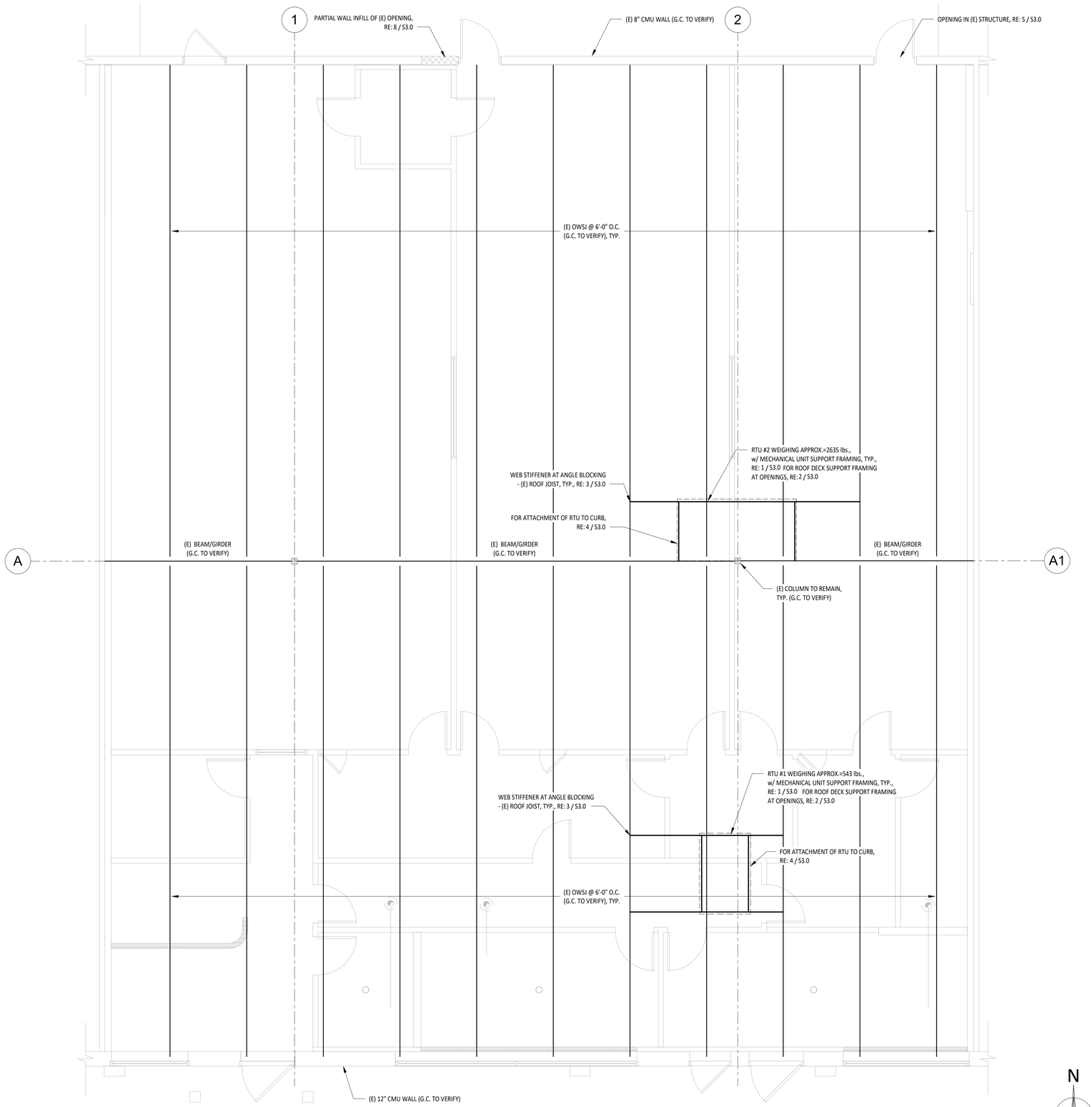

1 PARTIAL ROOF FRAMING PLAN
1/4" = 1'-0"

SHEET NOTES:

1. COORDINATE LOCATION OF ALL RTU'S WITH MECHANICAL E.O.R. SO THAT THE OPENINGS DO NOT INTERFERE WITH (E) FRAMING.
2. G.C. TO VERIFY JOIST SIZE AND SPACING. IT IS THE G.C.'S RESPONSIBILITY TO NOTIFY THE EOR OF ANY DISCREPANCY IN THE MEMBER SIZES NOTED IN PLANS.
3. G.C. TO VERIFY COLUMN LOCATIONS AND SIZES, TYP.
4. G.C. TO VERIFY THAT (N) RTU OPENINGS DO NOT INTERFERE WITH (E) OPEN WEB JOISTS, COORD, w/ MECH.
5. WHERE (N) RTU UNITS HAVE THE SAME FOOTPRINT AS (E) UNITS, AND (E) PERIMETER SUPPORT FRAMING UNDER THE NEW UNIT IS PRESENT, NO ADDITIONAL SUPPORT FRAMING IS NEEDED, RE: 1 / S3.0
6. WHERE (N) RTU UNITS ARE USING (E) DUCT OPENINGS AND (E) DECK SUPPORT FRAMING IS PRESENT AT OPENINGS. NO ADDITIONAL ROOF DECK SUPPORT FRAMING AT OPENINGS IS NEEDED, RE: 2 / S3.0
7. WHERE (N) RTU UNITS HAVE THE SAME FOOTPRINT AS (E) UNITS AND (E) WEB STIFFENERS ARE PRESENT WHERE SUPPORT FRAMING INTERSECTS w/ (E) ROOF JOISTS, NO ADDITIONAL WEB STIFFENERS ARE NEEDED, RE: 3 / S3.0

PROFESSIONAL ENGINEER
I hereby certify that this plan, specification, or report was prepared by me or under my direct supervision and that I am a duly Licensed Professional Engineer under the laws of the State of Minnesota.

Print Name Brian J. Sialaff
Signature
Date 03/23/2020 License # 50112

TAMARACK GROVE ENGINEERING
812 S. La Cassia Drive
Boise, ID 83705
(208) 345-8941
fax (208) 345-8946
web www.tamarackgrove.com
firm Firm No. 812160000034

Project No: TGE20-14077
Checked By: DDH
Drawn By: DB

ADA ARCHITECTS, INC.
17710 Detroit Avenue Lakewood, Ohio 44107
Phone (216) 521-5134 Fax (216) 521-4824
www.adaarchitects.cc

dogtopia

DOGTOPIA

MAPLEWOOD, MN 55109

2017 WOODLYNN AVENUE

This document ("Instrument of Service") was prepared by ADA Architects, Inc. ("ADA") specifically for the referenced project and is not intended for any other use. ADA retains all common law, statutory and other reserved rights, including copyrights. This Instrument of Service shall not be used on other projects, for additions to this project, or for completion of this project by others, unless ADA is provided adequate compensation for its services. ADA makes no warranties, express or implied, of merchantability or of fitness for a particular purpose. User's sole risk and without liability to ADA, ADA makes no warranties, express or implied, of merchantability or of fitness for a particular purpose.

FRANCHISEES
PAWS UP CAPITAL, LLC

REVISIONS

#	DATE	TYPE
1		
2		
3		
4		
5		

PARTIAL ROOF FRAMING PLAN

DATE 03/23/20

JOB NO. 19492

S2.0
SHEET NO.

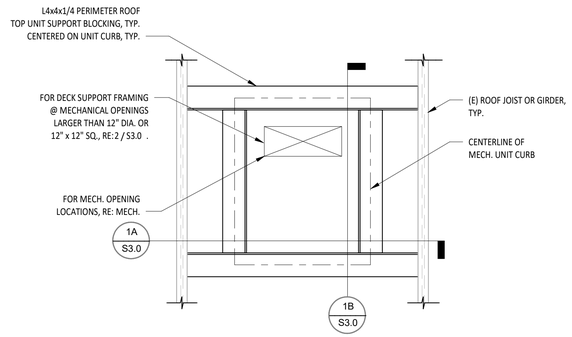

1 MECHANICAL UNIT/CURB SUPPORT FRAMING
1" = 1'-0"

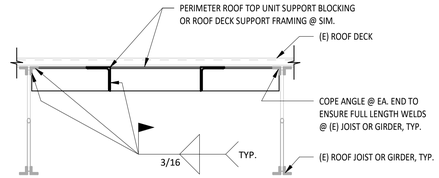

NOTE:
1. FOR JOIST WEB STIFFENERS AS REQUIRED FOR UNITS INDICATED ON PLANS, RE: 3 / S3.0 (NOT SHOWN FOR CLARITY)

1A UNIT/CURB SUPPORT FRAMING SECTION
1" = 1'-0"

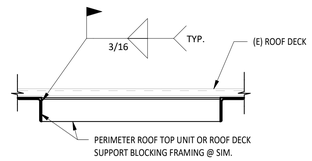

1B UNIT/CURB SUPPORT FRAMING SECTION
1" = 1'-0"

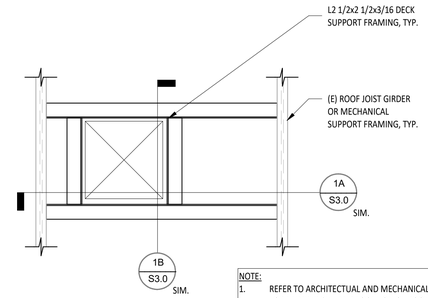

NOTE:
1. REFER TO ARCHITECTUAL AND MECHANICAL DRAWINGS FOR NUMBER SIZE AND LOCATION OF ROOF OPENINGS, PROVIDE STEEL FRAME FOR ALL OPENIGS LARGER THAN 12" DIA. OR 12"x12" SQ.
2. G.C. TO ENSURE THAT NO (E) STRUCTURAL RAMING MEMBERS ARE CUT OR DAMAGED WHEN OPENING IS CUT.
3. FASTEN SUPPORT FRAMING TO (E) ROOF DECK AROUND MECH OPENING w/ #10 TEK SCREWS @ 6" O.C.

2 ROOF DECK SUPPORT FRAMING
1" = 1'-0"

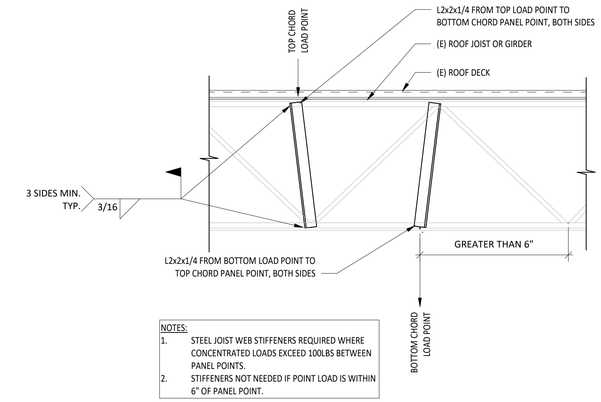

NOTES:
1. STEEL JOIST WEB STIFFENERS REQUIRED WHERE CONCENTRATED LOADS EXCEED 100LBS BETWEEN PANEL POINTS.
2. STIFFENERS NOT NEEDED IF POINT LOAD IS WITHIN 6" OF PANEL POINT.

3 STEEL JOIST WEB STIFFENERS
1" = 1'-0"

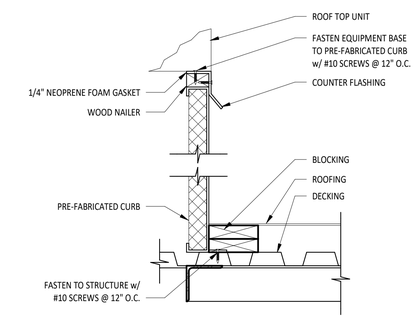

4 EQUIPMENT TO CURB DETAIL
1 1/2" = 1'-0"

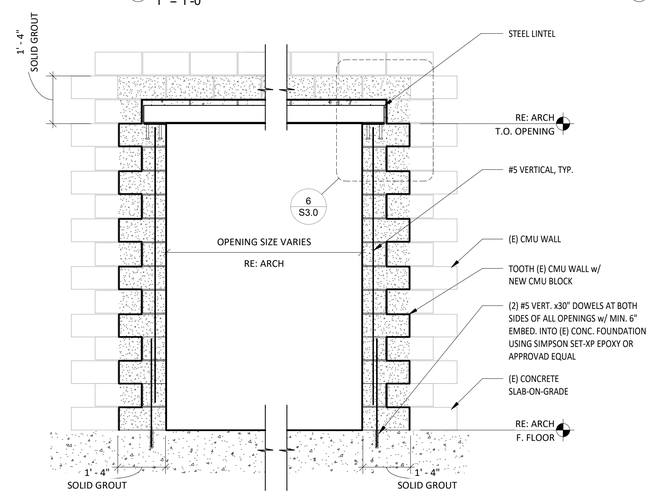

5 CMU WALL OPENING (8'-0" WIDE MAX)
1/2" = 1'-0"

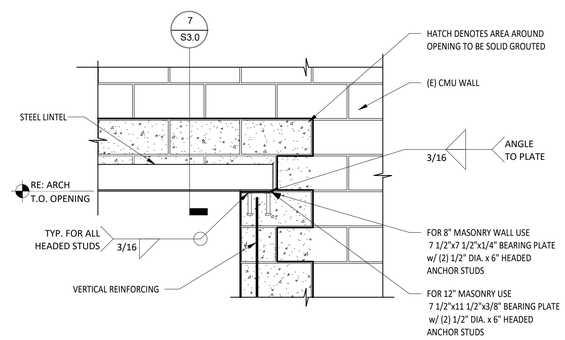

6 LINTEL AND JAMB REINFORCING
3/4" = 1'-0"

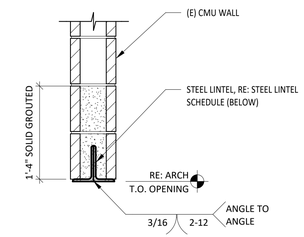

STEEL LINTEL SCHEDULE	
12" CMU WALL	
OPENING SIZE	LINTEL SIZE
0'-0" - 4'-0" MAX	(2) LLV5x5x5/16

7 LINTEL SECTION/SCHEDULE
1" = 1'-0"

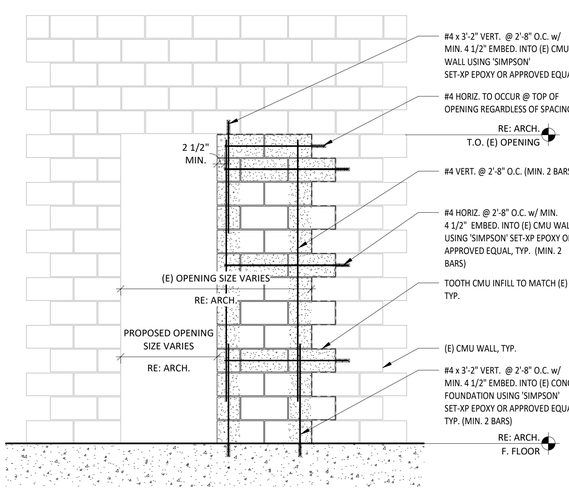

NOTE:
1. MASONRY VENEER MAY OCCUR (BUT IS NOT SHOWN FOR CLARITY), RE: ARCH.
2. HORIZ. BARS SHOULD BE CENTERED IN CMU BLOCK.
3. APPROVED SCREEN TUBES MAY BE USED WHEN EPOXYING INTO HOLLOW CMU.

8 PARTIAL CMU INFILL AT (E) CMU WALL
1/2" = 1'-0"

PROFESSIONAL ENGINEER
I hereby certify that this plan, specification, or report was prepared by me or under my direct supervision and that I am a duly Licensed Professional Engineer under the laws of the State of Minnesota.

Print Name Brian J. Sisloff
Signature:
Date 03/23/2020 License # 50112

TAMARACK GROVE ENGINEERING
812 S. La Cassia Drive
Boise, ID 83705
(208) 345-8941
fax (208) 345-8946
web www.tamarackgrove.com
firm Firm No. 812160000034

Project No: TGE20-14077
Checked By: DDH
Drawn By: DB

ARCHITECTS, INC.
17710 Detroit Avenue Lakewood, Ohio 44107
Phone (216) 521-5134 Fax (216) 521-4824
www.dodarchitects.cc

dogtopia

DOGTOPIA

MAPLEWOOD, MN 55109

2017 WOODLYNN AVENUE

This document ("Instrument of Service") was prepared by AIDA Architects, Inc. ("AIDA") specifically for the referenced project and is not intended for any other use. AIDA retains all copyrights, statutory and other reserved rights. Including copyrights. This Instrument of Service shall not be used on other projects, for additions to this project, or for completion of this project by others, unless AIDA is retained for such purposes and written consent is obtained by AIDA. The reuse of this Instrument of Service by User for a particular purpose, User's sole risk and without liability to AIDA. AIDA makes no warranties, express or implied, of merchantability or of fitness for a particular purpose.

FRANCHISEES
PAWS UP CAPITAL, LLC

REVISIONS

#	DATE	TYPE
1		
2		
3		
4		
5		

FRAMING DETAILS

DATE 03/23/20
JOB NO. 19492

S3.0
SHEET NO.

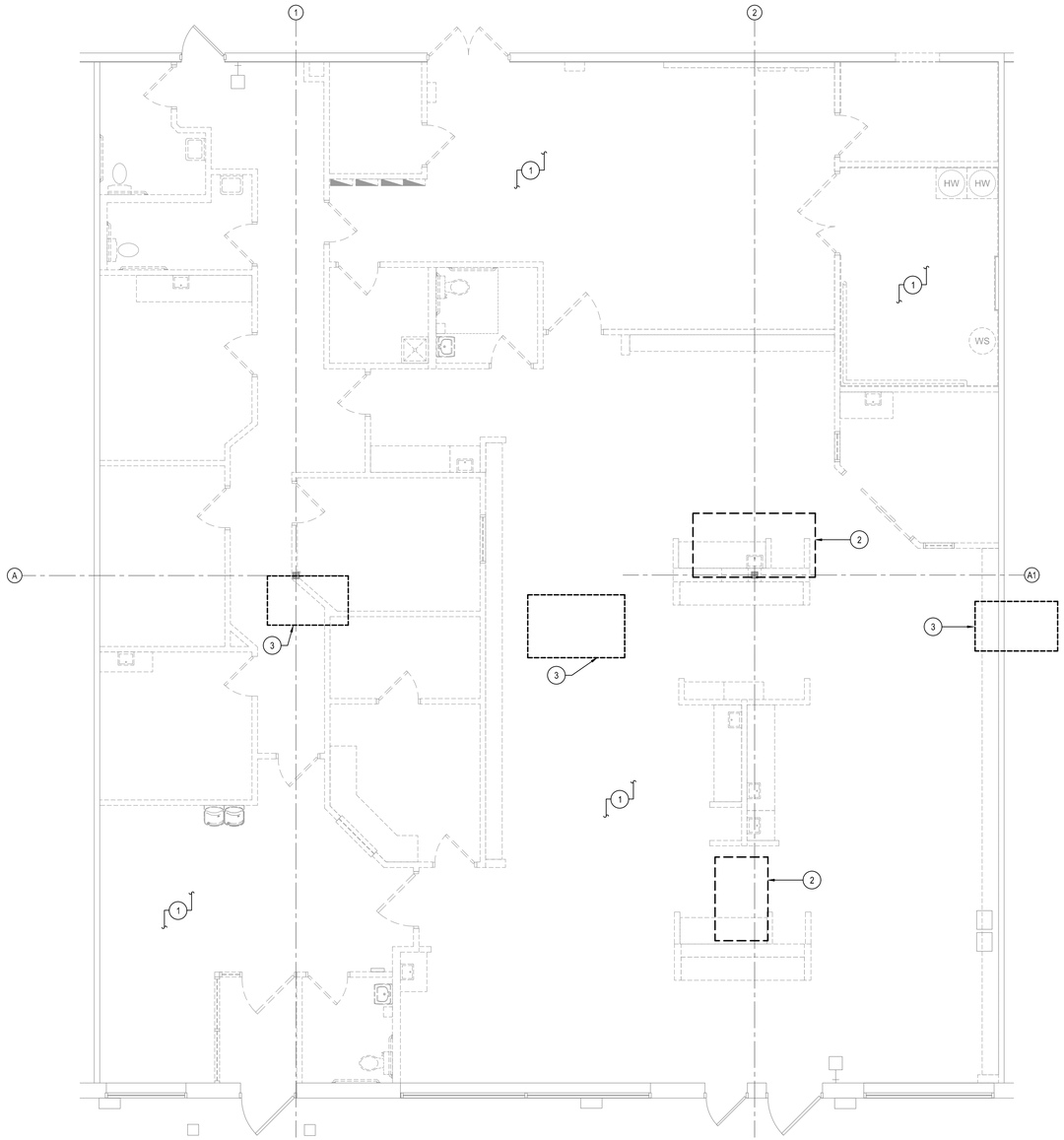

MECHANICAL DEMOLITION PLAN

SCALE 3/16" = 1'-0"

DEMO GENERAL NOTES:

A. EQUIPMENT AND DUCTWORK SHOWN DARK AND DASHED TO BE REMOVED. ANY EQUIPMENT AND DUCTWORK SHOWN LIGHTER AND SOLID TO REMAIN. REMOVE AND DISCARD ONLY THE HVAC EQUIPMENT AND DUCTWORK INDICATED. ALL OTHER HVAC EQUIPMENT AND DUCTWORK TO REMAIN AND BE REUSED.

B. MECHANICAL CONTRACTOR SHALL FIELD-VERIFY ALL MECHANICAL EQUIPMENT AND DUCTWORK PRIOR TO BID.

C. ALL EQUIPMENT AND DUCTWORK DISCARDED SHALL BE LEGALLY DISPOSED OF TO AN OFF-SITE LOCATION BY THIS CONTRACTOR.

D. ALL PATCHING OF ROOF SHALL BE BY LANDLORD ROOF CONTRACTOR TO MAINTAIN ANY AND ALL ROOF WARRANTIES. GENERAL CONTRACTOR TO CONTRACT WITH ROOF CONTRACTOR.

E. ALL DUCTWORK, INSULATION, EQUIPMENT AND PIPING SIZES ARE IN INCHES UNLESS NOTED OTHERWISE.

KEY NOTES:

1. REMOVE AND DISCARD ALL EXISTING HVAC SERVING DOGTOPIA SPACE, BOTH INSIDE AND OUTSIDE THE BUILDING, UNLESS NOTED OTHERWISE, INCLUDING DUCTWORK, EXHAUST FANS AND ALL ACCESSORIES. COORDINATE PATCHING OF BUILDING ENVELOPE WITH GENERAL CONTRACTOR AND LANDLORD ROOFING CONTRACTOR, AS REQUIRED.

2. APPROXIMATE LOCATION FOR NEW ROOF OPENING FOR NEW ROOFTOP UNIT. REFERENCE NEW PLAN, SHEET M1.1, AND ARCHITECTURAL AND STRUCTURAL PLANS FOR DETAILS ON NEW OPENING.

3. REMOVE & DISCARD EXISTING ROOFTOP UNIT AND ALL ASSOCIATED DUCTWORK, CONTROLS AND ACCESSORIES. PROVIDE INSULATED CURB CAP OVER ALL REMAINING ROOF OPENINGS.

FOR BIDDING PURPOSES ONLY - NOT FOR CONSTRUCTION

ARCHITECTS, INC.
17710 Detroit Avenue Lakewood, Ohio 44107
Phone (216) 521-5134 Fax (216) 521-4824
www.adaarchitects.cc

dogtopia

DOGTOPIA

MAPLEWOOD, MN 55109

2017 WOODLYNN AVENUE

This document ("Instrument of Service") was prepared by ADA Architects, Inc. ("ADA") specifically for the referenced project and is not intended for any other use. ADA retains all common law, statutory and other reserved rights, including copyrights. This Instrument of Service shall not be used on other projects, for additions to this project, or for completion of this project by others without ADA's prior written consent. Any unauthorized use of this Instrument of Service shall be at the User's sole risk and without liability to ADA. ADA makes no warranties, express or implied, of merchantability or of fitness for a particular purpose.

FRANCHISEE

LANG, BERT LLC

REVISIONS

#	DATE	TYPE
1		
2		
3		
4		
5		

MECHANICAL DEMOLITION PLAN

DATE 03/23/20

JOB NO. 19492/18W09

M1.0

SHEET NO.

Engineering Consultants Incorporated
303 Federal Way Boise, ID 83705
Phone: 208.376.9820 Fax: 208.376.9822
www.eciboise.com

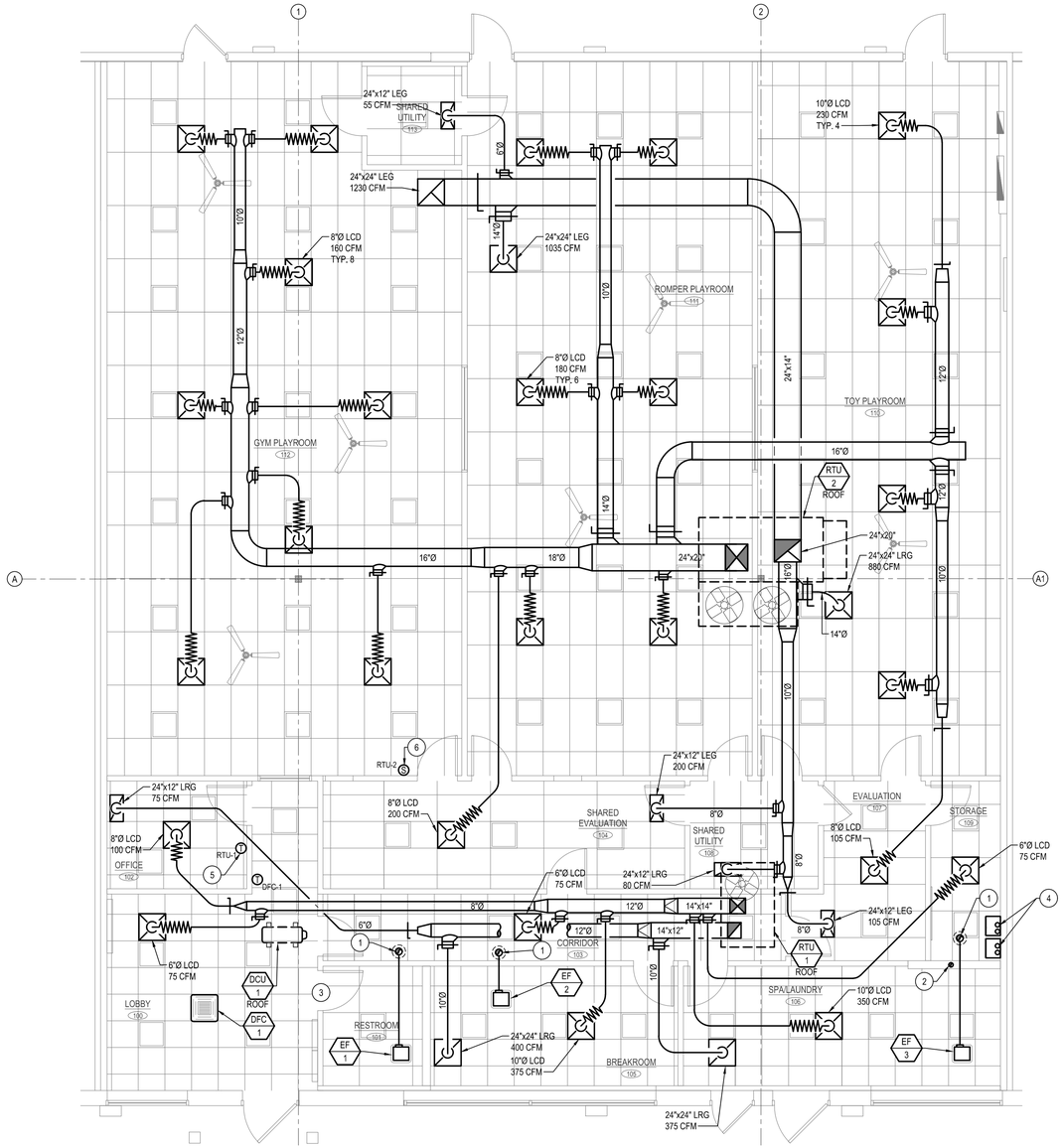

MECHANICAL NEW PLAN

SCALE 3/16" = 1'-0"

NEW GENERAL NOTES:

A. THE MECHANICAL CONTRACTOR IS RESPONSIBLE FOR VISITING THE SITE PRIOR TO SUBMITTING A BID FOR THE WORK ON THIS PROJECT. THE CONTRACTOR MUST BECOME FAMILIARIZED WITH THE FIELD CONDITIONS AND THE SCOPE OF WORK.

B. THE GENERAL CONTRACTOR (WHETHER WORKING FOR THE LANDLORD OR THE TENANT) SHALL FURNISH AND INSTALL A COMPLETE MECHANICAL SYSTEM TO INCLUDE, BUT NOT BE LIMITED TO: MECHANICAL EQUIPMENT, INSTALLED AND MOUNTED WITH DISCONNECT AND WIRING AND HANGERS (INCLUDING THE HIRING OF A LOCAL STRUCTURAL ENGINEER TO DESIGN SUCH HANGERS), DUCTWORK, COLLARS, DIFFUSERS, GRILLES, CONTROLS, TIME CLOCKS, ETC., WHETHER OR NOT SUCH WORK IS OR IS NOT SHOWN OR DELINEATED IN THE CONTRACT DOCUMENTS. GENERAL CONTRACTOR'S MECHANICAL CONTRACTOR(S) ARE REQUIRED TO COORDINATE WITH ALL OTHER CONTRACTORS ON JOB TO MAINTAIN TENANT'S CEILING HEIGHT, LIGHT FIXTURE LOCATION, SPRINKLER BRANCH LINES, ETC.

C. ALL ROOF PENETRATIONS SHALL BE COMPLETED IN ACCORDANCE WITH ROOFING SYSTEM REQUIREMENTS AND ROOF MANUFACTURER'S INSTRUCTIONS. GENERAL CONTRACTOR TO COORDINATE ALL WORK WITH LANDLORD'S ROOFING CONTRACTOR TO MAINTAIN ROOF WARRANTY.

D. SEE ELECTRICAL LIGHTING SHEETS FOR EXACT LOCATION OF ALL LIGHT FIXTURES. COORDINATE EXACT DIFFUSER AND GRILLE LOCATIONS WITH LIGHTING FIXTURES, AS REQUIRED.

E. INSTALL ALL DUCTWORK AS HIGH AS POSSIBLE WHILE COORDINATING WITH ALL OTHER TRADES. OFFSET AND TRANSITION DUCTWORK BETWEEN AND BENEATH STRUCTURAL MEMBERS, WHERE REQUIRED. DROP BRANCH DUCTS DOWN TO DIFFUSERS AND GRILLES.

F. BRANCH DUCTS TO SUPPLY DIFFUSERS SHALL BE THE SAME SIZE AS DIFFUSER INLET, UNLESS NOTED OTHERWISE.

G. ALL DUCTWORK SHALL MEET SMACNA'S "HVAC DUCT CONSTRUCTION STANDARDS - METAL AND FLEXIBLE", CURRENT EDITION. DUCT GAUGES, REINFORCEMENTS, METHODS OF CONNECTION, TRANSITIONS AND CONSTRUCTION WILL BE FIELD-VERIFIED, MEASURED AND INSPECTED FOR COMPLIANCE. DUCTWORK NOT MEETING SMACNA'S STANDARDS WILL BE REMOVED AND REPLACED AT CONTRACTOR'S EXPENSE. UNLESS OTHERWISE ADDRESSED IN THE SPECIFICATIONS, THE PRESSURE CLASSIFICATION FOR ALL DUCTWORK SHALL BE 2" WATER GAUGE POSITIVE OR NEGATIVE. CONTRACTOR SHALL VERIFY ALL REQUIREMENTS PRIOR TO SUBMITTALS OR DUCT FABRICATION AND GIVE WRITTEN DOCUMENTATION OF COMPLIANCE IN ORIGINAL PRODUCT SUBMITTALS.

H. ALL DIMENSIONS ARE LISTED IN INCHES UNLESS NOTED OTHERWISE. ALL DUCTWORK DIMENSIONS ARE INSIDE CLEAR.

I. HVAC CONTRACTOR SHALL FIELD-COORDINATE ALL CONDITIONS, UNIT LOCATIONS, OBSTRUCTIONS AND DUCTWORK INSTALLATION PRIOR TO DUCT FABRICATION. TRANSITION AND OFFSET DUCTWORK, AS REQUIRED, TO MAKE FIT IN CEILING SPACES AND FIELD CONDITIONS. DUCTWORK FABRICATED BY THE HVAC CONTRACTOR PRIOR TO FIELD COORDINATION AND CONFLICT RESOLUTION SHALL BE AT THE RESPONSIBILITY AND COST OF THE HVAC CONTRACTOR. OWNER SHALL NOT BE RESPONSIBLE FOR SHOP-FABRICATED DUCTWORK SIZED DIRECTLY FROM THE HVAC DRAWINGS.

J. DO NOT CUT, DRILL HOLES OR REMOVE ANY PORTION OF STRUCTURAL MEMBERS, BEAMS OR PURLINS. ROUTE ALL DUCTWORK, PIPING AND CONDUIT AROUND AND THROUGH STRUCTURAL MEMBERS AS REQUIRED. SEE STRUCTURAL DETAILS AND DRAWINGS FOR EXACT METHOD OF ATTACHING HANGERS TO BEAMS AND STRUCTURAL MEMBERS.

K. DO NOT ATTACH SCREWS, NAILS, HANGERS OR FASTENERS OF ANY TYPE TO ROOF DECK. SUPPORT ALL MECHANICAL EQUIPMENT FROM STRUCTURE AND CONTRACTOR-INSTALLED KICKERS ONLY. PROVIDE AND INSTALL INTERMEDIATE KICKERS BETWEEN PURLINS AS REQUIRED TO HANG EQUIPMENT AND SHEET METAL DUCTWORK.

L. ALL PLUMBING VENTS, EXHAUST OUTLETS AND GAS FLUES SHALL BE A MINIMUM OF 10'-0" FROM ANY AIR INTAKE INTO THE BUILDING, PER CODE.

M. ALL EQUIPMENT PLACEMENT SHALL COMPLY WITH THE MECHANICAL CODE LISTED IN THE BASIS OF DESIGN SCHEDULE.

N. MECHANICAL CONTRACTOR SHALL PROVIDE AND INSTALL PERMANENT ENGRAVED PLASTIC-LAMINATE SIGNS WITH MINIMUM 1"-TALL LETTERING AT ALL ROOFTOP UNITS, EXHAUST FANS AND HVAC EQUIPMENT LOCATIONS THROUGHOUT ENTIRE BUILDING AND ROOFTOP. MOUNT PERMANENTLY IN AN APPROPRIATE AND EFFECTIVE LOCATION, WITH UNIT DESIGNATION AND AREA SERVED SHOWN.

O. SUPPLY AND RETURN DUCTWORK FROM ROOFTOP UNITS TO BE INTERNALLY INSULATED A MINIMUM OF TEN FEET FOR SOUND ATTENUATION.

P. ALL BRANCH DUCTS OFF MAIN DUCT TO BE INSTALLED WITH 45° TIME-AND-A-HALF FITTING, RADIUS FITTING, OR SPIN-IN ONLY. NO STRAIGHT TAPS ALLOWED.

Q. ALL SUPPLY AIR DIFFUSER CONNECTIONS (POSITIVE PRESSURE) MAY USE A MAXIMUM OF SIX (6) FEET OF FLEXIBLE DUCT. ALL RETURN AND EXHAUST AIR GRILLE CONNECTIONS (NEGATIVE PRESSURE) SHALL BE SHEET METAL DUCT ONLY. NO FLEXIBLE DUCT IS ALLOWED ON NEGATIVE PRESSURE SYSTEMS. SEE "RETURN/EXHAUST DUCT DETAIL".

R. MOUNT THERMOSTATS AT 4'-6" AFF UNLESS NOTED OTHERWISE.

KEY NOTES:

1. 6"Ø EXHAUST UP TO SPUN ALUMINUM ROOF CAP. MAINTAIN 10-FEET FROM MECHANICAL FRESH AIR INTAKES.
2. 4"Ø DRYER VENT UP 6" WALL TO ROOF. TERMINATE WITH DRYER-JACK FLAT ROOF DRYER VENT MODEL 486U ON 12" ROOF CURB.
3. UNDERCUT DOOR 1" FOR RETURN AIR FLOW.
4. 2"Ø CPVC VENT AND 2"Ø PVC COMBUSTION AIR INTAKE FROM WATER HEATERS UP TO ROOF. TERMINATE WITH CONCENTRIC VENT KIT, TYP. 2. MAINTAIN 10-FEET FROM MECHANICAL INTAKES. INSTALL PER WATER HEATER MANUFACTURER'S REQUIREMENTS.
5. CONFIRM WITH FRANCHISEE THE DESIRED LOCATION FOR RTU-1 THERMOSTAT. OTHER ACCEPTABLE LOCATIONS ARE BREAKROOM OR SPA/LAUNDRY. PROVIDE LOCKING COVER OVER THERMOSTAT.
6. SPACE SENSOR AND SETPOINT ADJUSTMENT, PROVIDED BY OWNER AND INSTALLED BY CONTRACTOR.

Engineering Consultants Incorporated
303 Federal Way Boise, ID 83705
Phone: 208.376.9820 Fax: 208.376.9822
www.eciboise.com

FOR BIDDING PURPOSES ONLY - NOT FOR CONSTRUCTION

ARCHITECTS, INC.
17710 Detroit Avenue Lakewood, Ohio 44107
Phone (216) 521-5134 Fax (216) 521-4824
www.adaarchitects.cc

dogtopia

DOGTOPIA

MAPLEWOOD, MN 55109

2017 WOODLYNN AVENUE

This document ("Instrument of Service") was prepared by ADA Architects, Inc. ("ADA") specifically for the referenced project and is not intended for any other use. ADA retains all common law, statutory and other reserved rights, including copyrights. This Instrument of Service shall not be used on other projects, for additions to this project, or for completion of this project by others without ADA's prior written consent. Any unauthorized use of this Instrument of Service shall be at the User's sole risk and without liability to ADA. ADA makes no warranties, express or implied, of merchantability or of fitness for a particular purpose.

FRANCHISEE

LANG, BERT LLC

REVISIONS

#	DATE	TYPE
1		
2		
3		
4		
5		

MECHANICAL NEW PLAN

DATE 03/23/20

JOB NO. 19492/18W09

M1.1

SHEET NO.

HVAC SEQUENCES OF OPERATION

I. ROOFTOP UNIT, RTU-1

A. THE ROOFTOP UNIT SHALL BE A STANDARD PACKAGED GAS/ELECTRIC UNIT WITH DEHUMIDIFICATION CYCLE. UNIT SHALL OPERATE UNDER INDEPENDENT CONTROLS AND IS SCHEDULED FOR AUTOMATIC OPERATION ON A TIME-OF-DAY BASIS.

B. UNIT SHALL BE CONTROLLED BY A SEVEN-DAY PROGRAMMABLE THERMOSTAT AS LOCATED ON PLANS. OCCUPIED HOURS SHALL BE PROGRAMMED AT THE THERMOSTAT. CONSULT WITH OWNER'S REPRESENTATIVE FOR OCCUPIED HOURS.

C. HEATING, COOLING AND DEHUMIDIFICATION MODES SHALL RUN PER ROOFTOP UNIT INTERNAL CONTROLS SEQUENCING.

D. OCCUPIED MODE:

1) SUPPLY FAN SHALL OPERATE CONTINUOUSLY. OUTSIDE AIR DAMPER SHALL REMAIN OPEN AT PRESET MINIMUM POSITION AS SET BY BALANCING CONTRACTOR.

2) COOLING SETPOINT = 75°F
HEATING SETPOINT = 70°F
RELATIVE HUMIDITY SETPOINT = 50%
A 5°F DEADBAND SHALL BE MAINTAINED BETWEEN HEATING AND COOLING SETPOINTS.

E. UNOCCUPIED MODE:

1) SUPPLY FAN SHALL BE CYCLED ON DURING CALLS FOR HEATING OR COOLING.

2) COOLING UNOCCUPIED SET POINT = 80°
HEATING UNOCCUPIED SET POINT = 65°

3) THERMOSTAT SHALL AUTOMATICALLY SETBACK THE TEMPERATURE SETPOINTS PER THE ENERGY CODE. THERMOSTAT SHALL HAVE A MANUAL OVERRIDE THAT ALLOWS TEMPORARY OPERATION OF THE SYSTEM FOR UP TO 2 HOURS. THERMOSTAT SHALL HAVE BATTERY BACKUP TO COVER A MINIMUM OF 10 HOURS OF POWER LOSS.

4) OUTSIDE AIR DAMPER SHALL REMAIN CLOSED DURING ALL UNOCCUPIED HOURS.

F. CONTROLS SHALL BE CAPABLE OF AUTOMATICALLY ADJUSTING THE DAILY START TIME OF THE HVAC SYSTEM IN ORDER TO BRING EACH SPACE TO THE DESIRED OCCUPIED TEMPERATURE IMMEDIATELY PRIOR TO SCHEDULED OCCUPANCY.

G. COMPRESSOR SHALL BE DE-ENERGIZED UPON ACTIVATION OF THE INTERNAL CONDENSATE OVERFLOW SWITCH.

H. THE ROOFTOP UNIT SHALL AUTOMATICALLY RESET AFTER FIRE ALARM SHUTDOWN. RESET ACCOMPLISHED BY TERMINATING FIRE ALARM CONTACT AT APPROPRIATE TERMINAL ON UNIT CONTROLLER. SEE MANUFACTURER WIRING DIAGRAM FOR SPECIFIC TERMINAL. FIELD WIRING BY INSTALLING CONTRACTOR.

II. ROOFTOP UNIT, RTU-2

A. THE ROOFTOP UNIT SHALL BE A 100% OUTSIDE AIR UNIT. UNIT SHALL OPERATE UNDER INDEPENDENT CONTROLS AND IS SCHEDULED FOR AUTOMATIC OPERATION ON A TIME-OF-DAY BASIS.

B. OCCUPIED HOURS SHALL BE PROGRAMMED AT THE UNIT CONTROLLER. CONSULT WITH OWNER'S REPRESENTATIVE FOR OCCUPIED HOURS.

C. SPACE TEMPERATURE AND RELATIVE HUMIDITY TO BE MEASURED BY DUCT-MOUNTED SENSORS IN THE EXHAUST/RETURN AIR DUCT. SPACE SETPOINT ADJUSTMENTS SHALL BE BY A WALL-MOUNTED SENSOR AS SHOWN ON THE PLANS.

D. HEATING AND COOLING MODES AND ENERGY RECOVERY WHEEL SHALL RUN PER ROOFTOP UNIT INTERNAL CONTROLS SEQUENCING. HEATING AND COOLING MODES SHALL BE CONTROLLED BY A MINIMUM DISCHARGE AIR TEMPERATURE (DAT) RESET LOGIC.

E. OCCUPIED MODE:

1) SUPPLY FAN AND EXHAUST FAN SHALL OPERATE CONTINUOUSLY.

2) COOLING SPACE SETPOINT = 75°F
HEATING SPACE SETPOINT = 70°F
SPACE RELATIVE HUMIDITY SETPOINT = 50%
A 5°F DEADBAND SHALL BE MAINTAINED BETWEEN HEATING AND COOLING SETPOINTS.

F. UNOCCUPIED MODE:

1) SUPPLY FAN AND EXHAUST FAN SHALL BE OFF AND CYCLED ON ONLY WHEN MECHANICAL HEATING OR COOLING IS REQUIRED TO MAINTAIN SPACE SETPOINTS.

2) UNIT CONTROLLER SHALL AUTOMATICALLY SETBACK THE TEMPERATURE SETPOINTS PER THE ENERGY CODE. SPACE TEMPERATURE SENSORS SHALL HAVE A MANUAL OVERRIDE THAT ALLOWS TEMPORARY OPERATION OF THE SYSTEM FOR UP TO 2 HOURS.

3) COOLING SPACE SETPOINT = 80°F
HEATING SPACE SETPOINT = 60°F
A 5°F DEADBAND SHALL BE MAINTAINED BETWEEN HEATING AND COOLING SETPOINTS.

G. CONTROLS SHALL BE CAPABLE OF AUTOMATICALLY ADJUSTING THE DAILY START TIME OF THE HVAC SYSTEM IN ORDER TO BRING EACH SPACE TO THE DESIRED OCCUPIED TEMPERATURE IMMEDIATELY PRIOR TO SCHEDULED OCCUPANCY.

H. COMPRESSOR SHALL BE DE-ENERGIZED UPON ACTIVATION OF THE INTERNAL CONDENSATE OVERFLOW SWITCH.

I. THE ROOFTOP UNIT SHALL AUTOMATICALLY RESET AFTER FIRE ALARM SHUTDOWN. RESET ACCOMPLISHED BY TERMINATING FIRE ALARM CONTACT AT APPROPRIATE TERMINAL ON UNIT CONTROLLER. SEE MANUFACTURER WIRING DIAGRAM FOR SPECIFIC TERMINAL. FIELD WIRING BY INSTALLING CONTRACTOR.

III. EXHAUST FANS

A. SEE EXHAUST FAN SCHEDULE FOR CONTROL INFORMATION.

END OF HVAC SEQUENCES OF OPERATION

MAINTENANCE CONTRACT REQUIREMENTS

CONTRACTOR TO PROVIDE SERVICE FOR ALL HVAC UNITS FOR ONE YEAR POST-CERTIFICATE OF OCCUPANCY. THIS INCLUDES BUT IS NOT LIMITED TO:

AT MONTHS 2, 4, 6, 8, 10, AND 12:

TEST AND INSPECT:
* TESTING FOR EXCESSIVE VIBRATION; MOTOR WINDING RESISTANCE; REFRIGERANT CHARGE; FAN RPM; REFRIGERANT OIL (ACID); WATER CONDITION; SAFETY CONTROLS, CRANKCASE HEATERS, CONTROL SYSTEM(S), ETC.
* INSPECTING FOR WORN, FAILED OR DOUBTFUL PARTS; MOUNTINGS, DRIVE COUPLINGS; OIL LEVEL; ROTATION; SOOT; FLAME COMPOSITION AND SHAPE; PILOT AND IGNITER; STEAM, WATER, OIL AND/OR REFRIGERANT LEAKS, ETC. REPLACE AS NEEDED.

PREVENTIVE MAINTENANCE: CLEAN, ALIGN, CALIBRATE, TIGHTEN, ADJUST, LUBRICATE.
* CLEANING COIL SURFACES; FAN IMPELLERS AND BLADES; HEAT EXCHANGE WHEELS; ELECTRICAL CONTACTS; BURNER ORIFICES; PASSAGES AND NOZZLES; PILOT AND IGNITER; COOLING TOWER BAFFLES, BASIN, SUMP AND FLOAT; CHILLER, CONDENSER AND BOILER TUBES, ETC.
* ALIGNING BELT DRIVES; DRIVE COUPLINGS; COIL FINS, ETC.
* CALIBRATING SAFETY CONTROLS; TEMPERATURE AND PRESSURE CONTROLS, ETC.
* TIGHTENING ELECTRICAL CONNECTION; MOUNTING BOLTS; PIPE CLAMPS; REFRIGERANT PIPING FITTINGS; DAMPER SECTIONS, ECT.
* FILTERS REPLACE ALL FILTERS INCLUDING THOSE FOR RTUS, ERVS, ETC.
* ADJUSTING BELT TENSION; REFRIGERANT CHARGE; SUPER HEAT; FAN RPM; WATER CHEMICAL FEED AND FEED RATE; BURNERFUEL/AIR RATIOS; GAS PRESSURE; SET POINT OF CONTROLS AND LIMITS; COMPRESSOR CYLINDER UNLOADERS; DAMPER CLOSE- OFF; SUMP FLOATS, ETC.
* LUBRICATING MOTORS; FAN AND DAMPER BEARINGS; VALVE STEMS; DAMPER LINKAGES; FAN VANE LINKAGES, ETC.
* PROVIDE ALL OTHER MAINTENANCE RECOMMENDED BY THE MANUFACTURER.

AT MONTH 12 REPLACE THE LAMPS IN ALL STERIL-AIRE UVC EMITTERS.

OWNER-PROVIDED ROOFTOP UNIT SCHEDULE

SYMBOL	SERVES	TYPE	NOMINAL TONS	SUPPLY FAN			EXHAUST FAN			OA CFM	ELECTRICAL			HEATING (2)					COOLING (3)						EFFICIENCY		MANUFACTURER & MODEL	UNIT WEIGHT (LBS)	REMARKS
				CFM	ESP (IN. W.C.)	HP	CFM	ESP (IN. W.C.)	HP		V/PH	MCA	MOCP	TYPE	STAGES	INPUT (MBH)	OUTPUT (MBH)	STEADY STATE EFFICIENCY	GROSS CAPACITY	EAT		COIL CAPACITY		MAX. COIL LAT	EER	SEER			
																				DB	WB	TOTAL	SENSIBLE						
RTU 1	LOBBY, OFFICE, BREAKROOM, SPA/LAUNDRY	PACKAGED GAS/ELECTRIC ROOFTOP UNIT WITH DEHUMIDIFICATION	3	1,050	0.80"	1/2	-	-	-	200	208/3	16	20	NAT. GAS	1	80	64.8	81%	34.2 MBH	78.0°F	64.4°F	34.2 MBH	25.4 MBH	55.4°F DB	-	14	DAIKIN MPSA03C	543	(1)(5)(6)
RTU 2	GYM, ROMPER, & TOY DOG AREAS	100% OUTSIDE AIR PACKAGED ROOFTOP UNIT W/ ERV WHEEL	-	3,585	0.75"	4	3,585	0.75"	4	3,585	208/3	59.9	70	NAT. GAS	MOD. 5:1	200	160	80%	240.9 MBH	80.5°F	66.9°F	150.1 MBH	107.2 MBH	53.2°F DB	11.4	-	DAIKIN DPS012A	2,635	(1)(4)(6)

1) DAIKIN ROOFTOP UNITS ARE PURCHASED THROUGH A DAIKIN NATIONAL ACCOUNT. SEE RESPONSIBILITY MATRIX, THIS SHEET, FOR FURTHER INFORMATION.

2) HEATING INPUT MBH IS NOMINAL AT SEA LEVEL CONDITIONS. HEATING OUTPUT MBH IS AT DESIGN CONDITIONS AND ELEVATION.

3) CAPACITY AND ENTERING AIR CONDITIONS BASED ON AMBIENT AND INDOOR TEMPERATURES & ELEVATION LISTED IN BASIS OF DESIGN SCHEDULE. GROSS CAPACITY INCLUDES RECOVERED CAPACITY FROM THE ENERGY RECOVERY WHEEL (IF APPLICABLE). ENTERING AIR CONDITIONS ARE FOR THE COOLING COIL AND INCLUDE ENERGY RECOVERY (IF APPLICABLE).

4) 100% OA UNIT, PROVIDED WITH:
- FACTORY-INSTALLED NON-FUSED DISCONNECT
- FACTORY-INSTALLED POWERED CONVENIENCE OUTLET
- 2" MERV-8 PRE-FILTERS IN SUPPLY & EXHAUST AIRSTREAMS
- ROOF CURB
- MODULATING HOT GAS REHEAT
- SENSORS AND CONTROLS AS DESCRIBED IN HVAC SEQUENCE OF OPERATIONS
- DAIKIN INTELLIGENT EQUIPMENT REMOTE MONITORING SYSTEM, FACTORY-INSTALLED WITH 1ST YEAR CELLULAR SUBSCRIPTION

5) PROVIDED WITH:
- FACTORY-INSTALLED NON-FUSED DISCONNECT
- FIELD-POWERED CONVENIENCE OUTLET
- 2" THROWAWAY FILTERS
- ROOF CURB
- HOT GAS REHEAT WITH FIELD-INSTALLED RETURN DUCT-MOUNTED HUMIDITY SENSOR
- MOTORIZED OUTSIDE AIR DAMPER CAPABLE OF CLOSING DURING UNOCCUPIED MODE
- SEVEN-DAY PROGRAMMABLE TOUCHSCREEN THERMOSTAT

6) CONTRACTOR TO PROVIDE AND INSTALL STERIL-AIRE ULTRAVIOLET (UV) GERMICIDAL LAMP, SEE M3.0 FOR ORDERING AND INSTALLATION INFORMATION. LAMP TO BE POWERED BY SEPARATE CIRCUIT PROVIDED BY ELECTRICAL CONTRACTOR.

AIR BALANCE SCHEDULE

TAG	AREA SERVED	OA (CFM)	EXHAUST (CFM)	COMMENTS
EF-1	RESTROOM		75	INTERMITTENT
EF-2	BREAKROOM		75	INTERMITTENT
EF-3	SPA & LAUNDRY		75	INTERMITTENT
RTU-1	LOBBY, OFFICE, BREAKROOM, SPA/LAUNDRY	200		
RTU-1	DOG PLAY AREAS	3,585	3,585	
	TOTAL	3,785	3,810	BLDG. PRESSURE OF -25 TO +200 CFM

EXHAUST FAN SCHEDULE

SYMBOL	SERVES	TYPE	CFM	ESP	ELECTRICAL		RPM	SONES	CONTROL	MANUFACTURER & MODEL	REMARKS
					V/PH	HP/W					
EF 1	RESTROOM	DIRECT DRIVE CEILING	75	0.10"	115/1	15 W	853	0.4	LIGHTS	GREENHECK SP-B80	(1)
EF 2	BREAKROOM	DIRECT DRIVE CEILING	75	0.10"	115/1	15 W	853	0.4	SWITCH	GREENHECK SP-B80	(1)
EF 3	SPA/LAUNDRY	DIRECT DRIVE CEILING	75	0.10"	115/1	15 W	853	0.4	LIGHTS	GREENHECK SP-B80	(1)

1) PROVIDE WITH SOLID STATE SPEED CONTROLLER MOUNTED ON FAN HOUSING, 12" ROOF CURB AND SPUN ALUMINUM CURB-MOUNTED ROOF CAP

2) PROVIDE WITH BACKDRAFT DAMPER, SPEED CONTROLLER MOUNTED ON FAN HOUSING, 12" ROOF CURB AND DISCONNECT SWITCH

GRILLE, REGISTER AND DIFFUSER SCHEDULE

SYMBOL	DESCRIPTION	MANUFACTURER & MODEL	FEATURES AND OPTIONS
LCD	SQUARE PLAQUE CEILING DIFFUSER, 4-WAY AIRFLOW, ROUND NECK, LAY-IN	PRICE SPD	24"x24" TYPE 31 FRAME FOR LAY-IN CEILING, DISCHARGE PATTERN 4W FOR 4-WAY THROW, WITH ROUND NECK SIZE AS SHOWN ON PLANS. FACTORY WHITE FINISH.
LCD2	SQUARE PLAQUE CEILING DIFFUSER, 2-WAY AIRFLOW, ROUND NECK, LAY-IN	PRICE SPD	24"x24" TYPE 31 FRAME FOR LAY-IN CEILING, DISCHARGE PATTERN 2W SQUARE FOR TWO-WAY THROW, WITH ROUND NECK SIZE AS SHOWN ON PLANS. FACTORY WHITE FINISH.
LRG	LAY-IN CEILING EGGCRATE RETURN AIR GRILLE	PRICE 80	ALUMINUM CONSTRUCTION, 24"x24" OR 24"x12" TYPE TB BORDER FOR LAY-IN CEILING (NOT PANEL MOUNT), AS SHOWN ON PLANS. FACTORY WHITE FINISH.
LEG	LAY-IN CEILING EGGCRATE EXHAUST GRILLE	PRICE 80	ALUMINUM CONSTRUCTION, TYPE 3PA 24"x24" OR 24"x12" PANEL FOR LAY-IN CEILING, AS SHOWN ON PLANS, WITH 20"x20" OR 20"x8" CORE, RESPECTIVELY. FACTORY WHITE FINISH.

DUCTLESS SPLIT SYSTEM SCHEDULE

INDOOR UNIT TAG	OUTDOOR UNIT TAG	SERVES	TYPE	NOMINAL TONS	MAX. CFM	COOLING CAPACITY (1)	HEATING CAPACITY (2)	MIN. HEATING OPERATING TEMPERATURE	ELECTRICAL			EFFICIENCY		MANUFACTURER & MODEL	REMARKS
									V/PH	MCA	MOCP	SEER	HSPF		
DFC 1	DCU 1	LOBBY	CEILING CASSETTE UNIT, LOW AMBIENT HEAT PUMP	1	380	12.0	12.0	-22°F	208-230/1	9	15	19	10	LENNOX; INDOOR MODEL M22A012S4-2P, OUTDOOR MODEL MLA012S4S-2P	(3)(4)(6)

1) RATED COOLING CAPACITY, IN MBH, BASED ON 80°F DB/67°F WB INDOOR CONDITIONS AND 95°F AMBIENT.

2) RATED HEATING CAPACITY, IN MBH, BASED ON 70°F DB/60°F WB INDOOR CONDITIONS AND 47°F AMBIENT.

3) PROVIDE UNIT WITH R-410A REFRIGERANT. MECHANICAL CONTRACTOR SHALL PROVIDE AND INSTALL R-410A REFRIGERANT LINE KITS, SIZED AND INSTALLED PER MANUFACTURER'S RECOMMENDATIONS.

4) PROVIDE WITH DISCONNECT SWITCH, CONDENSER PAD, WIRED PROGRAMMABLE CONTROLLER, MOUNTING BRACKETS AND ALL ADDITIONAL EQUIPMENT AND ACCESSORIES REQUIRED FOR INSTALLATION PER MANUFACTURER'S INSTRUCTIONS

5) PROVIDE WITH DISCONNECT SWITCH, CONDENSER PAD, WIRED PROGRAMMABLE CONTROLLER, 120V BELOW-UNIT CONDENSATE PUMP (REFCO MODEL GOBI OR EQUAL), MOUNTING BRACKETS AND ALL ADDITIONAL EQUIPMENT AND ACCESSORIES REQUIRED FOR INSTALLATION PER MANUFACTURER'S INSTRUCTIONS

6) MECHANICAL CONTRACTOR TO PROVIDE AND INSTALL STERIL-AIRE ULTRAVIOLET (UV) GERMICIDAL LAMP AT DISCHARGE SIDE OF COOLING COIL, SEE M3.0 FOR ORDERING AND INSTALLATION INFORMATION. LAMP TO BE POWERED BY SEPARATE FEED PROVIDED BY ELECTRICAL CONTRACTOR.

DUCT INSULATION SPECIFICATIONS

DUCT TYPE	DUCT LOCATION	INSULATION R-VALUE
SUPPLY, RETURN	EXTERIOR OF BUILDING	R-12
	INSIDE BUILDING, EXPOSED IN CONDITIONED SPACE	R-4.2 (1)
	INSIDE BUILDING, UNCONDITIONED SPACE (INCLUDING ABOVE CEILING)	R-6
OUTSIDE AIR	INSIDE BUILDING	R-6
EXHAUST	UPSTREAM OF ENERGY RECOVERY DEVICE	R-6
	DOWNSTREAM OF BACKDRAFT DAMPER	R-4.2
	OTHER	NONE

SPECIFICATION NOTES: (5I5A)
(1) EXPOSED SUPPLY AND RETURN DUCTWORK LOCATED IN CONDITIONED SPACES SHALL NOT BE EXTERNALLY INSULATED.

GENERAL NOTES:
1. REQUIREMENTS APPLY TO THE DUCT TYPE LISTED WHETHER HEATED OR MECHANICALLY-COOLED. MECHANICALLY-COOLED DUCTS REQUIRING INSULATION SHALL HAVE A VAPOR-RETARDER WITH A PERM RATING NOT GREATER THAN 0.5 AND ALL JOINTS SEALED.
2. LISTED R-VALUES ARE FOR THE INSULATION AS INSTALLED AND DO NOT INCLUDE AIR FILM RESISTANCE.
3. ALL REQUIREMENTS LISTED HERE SUPERSEDE AND OVERRIDE ALL REQUIREMENTS LISTED IN SPECIFICATIONS.
4. SUPPLY AND RETURN DUCTWORK TO BE INTERNALLY-LINED FOR A MINIMUM OF TEN FEET FROM ROOFTOP UNITS FOR SOUND ATTENUATION.
5. DUCT LINER SHALL NOT BE UTILIZED TO ACHIEVE SCHEDULED INSULATION R-VALUE, EXCEPT FOR EXPOSED DUCTS IN CONDITIONED SPACES, WITHOUT PRIOR APPROVAL FROM THE ENGINEER ON RECORD.

HVAC RESPONSIBILITY MATRIX

CONTRACTOR RESPONSIBILITY	DAIKIN NATIONAL ACCOUNT RESPONSIBILITES
CONTACT DAIKIN WITHIN TWO WEEKS OF CONSTRUCTION START TO VERIFY SHIPPING ADDRESS. RECEIVE DAIKIN ROOFTOP UNITS.	SCHEDULE DELIVERY DATES WITH CONTRACTOR
INSTALLATION OF DAIKIN ROOFTOP UNITS	PROVIDE IOMs AND INSTALLATION GUIDANCE
PROVIDE AND INSTALL STERIL-AIRE UV LIGHTS	-
COMPLETE PRE-START-UP CHECKLIST	PROVIDE CHECKLIST TO INSTALLING CONTRACTOR
SCHEDULE ROOFTOP UNIT START-UP DATE	PROVIDE START-UP* (*MODEL DPS- UNITS ONLY)
CARRY ONE YEAR LABOR WARRANTY & MAINTENANCE CONTRACT PER "MAINTENANCE CONTRACT REQUIREMENTS", THIS SHEET	CARRY THREE YEAR PARTS WARRANTY

DAIKIN NATIONAL ACCOUNT CONTACTS:
GEOFF CORNWELL OR MIKE PEREZ WITH NORBRYHN EQUIPMENT COMPANY (NEC)
208-465-5700
GEOFF@NORBRYHN.COM

HVAC SYMBOLS & ABBREVIATIONS

(D)	DEMO
(E)	EXISTING TO REMAIN
(N)	NEW
SA	SUPPLY AIR
RA	RETURN AIR
EA	EXHAUST AIR
OA	OUTSIDE (VENTILATION) AIR
TA	TRANSFER AIR
ESP	EXTERNAL STATIC PRESSURE
EAT	ENTERING AIR TEMPERATURE
LAT	LEAVING AIR TEMPERATURE
AFF	ABOVE FINISHED FLOOR
BDD	BACKDRAFT DAMPER
MD	MANUAL (VOLUME) DAMPER
U.N.O.	UNLESS NOTED OTHERWISE

SUPPLY AIR RISER

RETURN AIR RISER

EXHAUST AIR RISER

FLEXIBLE DUCT (6'-0" MAX)

45° BOOT FITTING W/ MANUAL VOLUME DAMPER.

MANUAL VOLUME DAMPER

SQUARE-TO-ROUND TRANSITION

4-WAY SUPPLY DIFFUSER

2-WAY SUPPLY DIFFUSER

RETURN GRILLE

EXHAUST GRILLE

THERMOSTAT

SENSOR

EQUIPMENT TAG
NEW AHU 1 ROOF
PHASE
EQUIPMENT TYPE
EQUIPMENT TAG NUMBER
LOCATION

BASIS OF DESIGN

CODES:
2012 INTERNATIONAL MECHANICAL CODE (IMC)
2015 MINNESOTA STATE ENERGY CODE
CLIMATE ZONE 6A

DESIGN TEMPERATURES:
SUMMER: 90.6°F DB / 73.8°F WB (OUTDOORS-COOLING)
83.5°F DB / 74.4°F DP (OUTDOORS-DEHUMIDIFICATION)
75°F DB / 50% RH (INDOORS)
WINTER: -10.0°F DB (OUTDOORS)
70°F DB (INDOORS)

ELEVATION: 700 FEET ABOVE SEA LEVEL

Engineering Consultants Incorporated
303 Federal Way Boise, ID 83705
Phone: 208.376.9820 Fax: 208.376.9822
www.eciboise.com

FOR BIDDING PURPOSES ONLY - NOT FOR CONSTRUCTION

ADA ARCHITECTS, INC.
17710 Detroit Avenue Lakewood, Ohio 44107
Phone (216) 521-5134 Fax (216) 521-4824
www.adaarchitects.cc

dogtopia

DOGTOPIA

MAPLEWOOD, MN 55109

2017 WOODLYNN AVENUE

This document ("Instrument of Service") was prepared by ADA Architects, Inc. ("ADA") specifically for the referenced project and is not intended for any other use. ADA retains all common law, statutory and other reserved rights, including copyrights. This Instrument of Service shall not be used on other projects, for additions to this project or for completion of this project by others without ADA's prior written consent. Any unauthorized use of this Instrument of Service shall be at the User's sole risk and without liability to ADA. ADA makes no warranties, express or implied, of merchantability or of fitness for a particular purpose.

FRANCHISEE
LANG, BERT LLC

REVISIONS

#	DATE	TYPE
1		
2		
3		
4		
5		

MECHANICAL SCHEDULES

DATE 03/23/20

JOB NO. 19492/18W09

M2.0
SHEET NO.

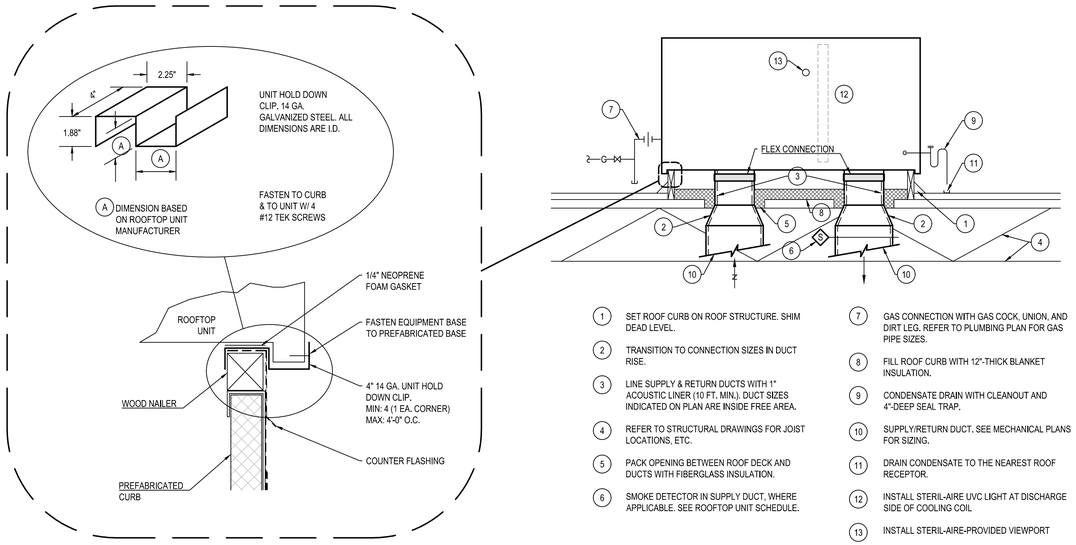

1. SET ROOF CURB ON ROOF STRUCTURE. SHIM DEAD LEVEL.
2. TRANSITION TO CONNECTION SIZES IN DUCT RISE.
3. LINE SUPPLY & RETURN DUCTS WITH 1" ACOUSTIC LINER (10 FT. MIN.). DUCT SIZES INDICATED ON PLAN ARE INSIDE FREE AREA.
4. REFER TO STRUCTURAL DRAWINGS FOR JOIST LOCATIONS, ETC.
5. PACK OPENING BETWEEN ROOF DECK AND DUCTS WITH FIBERGLASS INSULATION.
6. SMOKE DETECTOR IN SUPPLY DUCT, WHERE APPLICABLE. SEE ROOFTOP UNIT SCHEDULE.
7. GAS CONNECTION WITH GAS COCK, UNION, AND DIRT LEG. REFER TO PLUMBING PLAN FOR GAS PIPE SIZES.
8. FILL ROOF CURB WITH 12"-THICK BLANKET INSULATION.
9. CONDENSATE DRAIN WITH CLEANOUT AND 4"-DEEP SEAL TRAP.
10. SUPPLY/RETURN DUCT. SEE MECHANICAL PLANS FOR SIZING.
11. DRAIN CONDENSATE TO THE NEAREST ROOF RECEPTOR.
12. INSTALL STERIL-AIRE UVC LIGHT AT DISCHARGE SIDE OF COOLING COIL
13. INSTALL STERIL-AIRE-PROVIDED VIEWPORT

1 / M3.0 ROOFTOP UNIT DETAIL

SCALE: N.T.S.

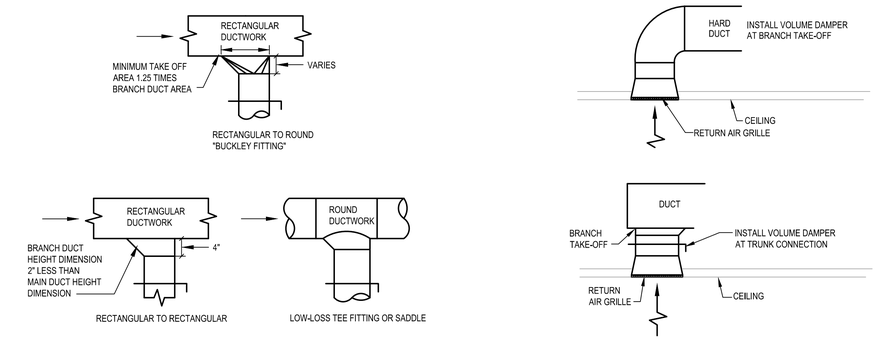

2 / M3.0 DUCT BRANCH TAKE-OFF DETAIL

SCALE: N.T.S.

3 / M3.0 RETURN/EXHAUST DUCT DETAIL

SCALE: N.T.S.

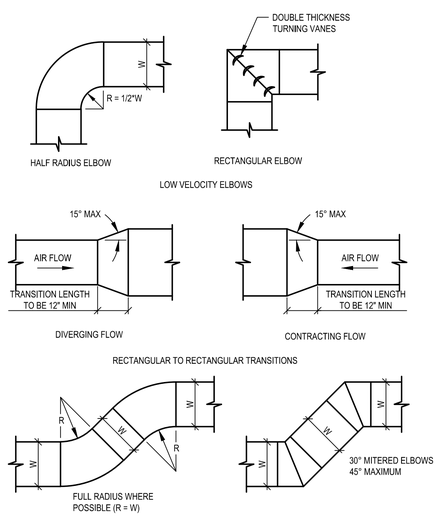

4 / M3.0 DUCT TRANSITIONS AND OFFSETS DETAIL

SCALE: N.T.S.

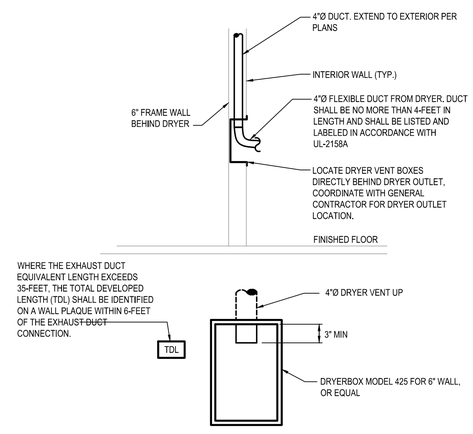

5 / M3.0 DRYER BOX DETAIL

SCALE: NONE

NOTES:

1) DRYER DUCT SHALL BE METAL OF AT LEAST 0.016" THICKNESS AND HAVE A SMOOTH INTERIOR FINISH. INSTALLATION SHALL CONFORM WITH IMC SECTION 504.8.2.
2) PROTECTIVE SHIELD PLATES SHALL BE PLACED ON THE FINISHED FACE OF ALL FRAMING MEMBERS WHERE THERE IS LESS THAN 1-1/4" BETWEEN THE DUCT AND FRAMING MEMBER. PLATES SHALL CONFORM WITH IMC SECTION 504.7.

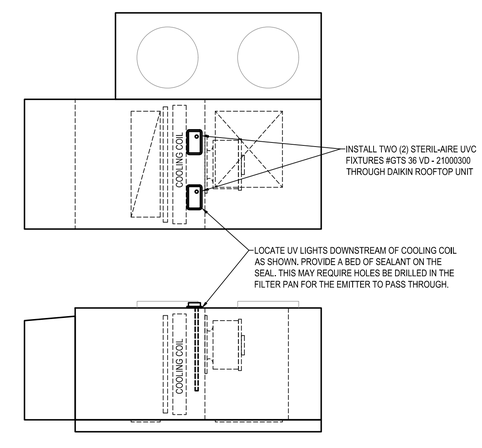

6 / M3.0 DAIKIN REBEL UV LIGHT INSTALLATION DETAIL

SCALE: N.T.S.

Engineering Consultants Incorporated
303 Federal Way Boise, ID 83705
Phone: 208.376.9820 Fax: 208.376.9822
www.eciboise.com

FOR BIDDING PURPOSES ONLY - NOT FOR CONSTRUCTION

ADA ARCHITECTS, INC.
17710 Detroit Avenue Lakewood, Ohio 44107
Phone (216) 521-5134 Fax (216) 521-4824
www.adaarchitects.cc

dogtopia

DOGTOPIA

MAPLEWOOD, MN 55109

2017 WOODLYNN AVENUE

This document ("Instrument of Service") was prepared by ADA Architects, Inc. ("ADA") specifically for the referenced project and is not intended for any other use. ADA retains all common law, statutory and other reserved rights, including copyrights. This Instrument of Service shall not be used on other projects, for additions to this project or for completion of this project by others without ADA's prior written consent. Any unauthorized use of this Instrument of Service shall be at the User's sole risk and without liability to ADA. ADA makes no warranties, express or implied, of merchantability or of fitness for a particular purpose.

FRANCHISEE

LANG, BERT LLC

REVISIONS

#	DATE	TYPE
1		
2		
3		
4		
5		

MECHANICAL DETAILS

DATE 03/23/20

JOB NO. 19492/18W09

M3.0

SHEET NO.

STERIL-AIRE®

UVC *for* HVAC™

Model SEN Series UVC Emitters™

Single-Ended, NEMA 4X
Very High Output Germicidal
UVC for Outdoor A/C Units

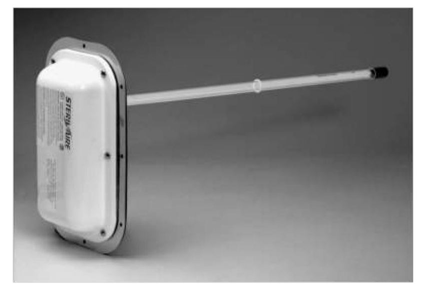

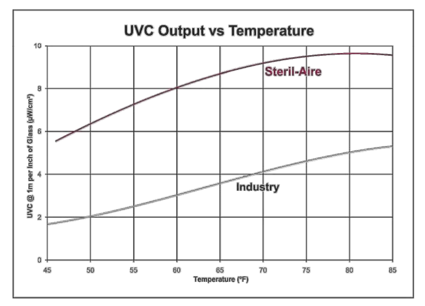

Steril-Aire's multi-patented UVC Emitter™ provides the best and longest-lasting UVC performance available. As shown in the comparison graph *(above)*, it has been independently tested to deliver an average of 6 times the output of other ultraviolet devices under HVAC operating conditions (50° F @ 400 fpm air velocity).

Competitive UVC lights must be changed every 3-4 months because they quickly lose the output or "killing power" needed to maintain microbial control. The UVC Emitter, by contrast, has a 12-month service life – and even after a full year, it has 3 times greater output than competitive devices deliver on Day 1! As a result, only Steril-Aire can ensure the germicidal performance you need.

Applications

Steril-Aire Single-Ended NEMA 4X (SEN Series) fixtures combine the externally mounted design of the SE Series with a weather resistant NEMA 4X fixture. Installed from the exterior of rooftop A/C units or ductwork, they provide ideal solutions for rooftop AHUs. By creating two 1" holes in the equipment wall and mounting the fixture, the Emitter may be installed vertically or horizontally. Only the Emitter penetrates into the system, while the power supply remains external. The SEN Series is available in seven lengths (12", 16", 20", 24", 30", 36" and 42") with a 120-277 V power supply.

Benefits

- Reduces HVAC energy costs by restoring heat transfer and net cooling capacity.
- Uses germicidal UVC irradiation proven as an effective inactivation method for mold, bacteria and viruses.
- Eliminates costly cleaning programs and the use of harmful chemicals and disinfectants by continuously cleaning coils, drain pans, plenums and ducts.
- Delivers up to 6 times the output of competitive UVC products at HVAC operating temperatures, for longer life and more reliable germicidal control.
- Offers lowest life-cycle cost of any UVC product. Return on investment is often less than one year.
- Uses patented state-of-the-art solid-state electronic power supply for enhanced reliability and performance.
- Produces no ozone or other secondary contaminants.
- Installs quickly and easily – ideal for small outdoor systems.
- Improves Indoor Air Quality (IAQ).

Model SEN Specifications

The UVC Emitter™ and fixture shall be factory assembled and tested. They shall consist of a fixture, power supply, Emitter socket and Emitter.

The fixture shall be constructed of 304 stainless steel and shall be powder coated to withstand the elements and HVAC environments. Housing shall be equipped with a bottom side electrical opening to facilitate wiring fixture to unit power. It shall incorporate all components into one integral assembly that maximizes integrity and serviceability. It shall be designed for mounting from outside the airstream with only the Emitter in the conditioned air. Emitter shall be held in place and supported in the airstream by a patented integral collar, o-ring and heavy-duty spring wire fastener. The patented tube mount section shall allow for quick and easy removal during lamp replace - ment. The housing shall include an on-off switch.

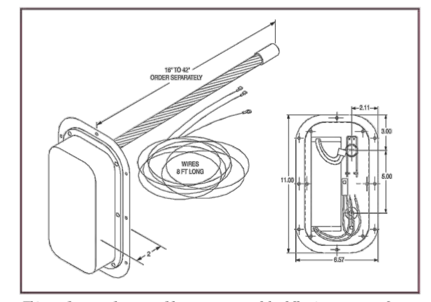

This product may be covered by one or more of the following patents, others pending: 5,334,347 / 5,817,276 / 5,866,076 / 6,245,293 / 6,267,924 / 6,280,686 / 6,313,470 / 6,372,186 / 6,423,882 / 6,500,267 / 6,589,476 / 6,627,000 / 6,997,578 / 7,140,749 / 7,282,728 / 7,459,694.

The power supply shall be a Class P2, electronic rapid start type with a power factor of >0.98 and a power conversion of >90%. It shall be available in 120-277 V, 50/60 Hertz, single phase. It shall be designed to maximize photon production, irradiance and reliability in cold airstreams of 0-140° F, 100% RH. The design shall include RF and EMI suppression.

The socket shall be a Circline® 4 pin type with sufficient wire length to facilitate service.

The Emitter shall be a very high output, hot cathode, T5 diameter, Circline® cell-base type that produces a germicidal UVC band of 253.7 nm. The Emitter shall operate in air velocities of up to 2000 fpm and air temperatures of 35-140° F. It shall produce no ozone or other secondary contaminants.

Independent testing: The unit shall be tested by an independent test laboratory and shall be verified to provide output per 1" arc length of not less than 7.8 µW/cm² at 1 meter in a 400 fpm airstream of 50° F.

Unit shall comply with ANSI/UL Standards 153, 1598 and 1995 and CSA standards. The manufacturer shall be an ISO 9001:2008 certified facility.

Ordering Information

Model No.	Part No.	Description	Length	Electrical
SEN 1 VO	12002000	Single-Ended Fixture	N/A	120-277 V, 70 W
GTS 12 VO	21000700	UVC Emitter	12"	45 W
GTS 16 VO	21000100	UVC Emitter	16"	55 W
GTS 20 VO	21000200	UVC Emitter	20"	64 W
GTS 24 VO	21000300	UVC Emitter	24"	72 W
GTS 30 VO	21000400	UVC Emitter	30"	86 W
GTS 36 VO	21000500	UVC Emitter	36"	100 W
GTS 42 VO	21000600	UVC Emitter	42"	110 W

Complies with current U.S. and Canadian safety standards for use in HVAC equipment

Registered to ISO 9001:2008 Certificate Registration No. 10002118 QM08

STERIL-AIRE®

Steril-Aire, Inc.

Corporate Office:
2840 N. Lima Street
Burbank, CA 91504
Telephone: 818-565-1128
Fax: 818-565-1129
Website: *www.steril-aire.com*
Email: *sales@steril-aire.com*

© 2010 Steril-Aire 1109 A-09/10

MECHANICAL UV LIGHT CONTACT:

KARL OELKER
NATIONAL SALES MANAGER
KOELKER@STERIL-AIRE.COM
CELL:612-859-4242
OFFICE:651-636-8655

Sizing a Steril-Aire solution for a Dogtopia installation.

Steril-Aire is a UVC Light (Emitter) and Fixture that gets installed on an AHU such that the Emitter extends across the discharge side of the coil. The Emitters are available in the following lengths:

- 16"
- 20"
- 24"
- 30"
- 36"
- 42"

Each line of Emitter across a coil covers 18" (9" above and 9" below) of coil height. If the AHU is brand new then the coverage is 24".

Examine the AHUs in your bid to determine how many kits and length of Emitters you will need. If the coil is taller than coverage, you'll need a second row. If the coil is wider than 42", you'll need to install another fixture on the opposite side for full coverage.

If the Air handler is 208/230V then you have all you need with the Dogtopia kits. If your unit is 460V then an additional stepdown transformer is needed for each kit.

Price of a Dogtopia Steril-Aire kit is $675 each. That includes the fixture, the Emitter in the size you request, and shipping. Step Down Transformers are $68 each and include shipping as well.

To order the kit from Steril-Aire, use part number 90000700-xx (xx=length of Emitter). Eg. For a kit with a 30" Emitter, the part number would be 90000700-30.

Additional questions? Call Steril-Aire at 818-565-1128

Engineering Consultants Incorporated
303 Federal Way Boise, ID 83705
Phone: 208.376.9820 Fax: 208.376.9822
www.eciboise.com

FOR BIDDING PURPOSES ONLY -
NOT FOR CONSTRUCTION

ARCHITECTS, INC.
17710 Detroit Avenue Lakewood, Ohio 44107
Phone (216) 521-5134 Fax (216) 521-4824
www.adaarchitects.cc

dogtopia

DOGTOPIA

2017 WOODLYNN AVENUE
MAPLEWOOD, MN 55109

This document ("Instrument of Service") was prepared by ADA Architects, Inc. ("ADA") specifically for the referenced project and is not intended for any other use. ADA retains all common law, statutory and other reserved rights, including copyrights. This Instrument of Service shall not be used on other projects, for additions to this project or for completion of this project by others without ADA's prior written consent. Any unauthorized use of this Instrument of Service shall be at the User's sole risk and without liability to ADA. ADA makes no warranties, express or implied, of merchantability or of fitness for a particular purpose.

FRANCHISEE
LANG, BERT LLC

REVISIONS

#	DATE	TYPE
1		
2		
3		
4		
5		

MECHANICAL DETAILS

DATE 03/23/20

JOB NO. 19492/18W09

M3.1
SHEET NO.

COM*check* Software Version 4.1.1.0

Mechanical Compliance Certificate

Project Information

Energy Code:	2015 IECC
Project Title:	Dogtopia - Maplewood, MN
Location:	Maplewood, Minnesota
Climate Zone:	6a
Project Type:	Alteration

Construction Site: Owner/Agent: Designer/Contractor:

Mechanical Systems List

Quantity System Type & Description

1 RTU-1 (Single Zone):
Heating: 1 each - Central Furnace, Gas, Capacity = 80 kBtu/h
Proposed Efficiency = 81.00% Et, Required Efficiency: 80.00 % Et or 78% AFUE
Cooling: 1 each - Single Package DX Unit, Capacity = 34 kBtu/h, Air-Cooled Condenser, No Economizer, Economizer exception: None
Proposed Efficiency = 14.00 SEER, Required Efficiency: 14.00 SEER
Fan System: FAN SYSTEM 1 -- Compliance (Motor nameplate HP method) : Passes

Fans:
FAN 1 Supply, Constant Volume, 1050 CFM, 0.8 motor nameplate hp, 0.0 fan efficiency grade

1 RTU-2 (Single Zone):
Heating: 1 each - Central Furnace, Gas, Capacity = 200 kBtu/h
Proposed Efficiency = 80.00% Et, Required Efficiency: 80.00 % Et or 78% AFUE
Cooling: 1 each - Single Package DX Unit, Capacity = 241 kBtu/h, Air-Cooled Condenser, No Economizer, Economizer exception: Heat Recovery System
Proposed Efficiency = 11.40 EER, Required Efficiency: 9.80 EER + 11.4 IEER
Fan System: FAN SYSTEM 2 -- Compliance (Motor nameplate HP method) : Passes

Fans:
FAN 2 Supply, Constant Volume, 3585 CFM, 4.0 motor nameplate hp, 0.0 fan efficiency grade

1 DCU-1 (Single Zone):
Split System Heat Pump
Heating Mode: Capacity = 12 kBtu/h,
Proposed Efficiency = 10.00 HSPF, Required Efficiency = 8.20 HSPF
Cooling Mode: Capacity = 12 kBtu/h,
Proposed Efficiency = 19.00 SEER, Required Efficiency: 14.00 SEER
Fan System: FAN SYSTEM 3 -- Compliance (Motor nameplate HP method) : Passes

Fans:
FAN 3 Supply, Constant Volume, 380 CFM, 0.1 motor nameplate hp, 0.0 fan efficiency grade

2 WH-1:
Gas Instantaneous Water Heater, Capacity: 0 gallons, Input Rating: 200 kBtu/h
Proposed Efficiency: 96.00 % Et, Required Efficiency: 80.00 % Et

Mechanical Compliance Statement

Compliance Statement: The proposed mechanical alteration project represented in this document is consistent with the building plans, specifications, and other calculations submitted with this permit application. The proposed mechanical systems have been designed to meet the 2015 IECC requirements in COM*check* Version 4.1.1.0 and to comply with any applicable mandatory requirements listed in the Inspection Checklist.

Name - Title Signature Date

Engineering Consultants Incorporated
303 Federal Way Boise, ID 83705
Phone: 208.376.9820 Fax: 208.376.9822
www.eciboise.com

FOR BIDDING PURPOSES ONLY - NOT FOR CONSTRUCTION

ARCHITECTS, INC.
17710 Detroit Avenue Lakewood, Ohio 44107
Phone (216) 521-5134 Fax (216) 521-4824
www.adaarchitects.cc

dogtopia

DOGTOPIA

2017 WOODLYNN AVENUE

MAPLEWOOD, MN 55109

This document ("Instrument of Service") was prepared by ADA Architects, Inc. ("ADA") specifically for the referenced project and is not intended for any other use. ADA retains all common law, statutory and other reserved rights, including copyrights. This Instrument of Service shall not be used on other projects, for additions to this project, or for completion of this project by others without ADA's prior written consent. Any unauthorized use of this Instrument of Service shall be at the User's sole risk and without liability to ADA. ADA makes no warranties, express or implied, of merchantability or of fitness for a particular purpose.

FRANCHISEE

LANG, BERT LLC

REVISIONS

#	DATE	TYPE
1		
2		
3		
4		
5		

MECHANICAL ENERGY CODE COMPLIANCE FORMS

DATE 03/23/20

JOB NO. 19492/18W09

M4.0

SHEET NO.

MECHANICAL SPECIFICATIONS

SECTION 15100 - MECHANICAL GENERAL PROVISIONS

PART 1 - GENERAL

1.1 SCOPE
- A. General:
  1. The Bidding Requirements, Contract Requirements, and the General Requirements (Division 1) of these specifications shall govern all parts of the work.
- B. Work Included:
  1. Install work in accordance with these specifications and the accompanying plans. Furnish all labor, material, and equipment together with all incidental items not specifically shown or specified which are required by good practice to provide the complete mechanical systems as described.
  2. The HVAC Contractor(s) and all sub-tier Contractors shall provide installed equipment cut sheets and purchase orders required for utility rebates.
- C. Coordination and Site Visits:
  1. This section of the work requires examination of and reference to all architectural, structural, utility, and electrical drawings for construction conditions that may affect the work. Inspect the building site and existing facilities for verification of existing conditions. Base all measurements from established benchmarks. Any discrepancy between actual measurements and those indicated, which prevents following good practices or the intent of the drawings and specifications, shall be reported to the Architect/Engineer, and work halted until instructions are received from the Architect/Engineer.

1.2 CODES, PERMITS, FEES
- A. Install all work in accordance with applicable codes and standards. Obtain all required permits; pay all required fees including utility connections or extensions, in connection with this portion of the construction. Obtain all required certificates of inspection for the work.

PART 2 - PRODUCTS

2.1 MATERIALS AND WORKMANSHIP
- A. Materials:
  1. All materials and equipment shall be of first quality, new, full size and weight, standard in every respect, and suitable for the space required. Use the same manufacturer for products of similar class or service, such as valves, pumps, controls, and air handlers. Protect all materials against loss, theft, or damage before and after installation.
  2. Furnish equipment that will operate under all conditions of load without any sound or vibration that is objectionable in the opinion of the Architect/Engineer. Vibration or noise considered objectionable will be corrected by the Subcontractor at his expense.
  3. Furnish and install all necessary foundations, supports, pads, bases, and piers required for all materials and equipment furnished under this contract.
  4. Provide all required fire stopping at piping and duct penetrations of fire-rated walls, floors, ceilings, and roofs.
- B. Workmanship:
  1. All materials and equipment shall be installed in a neat and workmanlike manner by competent specialists for each sub trade. Work shall be installed to the satisfaction of the Architect/Engineer with unsatisfactory work removed and reinstalled to his satisfaction at no extra cost to the Owner.
  2. Provide all cutting and patching necessary to install the work specified in this section. Patching shall match adjacent surfaces. No structural members shall be cut without the approval of the Architect/Engineer. Provide all sleeves and inserts required before the floors and walls are built.
  3. Locate all equipment that must be serviced in fully accessible positions. Provide clearance for removal of replacement parts and components, and with necessary couplings or flanges to remove the component for maintenance.

2.2 SUBMITTALS AND SUBSTITUTIONS
- A. Substitutions:
  1. Substitutions are only accepted where noted below in section "C". Where not noted that substitutions are accepted, all equipment shall be per plan.
  2. Where substitutions are accepted, final approval is required by the Engineer on Record. Manufacturer's trade names and catalog numbers stated herein are intended to indicate the quality of equipment or materials desired. Final approval is to be based on requirements of the plans and specifications.
  3. Acceptance or rejection of proposed substitutions shall not cause additional cost to the Owner or Architect/Engineer. Any changes to the Architectural, Structural, Mechanical, Electrical, and Control systems due to alternate manufacturers shall be the responsibility of the Contractor and Supplier.
- B. Submittals:
  1. Within thirty days after award of this contract, provide a complete list of all materials and equipment proposed for this project. List shall contain make, type, manufacturer's name, and trade designation of all materials and equipment. Submittal shall also include manufacturer's complete specification for each item, including capacities, ratings, etc., and dimensions as required to check space requirements. Provide six physical copies or a digital copy of all submittals.
  2. Approval of submittals shall not relieve the contractor from responsibility for deviations from the plans or specifications, unless he has, in writing, called the Architect's /Engineer's attention to deviations at the time of submission, and obtained his written approval. Approval of submittals does not relieve the contractor from responsibility for errors in shop drawings or literature.
- C. Equipment Requiring Submittals:
  1. All Scheduled Equipment
  2. Ductless/Mini Split Systems [Substitutions Allowed]
  3. Split Systems under 5 tons nominal [Substitutions Allowed]
  4. Exhaust Fans [Substitutions Allowed]
  5. Grilles, Registers, Diffusers [Substitutions Allowed]
  6. Fire and Combination Fire/Smoke Dampers

PART 3 - EXECUTION

3.1 ACCESSIBILITY & SAFETY
- A. Accessibility:
  1. All equipment which must be serviced or operated shall be located in fully accessible position. Minor changes from the drawings may be made to allow for better accessibility. All changes shall be approved prior to actual installation.
  2. Access panels shall be provided if required for accessibility. Subcontractor shall furnish the required panels to the General Contractor and the required location for all access panels. Panels shall be installed by the General Contractor.
- B. Safety:
  1. Subcontractor shall provide guards for all belt drives and rotating machinery. No water piping shall run immediately over or within a 3-foot plan view clearance of any electrical panel or motor starter. Where piping must be located within these zones, install piping inside a conduit to prevent water access to electrical equipment.

3.2 COORDINATION
- A. Coordinate all work with the various trades involved to provide a complete and satisfactory installation. The exact details of piping, ductwork, and equipment are not shown. No additional compensation will be made for offsets or relocation required in coordination with other trades.
- B. Alterations required due to improper supervision by the subcontractor shall be made at no extra cost, to the satisfaction of the Architect/Engineer.

3.3 ELECTRICAL
- A. Electric motors required for equipment specified in this section shall be provided and installed by this Subcontractor. Motor starters, relays, pilot lights, etc., are, in general, to be furnished and installed by the Electrical Contractor.
- B. Starters, relays, controls, disconnects, etc., which are factory assembled into or provided with (per schedules) packaged equipment shall be furnished by the Mechanical Contractor under this section of the specifications.
- C. All motors shall be provided with adequate starting and protective equipment as specified or required. Motor capacity shall be sufficient to operate driven device under all conditions of operation and load without overload. Minimum horsepower shall be as specified.

3.4 IDENTIFICATION & CODING
- A. Painting:
  1. All painting of mechanical equipment, accessories, ductwork, and piping shall be furnished and applied under the Architectural section of these specifications. All painting shall be completed before any identification markings are applied.
- B. Equipment:
  1. Identify all equipment with a black Formica label, with white reveal when engraved. Lettering to be 3/16-inch high minimum. In general, identify equipment as to area served in addition to title and code number of the equipment as taken from the plans.

3.5 TESTING
- A. Piping:
  1. Piping shall be tested before insulation has been installed. Delicate control mechanisms shall be removed during tests to prevent shock damage. The use of chemicals or compounds to stop leaks shall not be permitted.
- B. Systems:
  1. All systems, including heating, ventilating, air conditioning, shall be tested at the completion of the building to establish that the systems operate as specified and required. Testing shall be performed after air balancing is completed.
  2. All controls shall be calibrated accurately and all equipment shall be adjusted for satisfactory operation. Excessive vibration or noise from any system shall be corrected.
  3. The air conditioning system shall be tested for satisfactory operation when the outside air temperature reaches 60°F or warmer. All other systems shall be tested at building completion. All tests shall be performed in the presence of the Architect/Engineer or his representative.

3.6 BALANCING
- A. Scope:
  1. Prior to final acceptance by the Owners, all air systems shall be balanced to deliver the quantities as specified or directed. The air balance shall be performed by an independent agency specializing in testing, adjusting, and balancing, and is certified by the Testing, Adjusting, and Balancing Bureau (TABB), and the National Environmental Balancing Bureau (NEBB). Total system balance shall be in accordance with TABB.
  2. Balance contractor's main office shall be located within 50 miles from the project site.
- B. Air Balancing:
  1. Balancing of the air system shall consist of:
     - a. Adjust all air volumes, including outside air, to the quantities shown, with allowable variation of plus or minus 10 percent.
     - b. Record all system, outside air, zone, diffuser, grille, and register C.F.M. Use volume control devices to regulate air quantities only to the extent that adjustments do not create objectionable air motion or sound levels. Balancing Engineer shall work with the Contractor to set the CFM quantities for zone dampers or zone damper/heaters.
     - c. Test and record all system static pressures, inlet and discharge, on all packaged units, fans, and terminal units. Vary total system air quantities by adjustment of fan speeds. Provide drive changes as necessary. Vary branch air quantities by damper regulation.
     - d. Test and record motor full load amps and nameplate amps.
     - e. Test and record entering and leaving temperatures at all coils.
     - f. Adjust all automatically operated dampers, in cooperation with the Mechanical Contractor, to the required settings. Adjust outside air automatic dampers, outside air, return air, and exhaust dampers for design conditions within specified tolerances. Where modulating dampers or economizers are provided, take measurements at full return air, minimum outside air, and 100 percent outside air mode of operation.
     - g. Adjust diffusers and grilles for proper deflection, throw, and coverage. Eliminate drafts and excessive noise where possible.
     - h. Mark final positions of all balance dampers with a red felt pen.
     - i. Air systems shall be balanced in accordance with standard procedures and recognized practices of the Associated Air Balance Council, and the Testing, Adjusting, and Balancing Bureau.
- C. Quality Assurance:
  1. The Balancing Contractor shall demonstrate to the Engineer of record, flow verification for at least 10% of the balanced devices as selected by the Engineer. If more than 25% of the tested devices do not meet the designed or balance report, then the entire system balance must be re-balanced.
- D. Balance Reports:
  1. Submit four physical copies or a digital copy of the air system balance report to the Architect/Engineer for evaluation and approval. Reports shall be on TABB/SMACNA forms that indicate information addressing each of the testing methods, readings, and adjustments.

3.7 CLEANING & ADJUSTING
- A. Thoroughly clean all parts of the system at the completion of the work. Install new, clean air filters in all systems. Adjust all devices for proper operation and lubricate all equipment as required. Repaint any painted surface that has been damaged.

3.8 PROJECT CLOSEOUT
- A. Operations & Maintenance (O & M) Manual: The Contractor shall provide two copies of an operations and maintenance manual at least thirty days prior to completion of work. The manual shall be of the three ring binder type, entitled "Operations and Maintenance Manual", with the job name and year of completion also included. The manual shall include, as a minimum:
  1. Maintenance instructions for all equipment, including lubrication requirements.
  2. Equipment suppliers names, addresses, and telephone numbers.
  3. Equipment catalog cuts, ratings tables, model numbers, serial numbers, and accessories.
  4. Parts numbers for all replaceable parts.
  5. Air systems balance report as hereinbefore specified.
  6. Filter chart listing unit callout, size of filters, and quantity of filters.
  7. Guarantee letter as specified below.
  8. Any additional information required to enable the Owner to properly maintain the building mechanical system.
  9. After approval of the Operations and Maintenance Manual by the Architect/Engineer, the Contractor shall furnish two copies of the manual to the Owner.
- B. Mechanical System Training Period:
  1. After the mechanical system is completely installed and operational, the mechanical contractor shall provide a minimum of 8 hours training and instruction time for the building Owner or his representative. During this period, the contractor shall instruct the Owner in the operation and maintenance of all parts of the mechanical system, using the O & M manual where applicable.
- C. As-Built Drawings:
  1. Provide two sets of red-lined mechanical drawings showing the work as it was actually installed. The drawings shall indicate all departures from the contract drawings, and shall locate all underground utility lines with dimensions from established building lines. Make all notations neat and legible, with red indelible pencil. At the completion of the work, these as-built drawings shall be signed and dated by the Mechanical Contractor, and returned to the Architect/Engineer.
- D. Guarantee:
  1. All work furnished under this section shall be guaranteed in writing to be free from defective work or materials for a period of one year after acceptance of the contract. All repairs or replacements because of defective materials or workmanship or noncompliance with code shall be provided without additional cost to the Owner. Contractor shall furnish a letter indicating above guarantee with space for date of acceptance and expiration of guarantee. Letter shall be included in O & M Manual.

END OF SECTION 15100

SECTION 15300 - HEATING, VENTILATING, AND AIR CONDITIONING

PART 1 - GENERAL

1.1 SCOPE
- A. This section covers the work necessary for the heating, ventilating, and air conditioning system, complete. The Mechanical General Provisions, Section 15100, is to be included as a part of this section of the specifications.

1.2 CODES & STANDARDS
- A. The heating, ventilating, and air conditioning system shall be installed in accordance with the latest edition of the following codes and standards:
  1. Florida Building Code - Mechanical (FBCM)
  2. Florida Building Code - Energy Conservation (FBCEC)
  2. Florida Building Code (FBC)
  3. American Society of Heating, Refrigeration, and Air Conditioning Engineers (ASHRAE)
  4. National Fire Protection Association (NFPA)
  5. Sheet Metal and Air Conditioning Contractors National Association, Inc. (SMACNA)

PART 2 - PRODUCTS

2.1 HVAC EQUIPMENT (including fan coils, rooftop units, heat pumps, condensing units, electric heaters, and exhaust fans)
- A. See plans for requirements.

2.2 GRILLES, REGISTERS, DIFFUSERS AND LOUVERS
- A. See plans for requirements.

2.3 AIR DISTRIBUTION
- A. Ductwork:
  1. Low pressure ductwork shall be fabricated from galvanized sheet metal, unless otherwise indicated. Construction requirements shall be in accordance with SMACNA Low Pressure Duct Construction Standards, latest edition. All sheet metal ductwork shall be sealed with McGill United Sheet Duct Sealer or equal, in accordance with the International Energy Conservation Code, latest edition. Low pressure ductwork shall be constructed to the following SMACNA static pressure standards:
     - a. Supply air ductwork = 2" W.G.
     - b. Return, Exhaust, Outside Air Intake ductwork = 1" W.G.
  2. Low pressure ductwork located in exposed ceiling areas, shall be spiral-type ducts with a "paint-grip" finish, on both ductwork and associated fittings that can be painted.
  3. Low pressure ductwork which is exposed or located in mechanical rooms shall be fabricated from galvanized sheet metal. Construction requirements shall be in accordance with SMACNA Low Pressure Duct Construction Standards, latest edition.
  4. Low or medium pressure, double-wall acoustically-insulated ductwork shall have a minimum 1" insulation, perforated metal lining & shall be McGill Acoustl-k27, Metaltec, or equal.
  5. Ductwork penetrating protective elements of fire-rated corridor walls, with no openings into corridor, shall be constructed of minimum 26 gauge galvanized steel.
  6. Exterior exposed ductwork shall be fabricated from galvanized sheets. All joints and seams shall be standing-seam type with sealing mastic to provide watertight construction. All ductwork shall be externally insulated with rigid, foil-faced insulation. Insulation shall be tapered on top to create a sloped surface with no flat spots. All exposed surfaces shall be wrapped with a self-adhesive membrane capable of 400% elongation by Polyguard or equal.
  7. Flexible ducts shall be listed per UL-181 standard as Class 1 flexible air duct and complying with NFPA Standards 90A and 90B. Ducts shall be insulated with a minimum R-5 value, and shall have a maximum vapor transmission value of .05 perms. Ducts shall be factory made with and composed of: a CPE liner duct permanently bonded to a coated spring steel wire helix. Duct shall be GREENGUARD tested and certified, carry a ten-year warranty for the labor to replace the duct should there be a factory defect. Low permeability outer vapor barrier of fiberglass bidirectional reinforced metalized laminate film shall complete the composite. Pressure rating shall be 6" w.g. and maximum length shall be 6 feet except in apartment units. Attach to duct take-off and terminal unit with nylon clamp or tie. Thermaflex M-KE(R-6), Flexmaster 8-M, or approved equal.
- B. Duct Accessories:
  1. Turning vanes shall be installed in rectangular or square elbows. Vanes shall be installed in vane side rails. Vanes shall be double- wall vanes, and be fabricated and installed per SMACNA standards.
  2. Volume dampers shall be fabricated from galvanized steel in accordance with SMACNA standards. Dampers shall have a continuous galvanized steel shaft, with damper regulators and end bearings. Dampers located above inaccessible ceilings (hard ceilings) shall be furnished with concealed ceiling damper regulators. Dampers shall be pressure rated equal to the design duct pressure rating.
  3. Flexible connections shall be provided at all rotating fan equipment. Connectors shall be of fire, water, and weather resistant material.
  4. Fire dampers shall be UL-labeled with frame, locking assembly, accordion style folded blades, and fusible link. Dampers shall be Style B with blades stored outside of the air stream. Provide duct inspection door at each fire damper. Minimum size shall be 8" x 8". Inspection door shall be provided with a steel frame with gasket around periphery, and a hinged panel.
  5. Combination smoke and fire dampers are to be fusible link type with factory sleeve and electric operator located exterior to duct. 120V operator to be spring return, fail closed with 212 degrees F link and UL label. Damper to be fire-rated to a minimum of 1.5 hours and smoke leakage rated Class I or II. Provide duct inspection door at each damper. Minimum size shall be 8" x 8". Inspection door shall be provided with a steel frame with gasket around periphery, and a hinged panel.

2.4 PIPING SYSTEMS:
- A. Refrigerant Piping:
  1. Refrigerant piping shall be Type L hard drawn copper, ASTM B280, with wrought copper fittings and Silvaloy joints.
  2. Refrigerant piping shall be manufacturer's standard line sets, in lengths as required for proper installation. Coiling of excess tubing will not be acceptable.
- B. Condensate Drain Piping:
  1. See Plumbing Specifications, Section 15200 for piping requirements.
- C. Pipe Hangers and Supports:
  1. See Plumbing Specifications, Section 15200 for hanger and support requirements for piping systems. See drawings for seismic support requirements for piping systems.

2.5 INSULATION:
- A. General:
  1. All insulation shall have composite fire and smoke hazard ratings, as tested by ASTM E-84, NFPA 255, and UL 723, not exceeding:
     - Flame Spread 25
     - Smoke Developed 50
- B. Ductwork - External Insulation:
  1. See Duct Insulation Schedule for R-values and application schedule.
  2. External duct insulation shall be flexible fiberglass blanket-type, formaldehyde-free duct wrap.
  3. All joints shall be taped with UL-listed tape to provide a continuous vapor barrier.
  4. Exposed supply and return ducts in conditioned spaces shall not be externally insulated.
- C. Ductwork - Internal Liner:
  1. Liner shall be flexible fiberglass duct liner. Liner shall be attached with 100% coverage of manufacturers recommended adhesive and welded or mechanically fastened galvanized steel pins. All exposed edges of liner shall be coated with adhesive. Duct dimensions shown are net air side face-to-face of duct liner.
- D. Piping Insulation - Refrigerant Piping:
  1. Insulation on refrigerant suction piping shall be one-piece preformed flexible formed plastic tubing with built-in closed cell vapor barrier. Seal laps and butt joints with moisture resistant adhesive to provide a continuous vapor seal. Furnish 1/2" thick insulation for 1⅛" and smaller pipe, and 1" thick insulation for pipe larger than 1⅛". Exterior insulation shall be coated with a weather- and UV-resistant coating as recommended by insulation supplier. Insulation shall have a conductivity not exceeding 0.27 Btu-inch/hour-sq. ft.-°F.

2.6 VIBRATION ISOLATION
- A. General:
  1. All rotating equipment and appurtenances connected to rotating equipment shall be vibration isolated from the supporting structure. No metal to metal contact will be permitted between fixed and floating parts. All metal isolators exposed to weather shall be hot dipped galvanized after fabrication. Piping connected to rotating equipment shall be hung with spring hangers for first 50 pipe diameters.
- B. Floor-Mounted Spring Isolators:
  1. Isolators shall be free standing, laterally stable, and include acoustical friction pads and leveling bolts. Isolators shall have a minimum ratio of spring diameter to operating spring height of 1.0 and an additional travel to solid equal to 50% of rated deflection.
- C. Floor-Mounted Neoprene Pads:
  1. Isolators shall be neoprene waffle, or combination neoprene and cork sandwich. Pads shall be sized and selected as per manufacturers loading requirements.
- D. Spring Hangers:
  1. Vibration hanger shall contain a spring and double deflection neoprene element in series. Spring shall have a diameter not less than 0.8 of compressed operating spring height. Spring shall have a minimum additional spring travel of 50 percent between design height and solid height. Spring shall permit a 15 degree angular misalignment without rubbing on hanger box.

2.7 SEISMIC SUPPORTS
- A. All equipment, ductwork, and piping shall be seismically supported as required by the International Building Code, latest edition. Support details shall be as indicated on the Drawings.

2.8 CONTROL SYSTEM
- A. General:
  1. The Mechanical Contractor shall be responsible for a complete and operable control system, including equipment, installation, and accessories required to perform the required control functions. All control conduit and wiring shall be furnished by the Electrical Contractor. Thermostats, sub-base switches, remote control devices, etc., shall be supplied by the Mechanical Contractor and installed and connected by the Mechanical Contractor. The Mechanical Contractor shall furnish the Electrical Contractor with wiring diagrams for all mechanical equipment and controls.
  2. The control system shall be basically electric, with supplementary electronic devices as required.
- B. Control Equipment and Accessories:
  1. Duct Smoke Detector:
     - a. Smoke detector shall be products of combustion detector and shall be UL listed. The unit shall be designed for detection of combustion gases, fire, and smoke in air ducts in compliance with NFPA Pamphlet 90A. The sheet metal contractor shall provide a minimum 18"x18" hinged access door in inaccessible ceilings for each detector that is furnished. The sheet metal contractor is also responsible for providing all necessary transitions in the ductwork necessary for mounting of the duct detector.
  2. Thermostats:
     - a. See mechanical schedules for model information.
     - b. Thermostats shall be 7-day programmable type, with automatic changeover from heating to cooling, and shall be provided with auxiliary contacts.
     - c. Where humidity sensors are indicated on drawings, thermostat shall have integral humidity sensing capabilities or be provided with separate humidity sensor.
     - d. Thermostats in public areas shall be provided with lockable covers.
     - e. Thermostats installed on exterior walls shall be mounted on an insulating block, or on foam insulation filled J-box.
     - f. All thermostats shall have a mounting height of 48 inches, to the centerline of the device, unless otherwise noted on the electrical drawings.

PART 3 - EXECUTION

3.1 WORKMANSHIP
- A. General:
  1. Install all materials and equipment as shown and in strict accordance with the applicable codes for the State and/or city. Plans do not attempt to show exact details of all piping and ductwork, and no extra payment will be allowed for offsets required due to obstructions by other trades. All work shall be done in a neat and orderly fashion and left in a condition satisfactory to the Architect/Engineer.
  2. All piping shall be run parallel or perpendicular to established building lines. Install piping so as to allow for expansion. Install all valves with stems horizontal or above. Install air vents at all high points. Provide all piping which passes through walls, floors, or ceilings with standard weight pipe sleeves.
- B. Insulation:
  1. All piping insulation shall be applied over clean, dry surfaces after system has been pressure tested and any leaks corrected. Finished appearance of all insulation shall be smooth and continuous. Provide coat of insulating cement where needed to obtain this result.
  2. Flexible duct insulation shall be secured to duct surface with 4-inch wide bands of adhesive applied on maximum 18-inch centers. Additional galvanized tie-wire support shall be furnished as required and recommended by the insulation manufacturer.
- C. Diffusers, Registers and Grilles:
  1. All diffusers, grilles, and registers shall be installed tight on their respective mounting surfaces and shall be accurately centered on ceiling tile, recesses, windows, or doors.
- D. Ductwork:
  1. All sheet metal work shall be done by qualified, experienced mechanics in accordance with the requirements of ASHRAE and the latest edition of the applicable SMACNA Manual. All ductwork shall be installed in a neat and orderly manner, and shall be adequately supported to prevent vibration or sagging. All sheet metal ductwork shall be sealed with United-Sheet Metal Duct Sealer or equal.
- E. Air Conditioning Units:
  1. Units shall be installed approximately where shown on the plans to provide access space for filter changing, motor, drive and bearing servicing, and fan shaft and coil removing. Unit shall not be operated until filters are installed. Isolate sheet metal ducts from all fans with flexible connectors.
- F. Condensing Units/Heat Pumps:
  1. Units located at grade shall be positioned such that they are beyond the roof drip line. Units shall be installed on a 6" concrete pad.
  2. Units located on the roof shall be positioned 10-feet from roof edge. Units shall be installed on an isolation pad or equipment rails.
- G. Filters - provide and install one clean set of filters for all air handling equipment upon project completion.
- H. Piping:
  1. All piping shall be run parallel or perpendicular to established building lines.
  2. Install piping so as to allow for expansion. Piping supports must allow for lines to expand and contract freely. Where piping runs exceed 100 feet in length, an offset or expansion loops must be installed in the middle of the piping run.

END OF SECTION 15300

END OF MECHANICAL SPECIFICATIONS

Engineering Consultants Incorporated
303 Federal Way Boise, ID 83705
Phone: 208.376.9820 Fax: 208.376.9822
www.eciboise.com

FOR BIDDING PURPOSES ONLY - NOT FOR CONSTRUCTION

ADA ARCHITECTS, INC.
17710 Detroit Avenue Lakewood, Ohio 44107
Phone (216) 521-5134 Fax (216) 521-4824
www.adaarchitects.cc

dogtopia

DOGTOPIA

2017 WOODLYNN AVENUE

MAPLEWOOD, MN 55109

This document ("Instrument of Service") was prepared by ADA Architects, Inc. ("ADA") specifically for the referenced project and is not intended for any other use. ADA retains all common law, statutory and other reserved rights, including copyrights. This Instrument of Service shall not be used on other projects, for additions to this project or for completion of this project by others without ADA's prior written consent. Any unauthorized use of this Instrument of Service shall be at the User's sole risk and without liability to ADA. ADA makes no warranties, express or implied, of merchantability or of fitness for a particular purpose.

FRANCHISEE

LANG, BERT LLC

REVISIONS

#	DATE	TYPE
1		
2		
3		
4		
5		

MECHANICAL SPECIFICATIONS

DATE 03/23/20

JOB NO. 19492/18W09

M5.0

SHEET NO.

GENERAL NOTES:

SEE SHEET P3.1.

KEY NOTES:

1. CAP WASTE BELOW FLOOR AND VENT ABOVE CEILING, SAW-CUT AND PATCH FLOOR AS REQUIRED TO MATCH EXISTING.
2. CAP HW AND/OR CW PIPING ABOVE CEILING OR BELOW FLOOR. SAW-CUT AND PATCH FLOOR AS REQUIRED TO MATCH EXISTING.
3. EXISTING MEDIUM PRESSURE GAS PIPING ON ROOF TO REMAIN.
4. DEMO AND DISCARD EXISTING FLOOR DRAIN, FLOOR CLEANOUT, AND WALL CLEANOUT UNLESS NOTED TO REMAIN. CAP WASTE BELOW SLAB. SAW-CUT AND PATCH FLOOR AS REQUIRED TO MATCH EXISTING
5. DEMO AND DISCARD EXISTING MEDIUM PRESSURE GAS PIPING BACK TO POINT OF CONTACT. SEE SHEET P2.0 FOR EXACT LOCATIONS BEFORE START OF WORK.
6. RTU DEMO BY OTHERS.

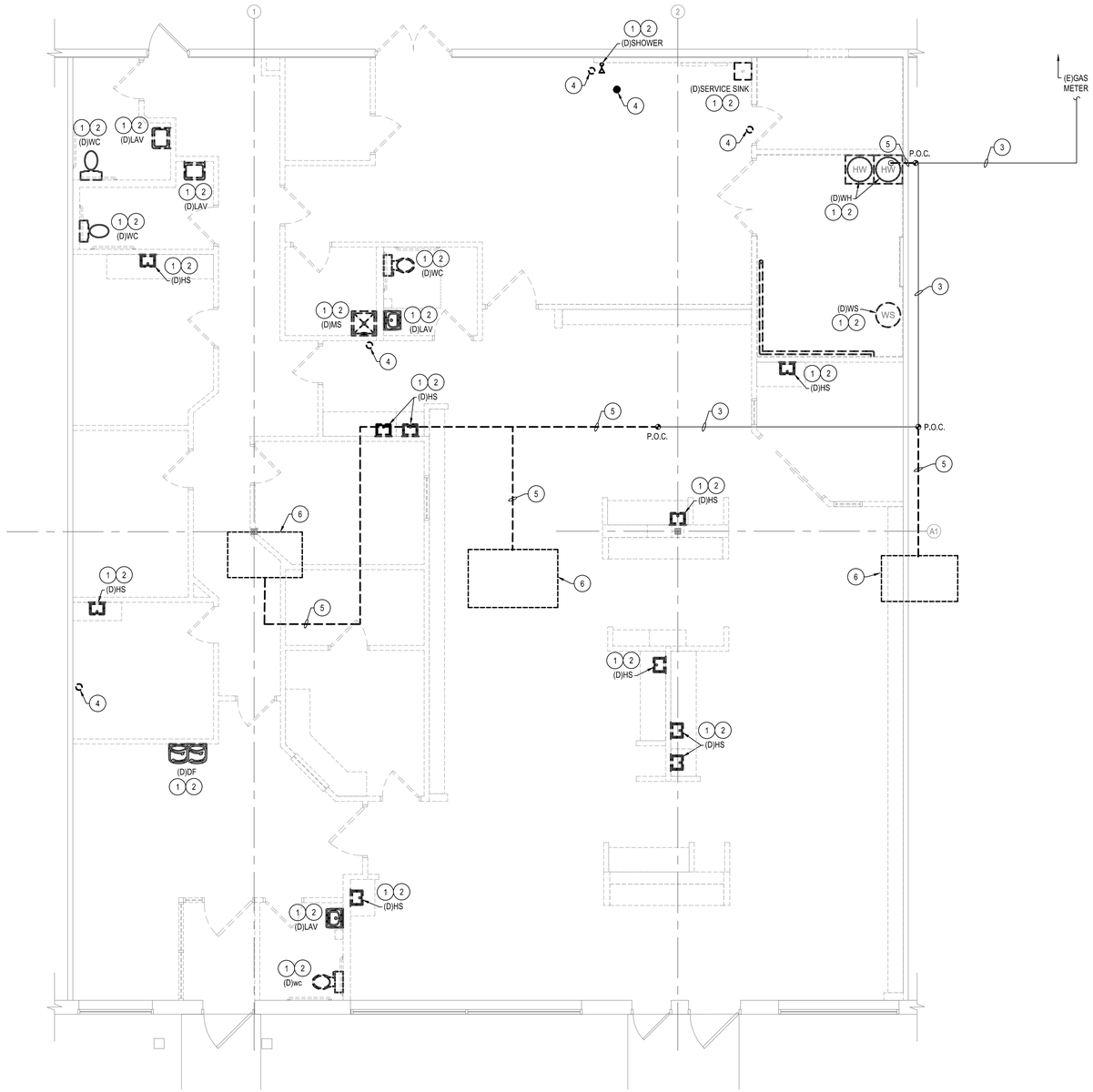

PLUMBING DEMO PLAN

SCALE 3/16" = 1'-0"

FOR BIDDING PURPOSES ONLY - NOT FOR CONSTRUCTION

ADA ARCHITECTS, INC.
17710 Detroit Avenue Lakewood, Ohio 44107
Phone (216) 521-5134 Fax (216) 521-4824
www.adaarchitects.cc

dogtopia

DOGTOPIA

MAPLEWOOD, MN 55109

2017 WOODLYNN AVENUE

This document ("Instrument of Service") was prepared by ADA Architects, Inc. ("ADA") specifically for the referenced project and is not intended for any other use. ADA retains all common law, statutory and other reserved rights, including copyrights. This Instrument of Service shall not be used on other projects, for additions to this project or for completion of this project by others without ADA's prior written consent. Any unauthorized use of this Instrument of Service shall be at the User's sole risk and without liability to ADA. ADA makes no warranties, express or implied, of merchantability or of fitness for a particular purpose.

FRANCHISEE

LANG, BERT LLC

REVISIONS

#	DATE	TYPE
1		
2		
3		
4		
5		

PLUMBING DEMO PLAN

DATE 03/23/20

JOB NO. 19492/18W09

PD1.0

SHEET NO.

Engineering Consultants Incorporated
303 Federal Way Boise, ID 83705
Phone: 208.376.9820 Fax: 208.376.9822
www.eciboise.com

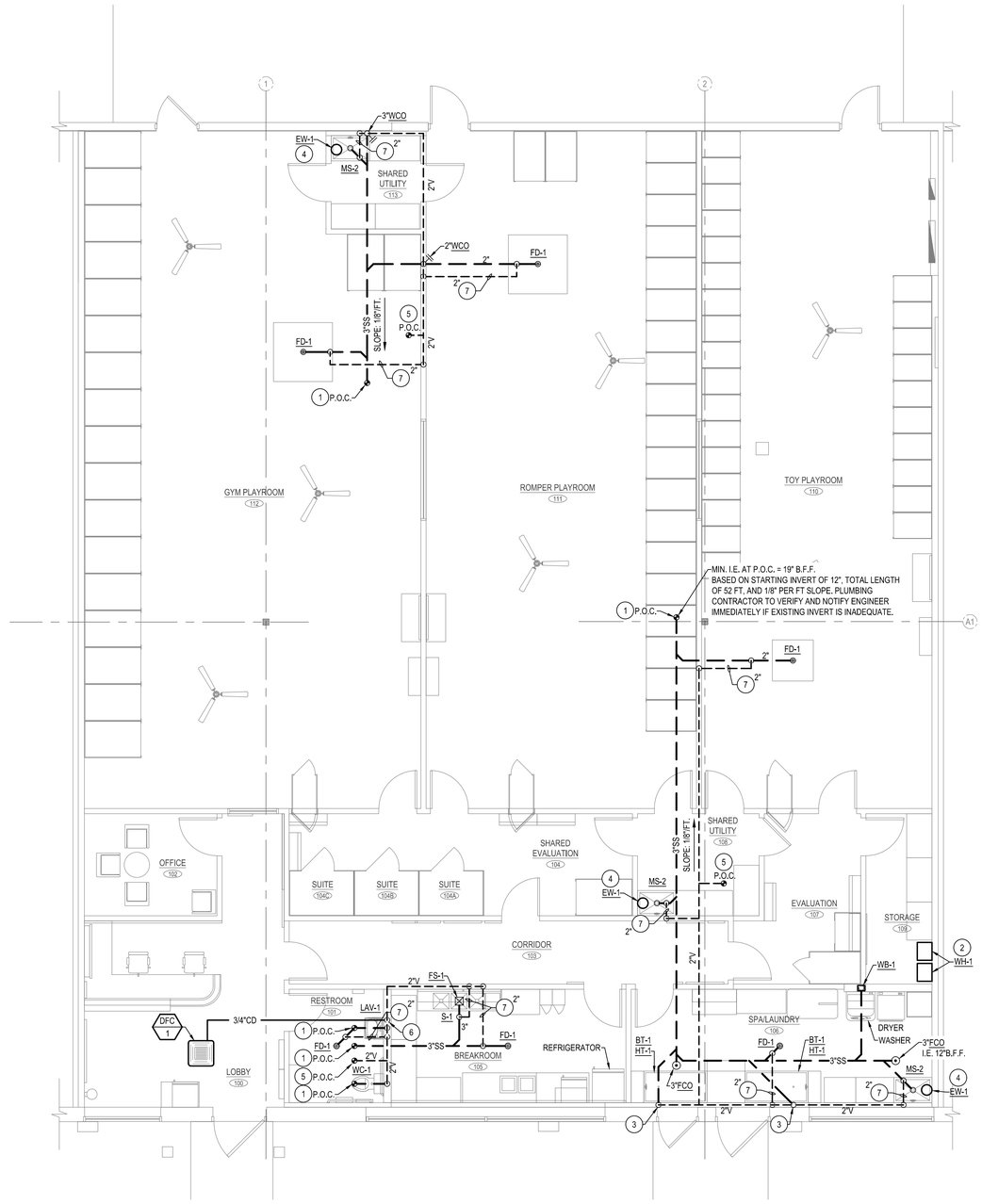

WASTE & VENT PLAN

SCALE 3/16" = 1'-0"

GENERAL NOTES:

SEE SHEET P3.1.

KEY NOTES:

1. CONNECT NEW WASTE PIPING TO EXISTING WASTE PIPING. VERIFY SIZE, EXACT LOCATION, AND DEPTH OF EXISTING WASTE PIPING PRIOR TO START OF ANY WORK.
2. DRAIN CONDENSATE FULL SIZE FROM EACH WATER HEATER TO MS-2 THROUGH A LEGAL AIR GAP.
3. ROUGH-IN FOR TUB DRAINS SHALL BE A MAXIMUM OF 14" A.F.F. SEE ARCHITECTURAL PLANS AND DOGTUBS.COM FOR ADDITIONAL TUB INFO.
4. DRAIN EYEWASH STATION TO MOP SINK THROUGH A LEGAL AIR GAP.
5. CONNECT NEW VENT PIPING TO EXISTING VENT SYSTEM. VERIFY EXACT LOCATION BEFORE START OF ANY WORK.
6. 3/4" CONDENSATE DOWN IN WALL TO LAV-1 TAILPIECE.
7. VENT BELOW SLAB.

NOTE TO CONTRACTOR

PLUMBING CONTRACTOR TO SCOPE/VIDEO WASTE AND STORM LINES AT THE START OF THE PROJECT TO ASSESS COMPATIBILITY WITH NEW DESIGN. CONTRACTOR TO VERIFY EXISTING LINES MEET ALL SIZE AND DEPTH REQUIREMENTS FOR NEW DESIGN, AS WELL AS DETERMINE ALL LINES ARE IN ACCEPTABLE WORKING CONDITION. CONTRACTOR SHALL SCOPE/VIDEO/CLEAN ALL WASTE AND STORM LINES AT PROJECT COMPLETION.

FOR BIDDING PURPOSES ONLY - NOT FOR CONSTRUCTION

ADA ARCHITECTS, INC.
17710 Detroit Avenue Lakewood, Ohio 44107
Phone (216) 521-5134 Fax (216) 521-4824
www.adaarchitects.cc

dogtopia

DOGTOPIA

MAPLEWOOD, MN 55109

2017 WOODLYNN AVENUE

This document ("Instrument of Service") was prepared by ADA Architects, Inc. ("ADA") specifically for the referenced project and is not intended for any other use. ADA retains all common law, statutory and other reserved rights, including copyrights. This Instrument of Service shall not be used on other projects, for additions to this project or for completion of this project by others, without ADA's prior written consent. Any unauthorized use of this Instrument of Service shall be at the User's sole risk and without liability to ADA. ADA makes no warranties, express or implied, of merchantability or of fitness for a particular purpose.

FRANCHISEE

LANG, BERT LLC

REVISIONS

#	DATE	TYPE
1		
2		
3		
4		
5		

WASTE & VENT PLAN

DATE 03/23/20

JOB NO. 19492/18W09

P1.0

SHEET NO.

eci
Engineering Consultants Incorporated
303 Federal Way Boise, ID 83705
Phone: 208.376.9820 Fax: 208.376.9822
www.eciboise.com

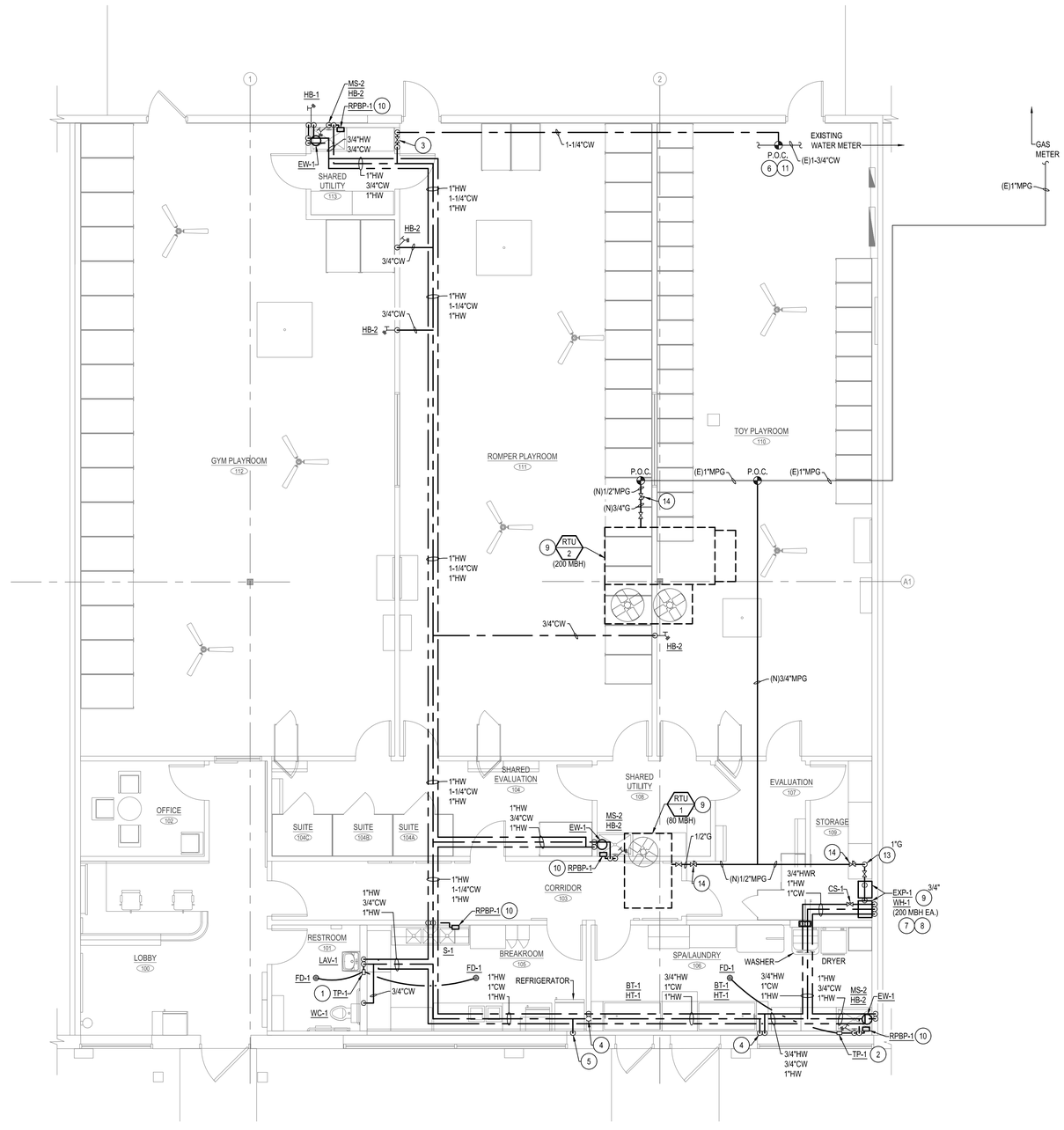

WATER & GAS PLAN

SCALE 3/16" = 1'-0"

GENERAL NOTES:

SEE SHEET P3.1.

KEY NOTES:

1. 1/2" TRAP PRIMER LINE FROM LAV-1 CW SUPPLY TO FD-1. PROVIDE ACCESS PANEL IN WALL FOR TRAP PRIMER.
2. 1/2" TRAP PRIMER LINE FROM MS-2 CW SUPPLY TO FD-1. PROVIDE ACCESS PANEL IN WALL FOR TRAP PRIMER.
3. TENANT'S MAIN SHUT-OFF VALVE IN ROMPER PLAYROOM 111 NEAR BACK DOOR. RECESSED IN WALL WITH ACCESS DOOR AT 48" A.F.F. PROVIDE PERMANENT LABEL ON ACCESS DOOR STATING "MAIN WATER SHUT-OFF VALVE".
4. 1/2" HW,CW DOWN IN WALL, ROUTE TO FAUCET AT HEAD OF TUB. ROUGH-IN AT 43" A.F.F. MAKE ALL NECESSARY CONNECTIONS. SEE ARCHITECTURAL PLANS AND DOGTUBS.COM FOR ADDITIONAL TUB INFO.
5. PROVIDE 1/2"CW REFRIGERATOR BOX IN WALL FOR CONNECTION TO ICE MAKER.
6. CONNECT NEW WATER PIPING TO EXISTING WATER PIPING. VERIFY EXACT LOCATION BEFORE START OF WORK. BACKFLOW PROTECTION IS EXISTING.
7. MOUNT WATER HEATERS ABOVE THE CEILING.
8. SEE DETAIL 8, SHEET P3.0 FOR ENLARGED PIPING DIAGRAM.
9. MAKE GAS CONNECTIONS TO EQUIPMENT WITH GAS COCK, DIRT LEG, UNION, AND FLEXIBLE HOSE CONNECTOR. SEE DETAIL 7, SHEET P3.0.
10. MAKE DIRECT CONNECTION TO CHEMICAL DISPENSER WITH DEDICATED CW LINE THROUGH RPBP-1.
11. ASSUMED WATER PRESSURE = 50 PSI. CONTRACTOR SHALL VERIFY ACTUAL WATER PRESSURE PRIOR TO CONSTRUCTION. IF PRESSURE IS LESS THAN 50 PSI, CONTRACTOR SHALL CONTACT THE ENGINEER FOR PIPE SIZING EVALUATION. IF PRESSURE EXCEEDS 80 PSI, A PRESSURE REDUCING VALVE SHALL BE PROVIDED. PIPING VELOCITY SHALL NOT EXCEED 8 FPS FOR COLD WATER AND 5 FPS FOR HOT WATER.
12. PLUMBING CONTRACTOR TO COORDINATE WITH GAS CO. FOR NEW METER SET IF REQUIRED. PLUMBING CONTRACTOR TO ENSURE ALL UTILITY REQUIREMENTS ARE MET. SEE SHEET P3.1 FOR TOTAL CONNECTED LOAD.
13. 1" NATURAL GAS DOWN THROUGH ROOF. VERIFY EXACT LOCATION BEFORE START OF ANY WORK. COORDINATE WITH LANDLORD'S ROOFING CONTRACTOR TO MAINTAIN ALL ROOF WARRANTIES.
14. NATURAL GAS REGULATOR, INLET PRESSURE = 2 PSI, OUTLET PRESSURE = 7"-11" W.C.

FOR BIDDING PURPOSES ONLY - NOT FOR CONSTRUCTION

ADA ARCHITECTS, INC.
17710 Detroit Avenue Lakewood, Ohio 44107
Phone (216) 521-5134 Fax (216) 521-4824
www.adaarchitects.cc

dogtopia

DOGTOPIA

MAPLEWOOD, MN 55109

2017 WOODLYNN AVENUE

This document ("Instrument of Service") was prepared by ADA Architects, Inc. ("ADA") specifically for the referenced project and is not intended for any other use. ADA retains all common law, statutory and other reserved rights, including copyrights. This Instrument of Service shall not be used on other projects, for additions to this project or for completion of this project by others without ADA's prior written consent. Any unauthorized use of this Instrument of Service shall be at the User's sole risk and without liability to ADA. ADA makes no warranties, express or implied, of merchantability or of fitness for a particular purpose.

FRANCHISEE

LANG, BERT LLC

REVISIONS

#	DATE	TYPE
1		
2		
3		
4		
5		

WATER & GAS PLAN

DATE 03/23/20

JOB NO. 19492/18W09

P2.0

SHEET NO.

Engineering Consultants Incorporated
303 Federal Way Boise, ID 83705
Phone: 208.376.9820 Fax: 208.376.9822
www.eciboise.com

CONTENTS
(1) HAIR TRAP
(2) SLIP NUTS
(1) 1-1/2" WASHER
(1) FILTER/HANDLE ASSEMBLY
(1) O-RING

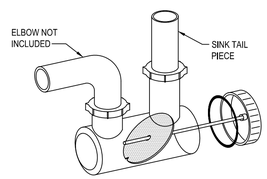

TO INSTALL
1. PLACE SLIP NUT AND WASHER OVER 1-1/2" TAIL PIECE.
2. PLACE SLIP NUT OVER FLANGE OF ELBOW PIPE (NOT INCLUDED).
3. INSTALL HAIR TRAP AND TIGHTEN SLIP NUTS.
4. RUN WATER AND CHECK FOR LEAKS.

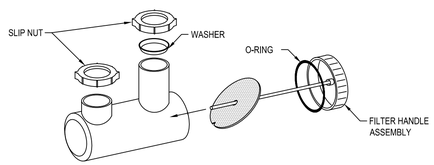

TO CLEAN
1. UNSCREW FILTER/HANDLE ASSEMBLY.
2. REMOVE ALL DEBRIS.
3. MAKE SURE O-RING IS IN POSITION IN HANDLE CAP.
4. REPLACE BY ALIGNING SLOT IN FILTER OVER THE GUIDE INSIDE HAIR TRAP AND TIGHTEN FIRMLY BY HAND.
5. RUN WATER AND CHECK FOR LEAKS.

CATCH-ALL HAIR TRAP DETAIL — 3 / P3.0
SCALE: N.T.S.

TYPICAL REQUIREMENTS:
(A) 3/4" HW WALL STOP AT +16 AFF
(B) 3/4" CW WALL STOP AT +16 AFF
(C) 2" SANITARY SEWER

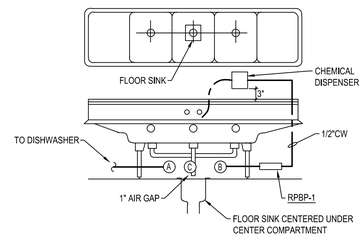

NOTES:
1. DRAINAGE PIPING SHALL BE COPPER DWV.
2. PLUMBING CONTRACTOR TO ADJUST ALL SINK LEGS TO MAKE SINK DECK LEVEL.
3. PLUMBING CONTRACTOR TO VERIFY THAT MANUAL WAREWASHING/DISHWASHING SINKS ACHIEVE A MINIMUM TEMPERATURE OF 120°F WITHIN 60 SECONDS.
4. CONTRACTOR TO VERIFY ALL PLUMBING ROUGH-IN LOCATIONS AND SUPPLIED SINK TRIM EQUIPMENT WITH OWNER'S CUT SHEETS PRIOR TO CONSTRUCTION.

3-COMP SINK DETAIL — 1 / P3.0
SCALE: N.T.S.

NOTE:
GENERAL CONTRACTOR TO CONTRACT WITH LANDLORD'S ROOFING CONTRACTOR FOR ALL WORK RELATED TO MAINTAINING ROOFING WARRANTIES.

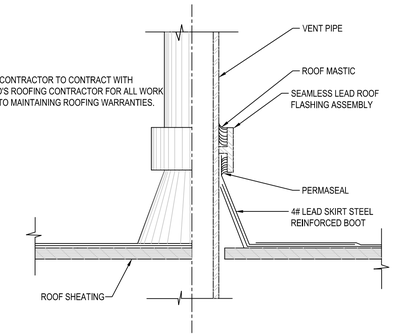

VENT THROUGH ROOF DETAIL — 2 / P3.0
SCALE: N.T.S.

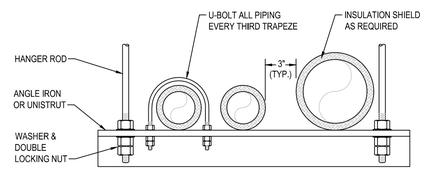

TRAPEZE HANGER DETAIL — 4 / P3.0
SCALE: N.T.S.

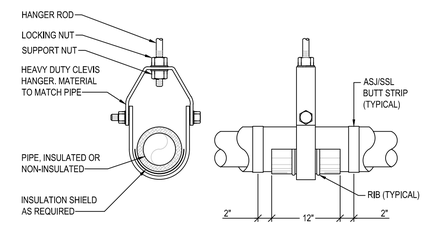

PIPE SUPPORT DETAIL — 5 / P3.0
SCALE: N.T.S.

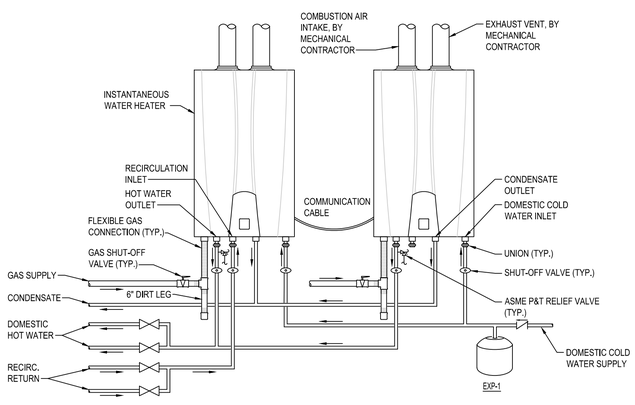

NOTES:
1.) DRAIN CONDENSATE FULL SIZE THROUGH A LEGAL AIR GAP.

2.) SEE SECTION 15200-2.3 ON SHEET P4.0 FOR PIPING INSULATION REQUIREMENTS.

3.) MOUNT WATER HEATERS AS HIGH AS POSSIBLE.

INSTANTANEOUS WATER HEATER DETAIL — 8 / P3.0
SCALE: N.T.S.

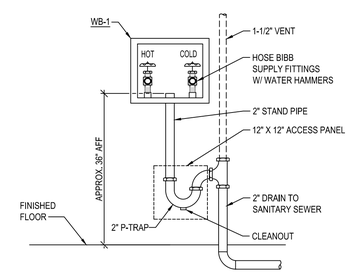

WASHER BOX CONNECTION — 6 / P3.0
SCALE: N.T.S.

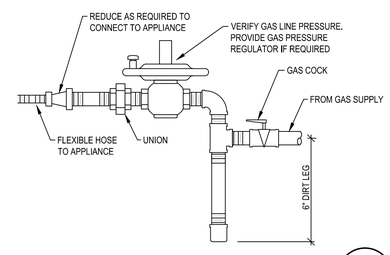

GAS APPLIANCE CONNECTION — 7 / P3.0
SCALE: N.T.S.

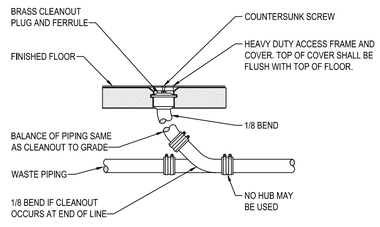

FLOOR CLEANOUT DETAIL — 9 / P3.0
SCALE: N.T.S.

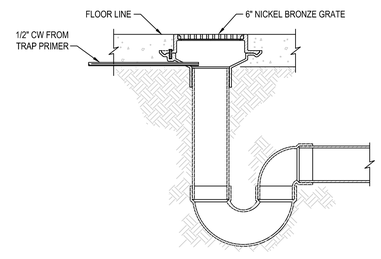

FLOOR DRAIN WITH TRAP PRIMER — 10 / P3.0
SCALE: N.T.S.

Engineering Consultants Incorporated
303 Federal Way Boise, ID 83705
Phone: 208.376.9820 Fax: 208.376.9822
www.ecIboise.com

FOR BIDDING PURPOSES ONLY - NOT FOR CONSTRUCTION

ARCHITECTS, INC.
17710 Detroit Avenue Lakewood, Ohio 44107
Phone (216) 521-5134 Fax (216) 521-4824
www.adaarchitects.cc

dogtopia

DOGTOPIA

2017 WOODLYNN AVENUE MAPLEWOOD, MN 55109

This document ("Instrument of Service") was prepared by ADA Architects, Inc. ("ADA") specifically for the referenced project and is not intended for any other use. ADA retains all common law, statutory and other reserved rights, including copyrights. This Instrument of Service shall not be used on other projects, for additions to this project or for completion of this project by others without ADA's prior written consent. Any unauthorized use of this Instrument of Service shall be at the User's sole risk and without liability to ADA. ADA makes no warranties, express or implied, of merchantability or of fitness for a particular purpose.

FRANCHISEE
LANG, BERT LLC

REVISIONS

#	DATE	TYPE
1		
2		
3		
4		
5		

PLUMBING DETAILS

DATE 03/23/20

JOB NO. 19492/18W09

P3.0
SHEET NO.

PLUMBING LEGEND

SYMBOLS	ABBREV.	DESCRIPTION
SS	SS	SANITARY WASTE BELOW FLOOR OR GRADE
GW	GW	GREASE WASTE BELOW FLOOR OR GRADE
CWV	CWV	COMBINATION WASTE AND VENT BELOW FLOOR OR GRADE
	V	VENT
	CW	COLD WATER
RO	RO	REVERSE OSMOSIS
	HW	HOT WATER
	HWR	HOT WATER RETURN
G	G	GAS
MPG	MPG	MEDIUM PRESSURE GAS
CD	CD	CONDENSATE DRAIN
SD	SD	STORM DRAIN
RWL	RWL	RAIN WATER LEADER
ODL	ODL	OVERFLOW DRAIN LEADER
	FD	FLOOR DRAIN
	FS	FLOOR SINK
	HD	HUB DRAIN
	RD	ROOF DRAIN
	VTR	VENT THROUGH ROOF
	HB	HOSE BIBB
	S.O.V.	SHUT OFF VALVE
	DCBP	DOUBLE CHECK BACKFLOW PROTECTION
	RPZ	REDUCE PRESSURE ZONE ASSEMBLY
	PRV	PRESSURE REDUCING VALVE
		PRESSURE REGULATOR
		CIRCULATING PUMP
	FCO/COTG	FLOOR CLEANOUT OR CLEANOUT TO GRADE
	WCO	WALL CLEANOUT
		PIPE UP
		PIPE DOWN
		PIPE TEE DOWN
	P.O.C.	POINT OF CONNECTION

(D)	DEMO	W.F.U.	WATER FIXTURE UNITS
(E)	EXISTING TO REMAIN		
(N)	NEW		
(R)	RELOCATE		
A.F.F.	ABOVE FINISHED FLOOR		
B.F.F.	BELOW FINISHED FLOOR		
I.E.	INVERT ELEVATION		
T& P	TEMPERATURE AND PRESSURE		

PLUMBING FIXTURE SCHEDULE

CONTRACTOR INSTALLED

FIXTURE #	DESCRIPTION	WASTE	VENT	HOT	COLD
BT-1	DOGTUB: TOM SMITH FIBERGLASS INC, MODEL LT101, WITH INTEGRAL HAIR-TRAP	2"	2"	1/2"	1/2"
CS-1	BALANCING VALVE : BELL & GOSSETT; MODEL CB-3/4.	-	-	3/4"HWR	
EW-1	EYEWASH STATION: GUARDIAN; MODEL G1814P. YELLOW ABS PLASTIC BOWL, G3600LF THERMOSTATIC MIXING VALVE SET TO 85°F.	INDIRECT	-	1/2"	1/2"
EXP-1	EXPANSION TANK: THERM-X-TROL; MODEL# ST-5. NON-ASME THERMAL EXPANSION TANK.	-	-	-	3/4"
FCO	FLOOR CLEANOUT: SIOUX CHIEF; MODEL 834 SERIES. NO-HUB CONNECTION, ROUND NICKEL-BRONZE STRAINER, MEDIUM DUTY.	SEE PLAN FOR SIZE	-	-	-
FD-1	FLOOR DRAIN: ZURN; MODEL Z415-BZ1-NH-P. REFER TO P2.0 FOR TRAP PRIMER CONNECTION LOCATIONS.	2"	2"	-	1/2"
FS-1	FLOOR SINK: ZURN; ZN-1900-K-2-32. CAST IRON FLOOR SINK WITH 6-1/2" DEEP ACID RESISTANT INTERIOR, ALUMINUM DOME STRAINER, 1/2 GRATE AND BOTTOM OUTLET TRAP.	3"	2"	-	-
HB-2	INTERIOR HOSE BIBB: WOODFORD; MODEL 24. MOUNT AT 54" A.F.F.	-	-	-	3/4"
LAV-1	LAVATORY: ZURN; MODEL Z5344. ANGLE STOPS AND RISER TAILPIECE, P-TRAP. PROVIDE WITH ZURN FAUCET; MODEL Z81101-XL. PROVIDE SAFETY COVERS ON HOT & COLD WATER AND P-TRAPS.	2"	2"	1/2"	1/2"
MS-2	MOP SINK: MUSTEE; MODEL 65M. 24"X36"X10". PROVIDE HB-2.	3"	2"	-	-
MXV-1	THERMOSTATIC MIXING VALVE: WATTS;MODEL LF1170. SET AT 110°F.	-	-	1/2"	1/2"
RPBP-1	BACKFLOW PREVENTER: WATTS; MODEL LF009QT-S. 1/2" REDUCED PRESSURE BACKFLOW ASSEMBLY, DRAIN THROUGH A LEGAL AIR GAP TO ADJACENT DRAIN.	-	-	-	1/2"
S-1	3-COMPARTMENT SINK: REGENCY; MODEL 600S31515215. PROVIDE WITH 12" SWING WALL-MOUNT FAUCET.	INDIRECT	-	3/4"	3/4"
TP-1	TRAP PRIMER: PPP; MODEL PR-500.	-	-	-	1/2"
WB-1	CLOTHESWASHER BOX: GUY GREY; MODEL BB-200.	2"	2"	3/4"	3/4"
WC-1	FLOOR-MOUNTED ADA WATER CLOSET: ZURN; MODEL Z5555-K. 1.28GAL. PER FLUSH. PROVIDE WITH FRONT OPEN SEAT.	3"	2"	-	1/2"
WCO	WALL CLEANOUT: SIOUX CHIEF; MODEL 873 SERIES.	SEE PLAN FOR SIZE			
WH-1	GAS FIRED INSTANTANEOUS WATER HEATER; NAVIEN: MODEL NPE-240A, 199,900 BTU. LEAD WATER HEATER TO BE SET UP AS EXTERNAL RECIRCULATION. SECOND WATER HEATER TO BE SET UP AS INTERNAL RECIRCULATION.	-	-	1"	1"

WATER CALCULATIONS

AVAILABLE WATER PRESSURE		50.0	PSI
PRESSURE LOSS ACROSS METER		4.0	PSI
BACKFLOW PREVENTER LOSS		13.0	PSI
PRESSURE REDUCING VALVE		0.0	PSI
HIGHEST FIXTURE ELEVATION		8.0	FT
STATIC PRESSURE LOSS	0.43 X 8.0 FT =	3.4	PSI
MINIMUM PRESSURE AT LAST FIXTURE		20.0	PSI
TOTAL PRESSURE AVAILABLE		9.6	PSI
DISTANCE TO LAST FIXTURE		150.0	FT
EQUIVALENT DISTANCE		225.0	FT
FLOW RATE		22.0	GPM
METER SIZE			1"
ALLOWABLE PRESSURE LOSS PER 100 FT	9.6 X 100.0 FT / 225.0 FT FT =	4.2	FT

FIXTURE	QTY.	W.F.U. / DEVICE	TOTAL W.F.U.
WATER CLOSET	1	2.5	2.5
DOG BATH	2	4.0	8.0
LAVATORY / HANDSINK	1	1.0	1.0
KITCHEN SINK	1	4.0	4.0
MOP SINK	3	3.0	9.0
HOSE BIBB	1	2.5	2.5
HOSE BIBB, EACH ADDITIONAL	3	1	3
CLOTHES WASHER	1	4.0	4.0
		TOTAL F.U. =	34.0
		FLOW REQUIRED =	22.0 GPM

GAS CALCULATION

EQUIP.	MBH
RTU-1	80
RTU-2	200
WH-1	200
WH-1	200
TOTAL	680

GAS DELIVERY PRESSURE = 7" W.C.

GENERAL NOTES:

A. ALL WORK AND MATERIALS SHALL CONFORM TO THE THE CODES LISTED IN THE BASIS OF DESIGN ON THIS SHEET AND ALL REQUIREMENTS OF THE AUTHORITIES HAVING JURISDICTION.

B. OBTAIN FIELD-APPROVAL FOR PLUMBING INSTALLATION FROM AUTHORITIES HAVING JURISDICTION.

C. NO WORK SHALL BE COVERED UP UNTIL IT HAS BEEN INSPECTED, TESTED AND APPROVED BY AUTHORITIES HAVING JURISDICTION.

D. VERIFY LOCATION, SIZE, DEPTH AND AVAILABILITY OF ALL UTILITIES INCLUDING SEWER, WATER AND GAS PRIOR TO START OF ANY WORK.

E. DRAWINGS AND SPECIFICATIONS GOVERN WHERE THEY EXCEED CODE REQUIREMENTS.

F. ALL PLUMBING FIXTURE LOCATIONS (WATER CLOSETS, LAVATORIES, ETC.) ARE DIAGRAMMATIC. CONTRACTOR SHALL REFER TO ARCHITECTURAL DRAWINGS FOR EXACT LOCATIONS.

G. ALL PLUMBING FIXTURES AND EQUIPMENT SHALL HAVE ISOLATION VALVES ON WATER SUPPLY LINES. VALVES SHALL BE FULL PORT LINE SIZED UNLESS NOTED OTHERWISE.

H. PROVIDE ACCESS DOORS TO ALL CONCEALED VALVES, STRAINERS, TRAP PRIMERS, WATER HAMMER ARRESTORS, ETC.

I. PROVIDE FLOOR DRAINS AND FLOOR SINKS WITH AN APPROVED AUTOMATIC TRAP PRIMER WHERE REQUIRED BY AUTHORITIES HAVING JURISDICTION.

J. CONTRACTOR SHALL PROVIDE CLEAN-OUTS WHERE SHOWN AND AS REQUIRED BY CODE. CLEAN-OUTS SHALL BE ACCESSIBLE. NO CLEAN-OUTS SHALL OCCUR UNDER OR BEHIND ANY FIXTURES.

K. UNDERGROUND PIPING SHALL BE LOCATED AWAY FROM BEARING FOOTINGS AND SHALL COMPLY WITH DETAILS ON STRUCTURAL DRAWINGS.

L. ALL PIPING IN FINISHED AREAS SHALL BE RUN CONCEALED UNLESS NOTED OTHERWISE ON DRAWINGS. EXPOSED PIPING, WHEN NOTED AS SUCH, SHALL BE RUN AS HIGH AS POSSIBLE AND TIGHT TO STRUCTURE.

M. ALL PIPING PENETRATING WALL, CEILING AND FLOOR SHALL BE ISOLATED FROM BUILDING STRUCTURES WITH RESILIENT SEALS.

N. ALL OPENINGS FOR PIPING THROUGH FIRE RATED ENCLOSURES SHALL BE CAULKED AS REQUIRED BY CODE TO MAINTAIN FIRE RATING.

O. COORDINATE ALL WORK WITH OTHER TRADES AND CONTRACTORS PRIOR TO START OF WORK.

P. ALL EQUIPMENT SHALL BE U.L LISTED.

Q. BRING TO THE ATTENTION OF THE OWNER'S REPRESENTATIVE ANY OMISSIONS OR CONFLICTS BETWEEN THE DRAWINGS AND SPECIFICATIONS BEFORE PROCEEDING WITH THE WORK.

R. CONTRACTOR TO PROVIDE ROUGH-INS AND FINAL CONNECTIONS FOR FIXTURES AND EQUIPMENT FURNISHED BY OTHERS.

S. NO VENT OUTLET SHALL TERMINATE CLOSER THAN FOUR FEET TO OR ONE FOOT ABOVE ANY DOOR, WINDOW OR GRAVITY AIR INTAKE. NOR CLOSER THAN TEN FEET TO OR LESS THAN THREE FEET ABOVE ANY FORCED OR MECHANICAL AIR INTAKE. VENT OUTLETS SHALL BE A MINIMUM OF TWO FEET FROM THE EDGE OF THE ROOF.

T. SANITARY WASTE VENTS SHALL RISE VERTICALLY TO A POINT NOT LESS THAN 6" IN HEIGHT ABOVE THE FLOOD LEVEL RIM OF THE FIXTURE BEFORE BEING CONNECTED TO ANY OTHER VENT.

U. FAUCET AND PLUMBING FIXTURES SHALL BE OF THE WATER CONSERVATION TYPE.

V. ALL PIPE SHALL BE TIGHTLY SECURED TO THE STRUCTURE AND SHALL BE SUPPORTED PER CODE REQUIREMENTS.

W. ACCESSIBLE FIXTURES SHALL BE INSTALLED IN ACCORDANCE WITH THE CODE AND AUTHORITIES HAVING JURISDICTION.

X. ALL POTABLE WATER OUTLETS WITH HOSE ATTACHMENTS, SUCH AS HOSE BIBBS AND MOP SINKS, SHALL BE PROVIDED WITH A BACKFLOW/ANTI-SIPHON VALVES.

Y. ALL SANITARY AND GREASE WASTE PIPING SHALL BE A MINIMUM 1/4" PER FOOT SLOPE, UNLESS OTHERWISE NOTED.

Z. DRAINAGE PIPING SERVING FIXTURES WHICH HAVE FLOOD WATER RIMS LOCATED BELOW THE ELEVATION OF THE NEXT UPSTREAM MANHOLE COVER OF THE SEWER SERVING SUCH DRAINAGE PIPING SHALL BE PROTECTED FROM BACKFLOW OF SEWAGE BY INSTALLING AN APPROVED BACKWATER VALVE.

AA. ALL DIMENSIONS SHOWN ARE IN INCHES UNLESS NOTED OTHERWISE.

AB. ALL ROOF PENETRATIONS SHALL BE SEALED WATER-TIGHT. ALL SEALING OF THE ROOF SHALL BE COMPLETED IN ACCORDANCE WITH ROOFING SYSTEM REQUIREMENTS AND ROOF MANUFACTURER'S WARRANTY. COORDINATE ALL NEW WORK WITH ROOFING CONTRACTOR.

AC. PLUMBER SHALL DISINFECT ALL NEW OR REPAIRED POTABLE WATER SYSTEMS PRIOR TO USE PER SPECIFICATIONS AND AUTHORITIES HAVING JURISDICTION.

AD. ALL WATER HEATERS SHALL BE SET AT 140°F, UNLESS NOTED OTHERWISE.

AE. THE PREMISE OWNER OR RESPONSIBLE PERSON SHALL HAVE THE BACKFLOW PREVENTION ASSEMBLY TESTED BY A CERTIFIED BACKFLOW ASSEMBLY TESTER AT THE TIME OF INSTALLATION.

AF. INSULATION SHALL BE PROVIDED AT ALL HOT WATER AND HOT WATER RECIRCULATION PIPING AND THE FIRST 5' OF COLD WATER PIPING FROM THE WATER HEATER.

AG. ALL WATER PIPING DROPS ALONG EXTERIOR WALLS SHALL BE ROUTED DOWN WARM SIDE OF INSULATION.

AH. RUN ALL WATER PIPING AS HIGH AS POSSIBLE IN CEILING SPACE OR TIGHT TO STRUCTURE UNLESS OTHERWISE NOTED.

AI. RUN ALL GAS PIPING ON ROOF UNLESS OTHERWISE NOTED. SUPPORT WITH MIRO BLOCK SUPPORTS.

AJ. ALL CONDENSATE PIPING SHALL SLOPE AT 1/8" PER FOOT MINIMUM.

BASIS OF DESIGN

CODES

2015 MINNESOTA BUILDING CODE

2015 MINNESOTA PLUMBING CODE

2012 INTERNATIONAL MECHANICAL CODE (IMC)

2015 MINNESOTA ENERGY CODE

Engineering Consultants Incorporated
303 Federal Way Boise, ID 83705
Phone: 208.376.9820 Fax: 208.376.9822
www.eciboise.com

FOR BIDDING PURPOSES ONLY - NOT FOR CONSTRUCTION

ADA ARCHITECTS, INC.
17710 Detroit Avenue Lakewood, Ohio 44107
Phone (216) 521-5134 Fax (216) 521-4824
www.adaarchitects.cc

dogtopia

DOGTOPIA

MAPLEWOOD, MN 55109

2017 WOODLYNN AVENUE

This document ("Instrument of Service") was prepared by ADA Architects, Inc. ("ADA") specifically for the referenced project and is not intended for any other use. ADA retains all common law, statutory and other reserved rights, including copyrights. This Instrument of Service shall not be used on other projects, for additions to this project or for completion of this project by others without ADA's prior written consent. Any unauthorized use of this Instrument of Service shall be at the User's sole risk and without liability to ADA. ADA makes no warranties, express or implied, of merchantability or of fitness for a particular purpose.

FRANCHISEE

LANG, BERT LLC

REVISIONS

#	DATE	TYPE
1		
2		
3		
4		
5		

PLUMBING SCHEDULES

DATE 03/23/20

JOB NO. 19492/18W09

P3.1

SHEET NO.

PLUMBING SPECIFICATIONS

SECTION 15100 - MECHANICAL GENERAL PROVISIONS

PART 1 - GENERAL

1.1 SCOPE
A. General:
1. The Bidding Requirements, Contract Requirements, and the General Requirements (Division 1) of these specifications shall govern all parts of the work.
B. Work Included:
1. Install work in accordance with these specifications and the accompanying plans. Furnish all labor, material, and equipment together with all incidental items not specifically shown or specified which are required by good practice to provide the complete mechanical systems as described.
C. Coordination and Site Visits:
1. This section of the work requires examination of and reference to all architectural, structural, utility, and electrical drawings for construction conditions that may affect the work. Inspect the building site and existing facilities for verification of existing conditions. Base all measurements from established benchmarks. Any discrepancy between actual measurements and those indicated, which prevents following good practices or the intent of the drawings and specifications, shall be reported to the Architect/Engineer, and work halted until instructions are received from the Architect/Engineer.

1.2 CODES, PERMITS, FEES
A. Install all work in accordance with applicable codes and standards. Obtain all required permits; pay all required fees including utility connections or extensions, in connection with this portion of the construction. Obtain all required certificates of inspection for the work.

PART 2 - PRODUCTS

2.1 MATERIALS AND WORKMANSHIP
A. Materials:
1. All materials and equipment shall be of first quality, new, full size and weight, standard in every respect, and suitable for the space required. Use the same manufacturer for products of similar class or service, such as valves, pumps, controls, and air handlers. Protect all materials against loss, theft, or damage before and after installation.
2. Furnish equipment that will operate under all conditions of load without any sound or vibration that is objectionable in the opinion of the Architect/Engineer. Vibration or noise considered objectionable will be corrected by the Subcontractor at his expense.
3. Furnish and install all necessary foundations, supports, pads, bases, and piers required for all materials and equipment furnished under this contract.
4. Provide all required fire stopping at piping and duct penetrations of fire rated walls, floors, ceilings, and roofs.
B. Workmanship:
1. All materials and equipment shall be installed in a neat and workmanlike manner by competent specialists for each sub trade. Work shall be installed to the satisfaction of the Architect/Engineer with unsatisfactory work removed and reinstalled to his satisfaction at no extra cost to the Owner.
2. Provide all cutting and patching necessary to install the work specified in this section. Patching shall match adjacent surfaces. No structural members shall be cut without the approval of the Architect/Engineer. Provide all sleeves and inserts required before the floors and walls are built.
3. Locate all equipment that must be serviced in fully accessible positions. Provide clearance for removal of replacement parts and components, and with necessary couplings or flanges to remove the component for maintenance.

2.2 SUBMITTALS AND SUBSTITUTIONS
A. Prebid Approval:
1. Manufacturer's trade names and catalog numbers stated herein are intended to indicate the quality of equipment or materials desired. All manufacturers not specifically listed require prior approval. Submit catalog data, including specifications, of the proposed equipment to the Architect/Engineer for his approval at least 10 calendar days prior to bid opening. Notice of such approvals will be published in an addendum. Approval of listed alternate equipment manufacturers is for bidding only. Final approval is to be based on requirements of the plans and specifications.
B. Submittals:
1. Within thirty days after award of this contract, provide a complete list of all materials and equipment proposed for this project. List shall contain make, type, manufacturer's name, and trade designation of all materials and equipment. Submittal shall also include manufacturer's complete specification for each item, including capacities, ratings, etc., and dimensions as required to check space requirements. Provide six physical copies or a digital copy of all submittals. The scheduled equipment is the basis of design for capacity, weights, physical size, etc. Alternate manufacturers shall not exceed the weight or physical size. Any changes to the Architectural, Structural, Mechanical, Electrical, and Control systems due to alternate manufactures shall be the responsibility of the Contractor and Supplier.
2. Approval of submittals shall not relieve the contractor from responsibility for deviations from the plans or specifications, unless he has, in writing, called the Architect's /Engineer's attention to deviations at the time of submission, and obtained his written approval. Approval of submittals does not relieve the contractor from responsibility for errors in shop drawings or literature.
C. Equipment Requiring Submittals:
1. Plumbing Fixtures and Trim
2. Cast Iron Soil Pipe

PART 3 - EXECUTION

3.1 ACCESSIBILITY & SAFETY
A. Accessibility:
1. All equipment which must be serviced or operated shall be located in fully accessible position. Minor changes from the drawings may be made to allow for better accessibility. All changes shall be approved prior to actual installation.
2. Access panels shall be provided if required for accessibility. Subcontractor shall furnish the required panels to the General Contractor and the required location for all access panels. Panels shall be installed by the General Contractor.
B. Safety:
1. Subcontractor shall provide guards for all belt drives and rotating machinery. No water piping shall run immediately over or within a 3-foot plan view clearance of any electrical panel or motor starter. Where piping must be located within these zones, install piping inside a conduit to prevent water access to electrical equipment.

3.2 COORDINATION
A. Coordinate all work with the various trades involved to provide a complete and satisfactory installation. The exact details of piping, ductwork, and equipment are not shown. No additional compensation will be made for offsets or relocation required in coordination with other trades.
B. Alterations required due to improper supervision by the subcontractor shall be made at no extra cost, to the satisfaction of the Architect/Engineer.

3.3 ELECTRICAL
A. Electric motors required for equipment specified in this section shall be provided and installed by this Subcontractor. Motor starters, relays, pilot lights, etc., are, in general, to be furnished and installed by the Electrical Contractor.
B. Starters, relays, controls, disconnects, etc., which are factory assembled into or provided with (per schedules) packaged equipment shall be furnished by the Mechanical Contractor under this section of the specifications.
C. All motors shall be provided with adequate starting and protective equipment as specified or required. Motor capacity shall be sufficient to operate driven device under all conditions of operation and load without overload. Minimum horsepower shall be as specified.

3.4 EXCAVATION & BACKFILL
A. Excavate trenches required for underground piping to proper elevation and grade. Provide trenches with solid bottoms to allow support of piping along entire length with excavation at bells as required for jointing and inspection. Provide repairing of finished surfaces, and all required shoring, bracing, pumping, and protection for safety of persons and property. Observe all Local or State Safety Codes. Verify that elevations of existing utilities will allow for proper grading of piping connecting to existing utilities.
B. Excavation and Backfill shall be in accordance with the requirements of Division 2 - Sitework, of these specifications.

3.5 IDENTIFICATION & CODING
A. Painting:
1. All painting of mechanical equipment, accessories, ductwork, and piping shall be furnished and applied under the Architectural section of these specifications. All painting shall be completed before any identification markings are applied.
B. Equipment:
1. Identify all equipment with a black Formica label, with white reveal when engraved. Lettering to be 3/16-inch high minimum. In general, identify equipment as to area served in addition to title and code number of the equipment as taken from the plans.
C. Piping:
1. Identify all piping as to the service of the pipe and the direction of flow. The letters shall be ½-inch high on piping 1-1/4 inches or smaller, 3/4 inch high on piping 1-1/2 to two inches, 1-1/4 inches high on piping up to six inches, and 2-1/2 inches high on 8 inch piping or larger. Flow arrows shall be at least six inches long. The letters and flow arrows shall be made by precut stencils or oil base paint, one inch high and black, or factory fabricated plastic pipe markers. Piping shall be identified at 25 foot maximum intervals, on long continuous lines; adjacent to each item of equipment; on each riser and junction, and on both sides of all wall and floor penetrations. Underground piping shall be identified with bright colored continuously printed plastic tape of not less than 6" wide by 4 mil thick, manufactured for direct burial service. Install directly above all buried pipe, 6 to 8 inches below finished grade. All piping shall be labeled per the International Plumbing Code, latest edition.
D. Valves:
1. Regardless of size, all valves shall be tagged with a numbered brass tag, 1-1/2 inches by 3 inches minimum in size and 0.051 inch thick. A valve chart indicating valve tag number, location, service, and normal position shall be mounted in a suitable framed and glassed cover in the main mechanical room or as directed. Valve chart shall be duplicated in the Maintenance and Operations Manual.

3.6 TESTING
A. Piping:
1. All plumbing piping (drainage, water, gas) shall be tested in accordance with the requirements of the International Plumbing Code, latest edition. Other piping systems shall be tested hydrostatically, to 1.5 times the operating pressure, but not less than 100 psi, for a minimum period of two hours. If the test pressure falls more than 5 percent during the test period, the leak shall be located, repaired, and the test repeated.
2. Piping shall be tested before insulation has been installed. Delicate control mechanisms shall be removed during tests to prevent shock damage. The use of chemicals or compounds to stop leaks shall not be permitted.
3. A test report shall be submitted for each piping system test. Test report forms are part of Specifications Section 15200, or are available from the Engineer.
4. Smoke Test: A smoke test shall be performed on the waste and vent system before building occupancy. After all fixtures are permanently connected and traps are filled with water, fill entire drainage and vent system with smoke under pressure of 1.3 kPa (1 inch of water) with a smoke machine. If leaks are detected, they shall be repaired and the smoke test shall be performed again until no leaks are found.
B. Systems:
1. All systems, including heating, ventilating, air conditioning, and plumbing systems, shall be tested at the completion of the building to establish that the systems operate as specified and required. Testing shall be performed after air and water balancing is completed.
2. All controls shall be calibrated accurately and all equipment shall be adjusted for satisfactory operation. Excessive vibration or noise from any system shall be corrected.
3. The air conditioning system shall be tested for satisfactory operation when the outside air temperature reaches 60°F or warmer. All other systems shall be tested at building completion. All tests shall be performed in the presence of the Architect/Engineer or his representative.

3.8 CLEANING & ADJUSTING
A. Thoroughly clean all parts of the system at the completion of the work. Flush all water circulating systems with fresh water and then drain. Clean all strainers and refill system. Install new, clean air filters in all systems. Adjust all devices for proper operation and lubricate all equipment as required. Repaint any painted surface that has been damaged.
B. All potable water systems shall be flushed and disinfected after tests are completed. Disinfection shall be in accordance with local municipal and State Plumbing Inspector's criteria. In lieu of such criteria, the following procedure shall be followed for disinfection:
1. Completely flush system. Add alkali or acid (hydrochloric) to bring water ph level to between 7.4 and 7.6.
2. Inject chlorine (liquid, powder, tablet, or gas) throughout the system to obtain 50 to 80 mg/L residual.
3. Bleed water from outlets to ensure distribution, and test for residual at a minimum of 15 percent of the outlets.
4. Maintain disinfection in system for 24 hours.
5. If final disinfectant residual tests less than 25 mg/L, repeat treatment.
6. Flush disinfectant from system until residual is equal to that of incoming water, or 1.0 mg/L.
7. Take samples no sooner than 24 hours after flushing, from 10 percent of the outlets and the incoming water.

3.9 PROJECT CLOSEOUT
A. Operations & Maintenance (O & M) Manual: The Contractor shall provide two copies of an operations and maintenance manual at least thirty days prior to completion of work. The manual shall be of the three ring binder type, entitled "Operations and Maintenance Manual", with the job name and year of completion also included. The manual shall include, as a minimum:
1. Maintenance instructions for all equipment, including lubrication requirements.
2. Equipment suppliers names, addresses, and telephone numbers.
3. Equipment catalog cuts, ratings tables, model numbers, serial numbers, and accessories.
4. Parts numbers for all replaceable parts.
5. Valve tagging chart as hereinbefore specified.
6. Filter chart listing unit callout, size of filters, and quantity of filters.
7. Guarantee letter as specified below.
8. Any additional information required to enable the Owner to properly maintain the building mechanical system.
9. After approval of the Operations and Maintenance Manual by the Architect/Engineer, the Contractor shall furnish two copies of the manual to the Owner.
B. As-Built Drawings:
1. Provide two sets of red-lined mechanical drawings showing the work as it was actually installed. The drawings shall indicate all departures from the contract drawings, and shall locate all underground utility lines with dimensions from established building lines. Make all notations neat and legible, with red indelible pencil. At the completion of the work, these as-built drawings shall be signed and dated by the Mechanical Contractor, and returned to the Architect/Engineer.
D. Guarantee:
1. All work furnished under this section shall be guaranteed in writing to be free from defective work or materials for a period of one year after acceptance of the contract. All repairs or replacements because of defective materials or workmanship or noncompliance with code shall be provided without additional cost to the Owner. Contractor shall furnish a letter indicating above guarantee with space for date of acceptance and expiration of guarantee. Letter shall be included in O & M Manual.

END OF SECTION 15100

SECTION 15200 - PLUMBING

PART 1 - GENERAL

1.1 SCOPE
A. This section covers the work necessary for the plumbing system, complete. The Mechanical General Provisions, Section 15100, are to be included as a part of this section of the specifications.

1.2 CODES
A. The plumbing system shall be installed in accordance with the International Plumbing Code, latest edition, International Fuel Gas Code, latest edition; and all local and State Codes.

1.3 FIXTURES & EQUIPMENT
A. General:
1. Plumbing fixtures and equipment shall be as listed on the drawings. In addition to those specifically listed, the following manufacturers are approved for bidding only. All other manufacturers require prior approval. Final approval for installation is based on submittal data furnished:
a. Tank Type Water Closets: American Standard, Kohler, Eljer, Mansfield, Toto, Zurn, Gerber, and Sloan.
b. Flush Valve Water Closets: American Standard, Kohler, Eljer, Mansfield, Toto, Zurn, Briggs, Gerber, and Sloan.
c. Urinals: American Standard, Kohler, Eljer, Mansfield, Toto, Zurn, Briggs, Sloan, and Gerber.
d. Vitreous China Sinks: American Standard, Kohler, Eljer, Zurn, Mansfield, Crane, Gerber, and Sloan.
e. Stainless Steel Sinks: Elkay, Just.
f. Faucets: American Standard, Kohler, Chicago Faucets, Delta, Moen, Geberit, Gerber, CHG Encore Saniguard, Zurn Aquaspec, Symmonds.
g. Valves and Trim: T&S Brass, Dearborn Brass, Brasscraft, Proflo.
h. Flush Valves: Sloan, Delany, Delta and Zurn. Moen (sensor-operated only).
i. Carriers and Drainage Products: Jay R. Smith, Josam (Blucher-Josam), Zurn, Wade, Watts, MIFAB, Sioux Chief, Neenah Foundry.
j. Toilet Seats: Bemis, Church, Comfort Seats, Beneke, Zurn, American Standard, Kohler.
k. Mixing Valves: Symmonds, Leonard, Powers, Watts, Wilkins.
l. Fiberglass/ Acrylic Fixtures: Best Bath, Intersan, MAXX, Fiat, Aquatic, Aquaglass.
m. Drinking Fountains/ Electric Water Coolers: Haws, Acorn Aqua, Oasis, Stern Williams, Halsey Taylor.
n. Safety Fixtures and Safety Mixing Valves: Haws, Gaurdian, Acorn, Bradley, Chicago Faucets, Encon.
o. Terrazo/ Acrylic Washfountains: Bradley, Acorn, Intersan.
p. Service Sinks: Fiat, Acorn, Stern Williams.
q. Water Heaters: Rheem, A.O. Smith, PVI, State, Bradford-White, American.
r. Backflow Preventers: Watts, Conbraco, Apollo, Wilkins.
s. Hose Bibbs: Josam, Zurn, JR Smith
2. Plumbing Fixture Standards: All plumbing fixtures shall meet or exceed the following standards:
a. ANSI A112.6.1 - Supports for Off-the Floor Plumbing Fixtures for Public Use.
b. ANSI A112.18.1 - Finished and Rough Brass Plumbing Fixture Fittings.
c. ANSI A112.19.1 - Enameled Cast Iron Plumbing Fixtures.
d. ANSI A112.19.2 - Vitreous China Plumbing Fixtures.
e. ANSI A112.19.3 - Stainless Steel Plumbing Fixtures (Designed for Residential Use).
f. ANSI A112.19.4 - Porcelain Enameled Formed Steel Plumbing Fixtures.
g. ANSI A112.19.5 - Trim for Water-Closet Bowls, Tanks, and Urinals.
h. ANSI Z124.1 - Gel-Coated Glass-Fiber Reinforced Polyester Resin Bathtub Units.
i. ANSI Z124.2 - Gel-Coated Glass-Fiber Reinforced Polyester Resin Shower Receptor and Shower Stall Units.
j. ANSI Z358.1 - Emergency Eye Wash and Shower Equipment.
k. ARI 1010 - Drinking Fountains and Self-Contained Mechanically Refrigerated Drinking Water Coolers.
l. AWSI/ASSE 1001 - Atmospheric Vacuum Breaker
m. ANSI/ASSE 1012 - Backflow Preventers with Immediate Atmospheric Vent.
n. ANSI/ASSE 1011 - Hose Connection Vacuum Breakers.
o. ANSI/ASSE 1013 - Backflow Preventers, Reduced Pressure Principle.
p. ANSI/ASSE 1015 - Backflow Preventers, Double Check Principle
q. ANSI/ASSE 1019 - Wall Hydrants, Frost Proof Automatic Draining Anti-Backflow Types.
r. AWSI/ASSE 1020 - Pressure Vacuum Breaker
s. ANSI/ASSE - 1-52 - Hose Connection, Double Check
t. ANSI A112.21.1 - Floor Drains.
u. ANSI A112.21.2 - Roof Drains.
v. ANSI A112.26.1 - Water Hammer Arresters.
w. PDI WH-201 - Water Hammer Arresters.
x. ANSI/AWWA C606 - Grooved and Shouldered Joints

PART 2 - PRODUCTS

2.1 PLUMBING FIXTURES & TRIM
A. All plumbing fixtures shall be provided complete with all required trim for a complete and operational system. All exposed trim shall be chrome plated. All piping penetrations through finished walls shall be provided with chrome escutcheons. All plumbing fixtures shall be caulked and sealed to surrounding surfaces. All sink traps shall be provided with a clean out plug in the bottom of the trap. Interior exposed pipe, valves, and fixture trim, including trim behind all casework doors, shall be chrome plated. All fixture stop valves shall be quarter-turn brass ball type.

2.2 PIPING & FITTINGS
A. General:
1. Underground sanitary sewer and storm drain lines shall be installed at 1/4" per foot slope, unless otherwise indicated. If such slope is not possible due to existing inverts, approval shall be obtained from the Architect/Engineer and the authority having jurisdiction before any piping is installed at a lesser slope.
2. Connections between piping of dissimilar materials shall be made with dielectric waterway fittings or unions.
3. Provide standard manufactured water hammer arresters at all flush valves. Size and locate per manufacturers recommendations. Provide access panels for access to all water hammer arresters.
B. Domestic Hot and Cold Water:
1. Piping inside building above slab or above grade in crawl space shall be ASTM B88, Type "L", hard drawn copper, Fittings shall be ANSI/ASME B16.23 cast brass, or ANSI/ASME B16.29 wrought copper. Joints shall be ANSI/ASTM B32 solder, Grade 95-5, lead free.
2. Piping underground within 5 feet of the building line or below floor slab, smaller than 4 inches, shall be ASTM B88, Type "K", hard drawn or soft annealed copper. Fittings shall be ANSI/ASME B16.29 wrought copper. Joints shall be ANSI/ASTM B32 solder, Grade 95-5, lead free. No joints shall be installed beneath concrete floor slabs. Underground copper piping shall be provided with a polyethylene jacket, ANSI/AWWA C105, or shall be wrapped with double layer, half-lapped, 10 mil polyethylene tape.
a. Trap Primer Piping (below floor or concealed only) - 1/2" type K hard drawn copper, wrapped as indicated above.
3. Piping underground beyond 5 feet from building line shall be Schedule 40 PVC, ASTM D1785 or D2241. Fittings shall be PVC, ANSI/ASTM D2466. Joints shall be solvent weld, ASTM D2855, or gasketed, ASTM F477. Piping shall be rated for not less than 150 psig pressure.
C. Sanitary Sewer and Vent:
1. Piping and fittings shall be Schedule 40 PVC-DWV (cellular core), per ASTM F1488 and ASTM F891, solvent welded per solvent manufacturers instructions, or ABS Schedule 40 piping and fittings per either ASTM D2661 or ASTM F628 with solvent cement conforming to ASTM D2235. All sewer risers (2 story or more) shall be service weight cast iron, no-hub or single-hub, ASTM A74. All piping penetrations through fire rated walls, floors, or ceilings, and all piping located above ceilings used as return air plenums shall also be cast iron or galvanized steel, ASTM A53. Underground PVC-DWV piping shall be installed per ASTM D-2321.
2. All sanitary waste and grease piping for commercial type kitchens shall be cast iron CISPI 201, ASTM888 hubless, with cast iron fittings. Joints shall be neoprene gaskets and stainless steel clamp-and-sheild assemblies and shall conform to CISP 310 and be certified by NSF for compliance. Pipe and fittings shall be listed by NSF International and manufactured by AB&I, Charlotte, Tyler, NewAge Casting, Star, or receive prior approval. Cast iron piping shall extend downstream from the kitchen to the main building waste line, and / or, grease interceptor.
3. Piping and fittings beyond 5 feet from the building line shall be PVC, ASTM D3033 or D3034, SDR 35, Joints shall be ASTM F477 with elastomeric gaskets. Underground piping shall be installed per ASTM D-2321.
4. All 90 degree waste line elbows shall be per the latest issue of the International Plumbing Code.
5. All exposed vent piping located in occupied areas or rooms, is to be cast iron with cast iron fittings.
6. Cleanouts shall be provided at each horizontal drainage pipe at its upper terminal, and each run of piping which is more than 100 feet, and shall be provided for each 100 feet developed length, or fraction thereof of such piping. An additional clean out shall be provided for each aggregate horizontal change of direction exceeding one hundred thirty-five degrees, per applicable plumbing code. This shall be provided regardless of what is shown on the drawings.
7. All floor drains, floor sinks, and hub drains shall be installed with a trap primer. Reference the Plumbing Fixture Schedule, on the plans, for type.
8. All vents through roof (VTR's) shall be extended at least 1 foot above the roof surface, or to the top of the closest adjacent parapet wall, whichever is greatest.
D. Condensate Drain Piping:
1. Exterior to building, or located in plenum: Piping shall be Type L hard drawn copper, ASTM B88 with solder joints. Copper piping shall not be used on 90% condensing type equipment.
2. Interior: Piping shall by Type L hard drawn copper, ASTM B88, with solder joints, grade 95TA, or shall be Schedule 40 PVC. Copper piping shall not be used on 90% condensing type equipment. Provide a neoprene or rubber gasket at all copper piping support hangers to inhibit corrosion.
E. Hanger and Supports:
1. Pipe hangers shall be provided to adequately support all piping systems. Hangers shall be vertically adjustable to provide for proper pitch and drainage. Hangers shall allow for expansion and contraction of the piping system. Reference "General Regulations" of the latest edition of the International Plumbing Code.
2. Hangers for pipe sizes 1/2 to 6 inches shall be adjustable clevis type, or unistrut saddles with all-thread hanger rod.
3. Hangers for hot pipe, sizes 6 inches and over shall be adjustable steel yoke, cast iron roll, double hanger type.
4. Vertical pipes shall be supported with steel riser clamps. Spacing interval requirements per "General Regulations" of the latest edition of the International Plumbing Code.
5. All insulated piping shall be provided with minimum 18 gauge galvanized insulation shields, 12 inches long, and oversized hangers. Pipe sizes 2 inches and over shall also be provided with 12 inch long calcium silicate insulating blocks between the piping and the galvanized insulation shield.
6. Hanger rod sizing and spacing for pipe shall be as follows:

Pipe Size	Min. Rod Diameter	Maximum Spacing
To 1-1/4 inches	3/8 inch	6.5 feet
To 2 inches	3/8 inch	10 feet
To 3 inches	1/2 inch	10 feet
To 6 inches	5/8 inch	10 feet
8 to 12 inches	7/8 inch	12 feet
PVC & ABS (all sizes)	3/8 inch	4 feet
Cast Iron No-Hub	5/8 inch	5 feet and at joints

7. Provide hangers within 12 inches of each horizontal elbow.
8. Provide hangers with minimum 1-1/2 inches vertical adjustment.

2.3 INSULATION
A. General:
1. All insulation shall have composite fire and smoke hazard ratings, as tested by ASTM E-84, NFPA 255, and UL 723, not exceeding:

Flame Spread	25
Smoke Developed	50

B. Piping:
1. All domestic, potable & non-potable, hot and cold water lines and rain drains shall be insulated with preformed insulation.
a. Fiberglass insulation with a vapor barrier jacket. Insulation shall have a conductivity not exceeding 0.28 Btu-inch/hour-sq. ft.-°F. Laps and butt joints shall be sealed with pressure sensitive joint sealing tape of the same finish as the insulation jacket to provide a continuous vapor seal. Fittings and valves shall be insulated with PVC fitting covers and fiberglass insulation inserts, or with hydraulic setting insulating cement and four ounce canvas jacket with vapor barrier adhesive.
b. Alternate material for Cross-Linked Polyethylene Tubing (PEX). One piece preformed flexible elastomeric closed cell foam with built-in vapor barrier. Seal laps and butt joints with moisture resistant adhesive to provide a continuous vapor barrier. Insulation shall have a conductivity rating not exceeding 0.27 Btu-inch/hour-sq. ft.-°F.

Insulation thickness shall be as follows:

System	Pipe Sizes ½" and Above
Domestic Cold Water (pot. & non-pot.)	½"
Domestic Hot Water & Recirc. (pot. & non-pot.)	1"

2. Insulation shall be installed in strict accordance with manufacturer's instructions.
3. Insulation shall be continuous through penetrations.
4. All insulation shall be installed in a neat and workmanlike manner.

2.4 VALVES & STRAINERS
A. Ball Valves:
1. Valves 2-inches and smaller shall be cast brass body, chrome-plated brass ball, teflon seats, and lever handle, 600 psi CWP. Valves shall comply with MSS SP-110. Valves over 2-inches shall be ductile iron or cast steel body, chrome plated steel ball, teflon seats, and lever handle. Victaulic series 726, Anvil Gruvlok, Grinnell, or Shurjoint ball valves are acceptable if grooved piping is used.
B Strainers:
1. Strainers shall be cast steel body, Y-pattern, 20-mesh stainless screen.

PART 3 - EXECUTION

3.1 WORKMANSHIP
A. General:
1. Install all piping, fixtures, equipment, and accessories as shown, and in strict accordance with the plumbing laws, rules, and regulations of the State and/or City. All work shall be done in a neat and orderly fashion, and left in a condition satisfactory to the Architect/Engineer.
B. Piping:
1. All piping shall be run parallel or perpendicular to established building lines.
2. Install piping so as to allow for expansion. Piping supports must allow for lines to expand and contract freely. Where piping runs exceed 100 feet in length, an offset or expansion loops must be installed in the middle of the piping run.
3. Waste and vent piping occurring above floor slab shall be installed true and plumb. Extend vents at least 1 foot above roof, or to the top of the closest adjacent parapet wall, whichever is greater, and provide watertight flashing sleeves. Excavation and backfill shall be in accordance with Section 15100 of these specifications.
C. Fixtures:
1. Install fixtures true and plumb with building walls. Caulk all plumbing fixtures at joints along walls, countertops, and other intersecting surfaces. Locate fixtures as shown and per manufacturer's instructions. Furnish all required trim for fixtures to provide a complete and workable installation.

3.2 TESTS
A. General:
1. All piping, fixtures, and equipment shall be inspected and approved before concealing or covering. All work shall be tested as required by Section 15100 of these specifications, and shall be leak proof before inspection is requested. All tests shall be repeated if required by those making the inspection.
2. All potable water systems shall be flushed and disinfected in accordance with Section 15100 of these specifications. Following disinfection, system shall be flushed and water sampled to show compliance with requirements of public health authority having jurisdiction. If tested water does not meet requirements, disinfecting shall be repeated until water quality meets requirements.
B. Fixtures and Equipment:
1. Fill all plumbing fixtures with water and check for leaks or retarded flow. Repair as required. Adjust each piece of plumbing equipment as required to insure proper functioning. Leave all fixtures and equipment in first class operating condition.
2. The Plumbing Contractor is responsible for all backflow devices to be inspected by a certified backflow technician before the use of the building potable water system.

END OF PLUMBING SPECIFICATIONS

Engineering Consultants Incorporated
303 Federal Way Boise, ID 83705
Phone: 208.376.9820 Fax: 208.376.9822
www.eciboise.com

FOR BIDDING PURPOSES ONLY - NOT FOR CONSTRUCTION

ADA ARCHITECTS, INC.
17710 Detroit Avenue Lakewood, Ohio 44107
Phone (216) 521-5134 Fax (216) 521-4824
www.adaarchitects.cc

dogtopia

DOGTOPIA

2017 WOODLYNN AVENUE

MAPLEWOOD, MN 55109

This document ("Instrument of Service") was prepared by ADA Architects, Inc. ("ADA") specifically for the referenced project and is not intended for any other use. ADA retains all common law, statutory and other reserved rights, including copyrights. This Instrument of Service shall not be used on other projects, for additions to this project or for completion of this project by others without ADA's prior written consent. Any unauthorized use of this Instrument of Service shall be at the User's own risk and without liability to ADA. ADA makes no warranties, express or implied, of merchantability or of fitness for a particular purpose.

FRANCHISEE

LANG, BERT LLC

REVISIONS

#	DATE	TYPE
1		
2		
3		
4		
5		

PLUMBING SPECIFICATIONS

DATE 03/23/20

JOB NO. 19492/18W09

P4.0

SHEET NO.

FIRE SPRINKLER SPECIFICATIONS

SECTION 15400 - FIRE SPRINKLER

1.1 SCOPE
- A. General:
  1. The Mechanical General Provisions, Section 15100, are to be included as a part of this section of the specifications.
- B. Work Included:
  1. This section covers the work necessary to install a complete, satisfactory, and ready to operate wet pipe fire protection system for heated areas and dry pipe fire protection system for non-heated areas (areas subject to freezing). Hazard classification shall be as required by the State Fire Marshall, local City, IBC, IFC, and applicable NFPA Standards.
- C. Qualifications of Installer:
  1. All work shall be performed by a qualified, competent, licensed Fire Sprinkler Contractor who can furnish a verified list of satisfactory installations of this type and size, for a period of 5 years or more. Fire sprinkler contractor shall be licensed by the Georgia State Fire Marshal, and shall have in his employ an Engineering Technician (Level III), certified by NICET (National Institute for Certification in Engineering Technologies).
- D. System Responsibility:
  1. All work required for the fire protection system, including design and installation, shall be the responsibility of the Fire Sprinkler Contractor. Coordination with other trades is critical. Contractor shall coordinate his work with all ductwork, piping, electrical, etc., to ensure that all systems can be installed with a minimum of interference. Sprinkler heads should be located in the center of ceiling tiles wherever and whenever possible. Submittals which are required are only for the purpose of general coordination. Architect/Engineer assumes no responsibility or liability for the design of the system.
  2. All monitoring of valves not shown on the electrical drawings shall be within the scope of work for the fire sprinkler contractor. This shall include, but not be limited to, the following: All conduit and wiring as required to monitor post indicator valves, tamper switches, and any other devices required to be supervised by the fire alarm panel. The sprinkler contractor shall also provide all power, wiring and conduit required for a complete and operational dry-pipe system (if required), unless such electrical is shown on the electrical drawings.

1.2 CODES & STANDARDS
- A. The sprinkler system is to be installed in accordance with the applicable building codes, State and Local Fire Marshals requirements, and all applicable NFPA Standards.

PART 2 - PRODUCTS

2.1 SUBMITTALS - NICET Level III
- A. The Engineering Technician shall prepare and submit the following submittal data:
  1. Complete equipment list of all equipment to be installed, including manufacturer's name and catalog number.
  2. Layout drawing of a complete sprinkler system indicating relationship of all other overhead items, including ductwork, lights, and structural members.
  3. Complete details and sections as required to clearly define and clarify the design.
  4. Plot plan indicating location of all underground connections, piping, valves, and related items.
  5. Grooved joint couplings and fittings shall be shown on drawings and product submittals, and be specifically identified with the applicable style or series number.
  6. Sprinklers shall be referred to on drawings, submittals and other documentation, by the sprinkler identification or model number as specifically published in the appropriate agency listing or approval. Trade names or other abbreviated designations shall not be allowed.

2.2 MATERIALS & EQUIPMENT
- A. All materials shall be as specified below, or in accordance with applicable NFPA Standards:
  1. Piping shall be black steel, per NFPA 13 requirements. Threadable, thin wall piping will not be allowed. CPVC may be used for underground only.
  2. Fittings shall be 125 psi screwed cast or malleable iron for all threaded piping.
  3. Fittings shall be Victaulic FireLock®, Anvil Gruvlok, Grinnell, or Shurjoint fire protection products for all grooved or plain end piping. Couplings shall consist of two ductile iron housings conforming to ASTM A536, a pressure responsive elastomer gasket, and zink electroplated carbon steel bolts and nuts. Rigid type, or flexible type where necessary.
     - a. Rigid Type: Housings shall be cast with offsetting, angle-pattern bolt pads to provide system rigidity and support and hanging in accordance with NFPA 13. Tongue and recess rigid type couplings shall only be permitted if the contractor uses a torque wrench for installation. Required torque shall be in accordance with the manufacturer's recommendations. Contractor shall remove and replace any improperly installed joints. 1 1/4" and Larger. Standard rigid joint equal to Victaulic FireLock® Style 005 or Style 07 Zero-Flex®, or equal.
     - b. Flexible Type: Use in seismic areas where required by NFPA 13, Victaulic Style 75 or 77, or equal.
  4. Alarm valves or dry pipe valves shall be installed in system risers per local water purveyor requirements.
     - a. Alarm Check Valve: Black enamel coated ductile iron body, aluminum bronze clapper, stainless steel spring and shaft, brass seat, EPDM seal, and Nitrile seat o-rings with grooved end connections and waterflow detectors. Valve internal parts shall be replaceable without removing the valve from the installed position. Victaulic FireLock® Series 751.
     - b. Dry Pipe Valve: Low differential, latched clapper design, black enamel coated ductile iron body, aluminum bronze clapper, stainless steel spring and shaft, brass seat, EPDM diaphragm and seal, with Nitrile seat o-rings. Valve internal parts shall be replaceable without removing the valve from the installed position and be externally resettable. Valve shall be pre-trimmed with shut-off valve, 3-way ball valve, and actuator. Required air pressure is 13 psi with a maximum water pressure rating of 300 psi. Valve shall have grooved ends for vertical installation only.
  5. Butterfly control valves with supervisory tamper devices shall be installed for system control.
  6. All materials and equipment shall conform to the requirements of Underwriter Laboratories (UL) or Factory Mutual Global (FMG), and shall be so stamped.
  7. Pressure switches (water flow device) shall be installed in each system riser (dry pipe systems).
  8. Flow switches (water flow device) shall be installed in each system riser (wet pipe systems).
  9. Alarm Bell shall be 10-inch outdoor electric bell. Furnish for installation by the electrical contractor.
  10. Sway Bracing, both lateral and longitudinal, shall be required and shall be installed per applicable NFPA Standards.
  11. Fire Department Connection shall be provided for each system riser or manifold assembly. Install a 90 degree elbow with drain connection at each fire department connection to allow for system drainage to prevent freezing.
  12. Sprinkler heads in main entry type areas and main conference room type areas shall be concealed flush mounted style with white paintable covers. All other sprinkler heads shall be Reliable Designer Model F1, Victaulic Model V27(or equal), chrome, recessed with screw-on type escutcheon, below finished ceilings. Where surface mounted obstructions are installed, two-piece escutcheons and pendent sprinklers may be used, if required. Where sprinkler heads are subject to damage such as gymnasiums or mechanical lofts all sprinkler heads shall be provided with protective covers. Escutcheons shall be listed, supplied, and approved for use with the sprinkler by the sprinkler manufacturer. Where piping is exposed, install standard bronze upright or pendent sprinklers. Do not install sprinklers that have been dropped, damage, or show a visible loss of fluid. Never install sprinklers with cracked bulbs. Quick response dry sidewall sprinklers shall be used as required to comply with IBC requirements for exterior canopies.
  13. Provide 12 extra sprinkler heads mounted together in a suitable cabinet. Include spares of all types of sprinklers installed in the building.
  14. Hangers, drains, and Inspectors Test Connections shall be installed in accordance with applicable NFPA Standards.
  15. Test and Drain Valve: Globe design valve providing test port with ½" integral orifice and drain port in one unit. Bronze body with bronze and copper alloy internals, polycarbonate sight glasses, Nitrile o-rings and EPDM valve seats.
  16. Back flow prevention as required by the State and Local Fire Marshall.
  17. Post indicator valves as required by the State and Local Fire Marshall.
- B. Underground piping materials and installation shall comply with N.F.P.A. #24 and local water company specifications.

PART 3 - EXECUTION

3.1 INSPECTION
- A. Upon completion of the system, secure the inspection of the required authorities and perform such tests as may be required to demonstrate compliance with local and state standards. Upon acceptance of the system by the inspecting authority, inform the Architect/Engineer in writing, showing proof of acceptance. Submit all required test certificates to required authorities.

3.2 INSTALLATION
- A. Grooved joint piping systems shall be installed in accordance with the manufacturer's guidelines and recommendations. All grooved couplings, fittings, valves and specialties shall be supplied by a single manufacturer. The gasket style and elastomeric material (grade) shall be verified as suitable for the intended service as specified. Gaskets shall be supplied by grooved pipe manufacturer. Grooved end shall be clean and free from indentations, projections and roll marks in the area from pipe end to groove for proper gasket sealing. Contractor's field personnel shall be properly trained in the installation of the manufacturer's grooved piping products. A Factory trained representative shall periodically review the product installation. Contractor shall remove and replace any improperly installed products.
- B. The sprinkler bulb protector must remain in place until the sprinkler is completely installed and before the system is placed in service. Remove bulb protectors carefully by hand after installation. Do not use any tools to remove bulb protectors.

END OF FIRE SPRINKLER SPECIFICATIONS

Engineering Consultants Incorporated
303 Federal Way Boise, ID 83705
Phone: 208.376.9820 Fax: 208.376.9822
www.eciboise.com

FOR BIDDING PURPOSES ONLY - NOT FOR CONSTRUCTION

ADA ARCHITECTS, INC.
17710 Detroit Avenue Lakewood, Ohio 44107
Phone (216) 521-5134 Fax (216) 521-4824
www.adaarchitects.cc

dogtopia

DOGTOPIA

2017 WOODLYNN AVENUE

MAPLEWOOD, MN 55109

This document ("Instrument of Service") was prepared by ADA Architects, Inc. ("ADA") specifically for the referenced project and is not intended for any other use. ADA retains all common law, statutory and other reserved rights, including copyrights. This Instrument of Service shall not be used on other projects, for additions to this project, or for completion of this project by others without ADA's prior written consent. Any unauthorized use of this Instrument of Service shall be at the User's sole risk and without liability to ADA. ADA makes no warranties, express or implied, of merchantability or of fitness for a particular purpose.

FRANCHISEE

LANG, BERT LLC

REVISIONS

#	DATE	TYPE
1		
2		
3		
4		
5		

PLUMBING SPECIFICATIONS

DATE 03/23/20

JOB NO. 19492/18W09

P4.1

SHEET NO.

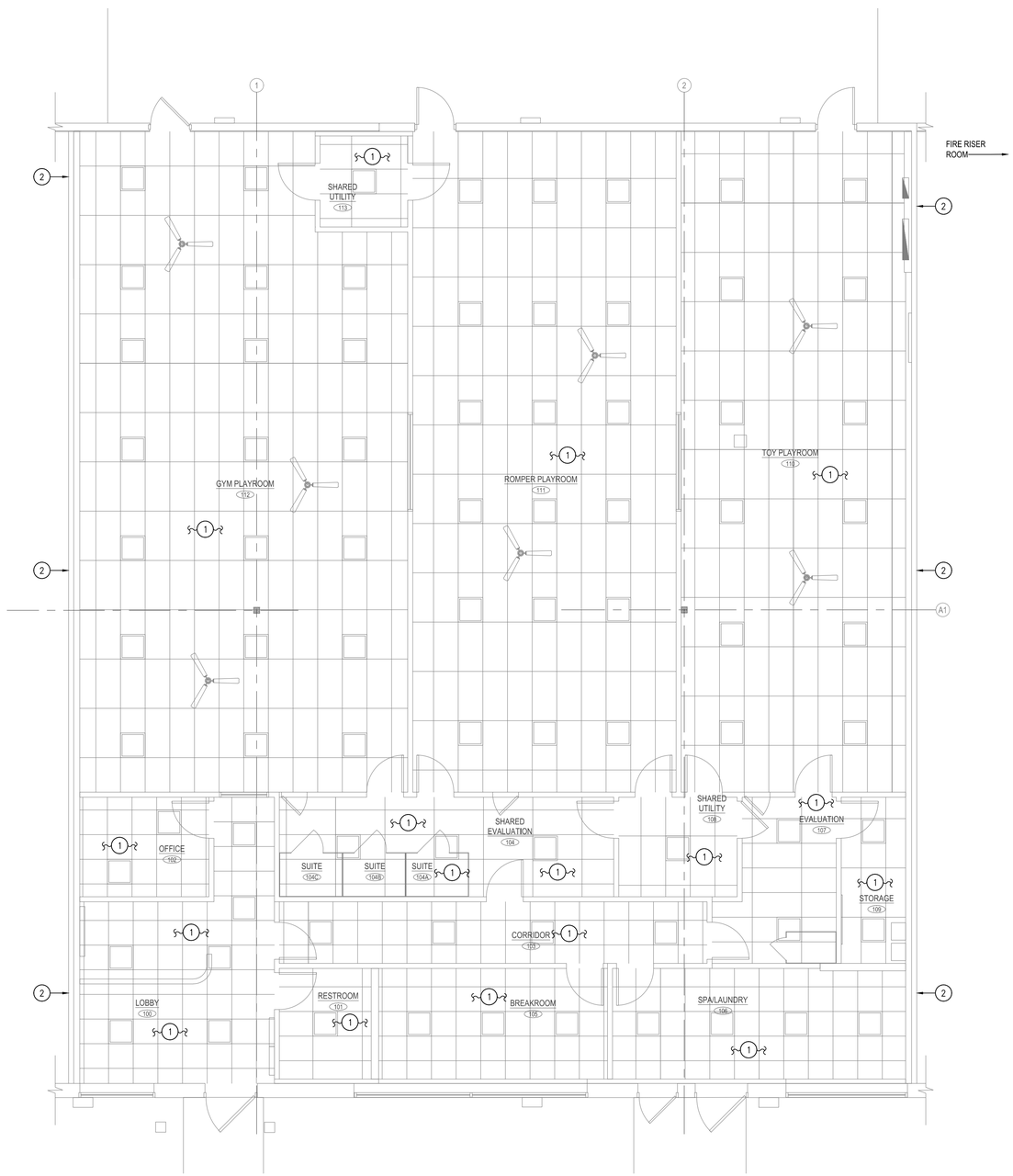

FIRE PROTECTION REFERENCE PLAN

SCALE 3/16" = 1'-0"

FIRE PROTECTION NOTES:

1. FIRE SPRINKLER SYSTEM DESIGN AND/OR LAYOUT MODIFICATION (IF APPLICABLE) SHALL BE PROVIDED BY THE DESIGNATED FIRE SPRINKLER SUBCONTRACTOR. ALL SUBMISSIONS TO THE FIRE MARSHAL AND BUILDING INSPECTOR FOR THE NECESSARY APPROVAL ARE THE RESPONSIBILITY OF THE FIRE SPRINKLER SUBCONTRACTOR. GENERAL CONTRACTOR, WHETHER WORKING FOR THE LANDLORD OR THE TENANT, TO VERIFY WITH THE LANDLORD OR THE LANDLORD'S CRITERIA IF FIRE SPRINKLER CONTRACTOR IS TO BE LANDLORD'S APPROVED OR DESIGNATED CONTRACTOR. APPROVALS BY LANDLORD, LANDLORD'S INSURANCE UNDERWRITER AND THE BUILDING INSPECTOR AND FIRE MARSHAL WILL BE REQUIRED.
2. THIS DRAWING IS FOR REFERENCE PURPOSES ONLY. THE FIRE SPRINKLER CONTRACTOR SHALL BE RESPONSIBLE FOR THE FULL DESIGN OF THE SPRINKLER SYSTEM AND ITS CONFORMANCE TO NFPA 13, IFC 2015 AND ALL LOCAL CODE REQUIREMENTS. THE FIRE PROTECTION CONTRACTOR SHALL INCLUDE ALL NEEDED OFFSETS, CHANGES IN DIRECTION, TRANSITIONS, ETC. NEEDED FOR A COMPLETE AND OPERATIONAL SYSTEM.
3. THE CONTRACTOR SHALL VISIT THE SITE AND BE FAMILIAR WITH SITE CONDITIONS. NO EQUIPMENT OR MATERIAL IS TO BE ORDERED OR FABRICATED PRIOR TO FIELD VERIFICATION OF ALL MEASUREMENTS, CLEARANCES, POTENTIAL CONFLICTS WITH EXISTING CONDITIONS.
4. PERFORM ALL WORK IN ACCORDANCE WITH THE RULES & REGULATIONS OF THE APPROPRIATE STATE AND LOCAL BUILDING CODES.
5. QUESTIONS REGARDING THESE DRAWINGS SHALL BE ADDRESSED TO THE ENGINEER PRIOR TO THE AWARDING OF THE CONTRACT.
6. FIRE SPRINKLER CONTRACTOR RESPONSIBLE TO OBTAIN A COPY OF THE SPECIFICATION ON SHEET P4.1 AND COMPLY WITH THE REQUIREMENTS THEREIN.
7. FIRE SPRINKLER CONTRACTOR SHALL REVIEW ARCHITECTURAL DRAWINGS FOR CEILING TYPES, HEIGHTS, COLOR, ELEVATIONS, SOFFITS, DISPLAY WINDOWS, ETC.
8. FIRE SPRINKLER CONTRACTOR SHALL SUBMIT FIRE SPRINKLER PLANS, HYDRAULIC CALCULATIONS, AND MATERIAL SUBMITTALS TO THE FIRE DEPARTMENT FOR SEPARATE PLAN CHECK.

KEY NOTES:

1. MODIFY SPRINKLERS AND PIPING OF FIRE PROTECTION SYSTEM AS NECESSARY TO ACCOMMODATE THE REMOVAL OF EXISTING CEILINGS, LIGHTS, AND WALLS (WHERE APPLICABLE) AND THE INSTALLATION OF NEW WALLS, CEILING GRIDS, AND LIGHTS PER NFPA 13 REQUIREMENTS.
2. MODIFY SPRINKLERS AND PIPING OF FIRE PROTECTION SYSTEM AT DEMISING WALL AS NECESSARY TO ACCOMMODATE THE REMOVAL OF EXISTING CEILINGS, LIGHTS, AND WALLS (WHERE APPLICABLE) AND THE INSTALLATION OF NEW WALLS, CEILING GRIDS, AND LIGHTS PER NFPA 13 REQUIREMENTS.

NOTE:
FIRE SPRINKLER CONTRACTOR SHALL ENSURE EXISTING FIRE SPRINKLER SYSTEM IS IN PROPER WORKING ORDER, INCLUDING BUT NOT LIMITED TO, BACKFLOW PREVENTION, FLOW AND TAMPER SWITCHES, AND ALARMS. THE FIRE SPRINKLER SYSTEM SHALL MEET NFPA-13 AND LOCAL FIRE DEPARTMENT REQUIREMENTS. PROVIDE 5 YEAR SYSTEM CERTIFICATION STARTING FROM DATE OF SUBSTANTIAL COMPLETION.

NOTE:
SPRINKLER CONTRACTOR SHALL RELOCATE ALL REQUIRED PIPING, ETC TO ALLOW HEIGHTS AS NOTED ON CEILING PLAN.

NOTE:
THE SPACE IS FULLY SPRINKLED. THERE IS AN EXISTING FIRE RISER ROOM LOCATED ON THE NORTH SIDE OF THE BUILDING COMPLEX.

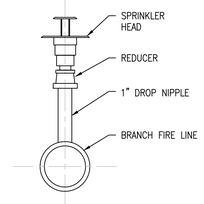

UPRIGHT SPRINKLER HEAD DETAIL (1 / FP1.0)

SCALE: N.T.S.

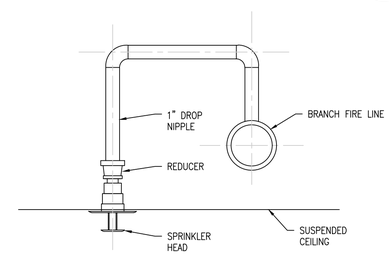

PENDANT SPRINKLER HEAD DETAIL (2 / FP1.0)

SCALE: N.T.S.

THIS SHEET FOR REFERENCE ONLY
DEFERRED SUBMITTAL

Engineering Consultants Incorporated
303 Federal Way Boise, ID 83705
Phone: 208.376.9820 Fax: 208.376.9822
www.eciboise.com

FOR BIDDING PURPOSES ONLY - NOT FOR CONSTRUCTION

ARCHITECTS, INC.
17710 Detroit Avenue Lakewood, Ohio 44107
Phone (216) 521-5134 Fax (216) 521-4824
www.adaarchitects.cc

dogtopia

DOGTOPIA

2017 WOODLYNN AVENUE

MAPLEWOOD, MN 55109

This document ("Instrument of Service") was prepared by ADA Architects, Inc. ("ADA") specifically for the referenced project and is not intended for any other use. ADA retains all common law, statutory and other reserved rights, including copyrights. This Instrument of Service shall not be used on other projects, for additions to this project or for completion of this project by others without ADA's prior written consent. Any unauthorized use of this Instrument of Service shall be at the User's own risk and without liability to ADA. ADA makes no warranties, express or implied, of merchantability or of fitness for a particular purpose.

FRANCHISEE
LANG, BERT LLC

REVISIONS

#	DATE	TYPE
1		
2		
3		
4		
5		

FIRE PROTECTION REFERENCE PLAN

DATE 03/23/20

JOB NO. 19492/18W09

FP1.0
SHEET NO.

ELECTRICAL SPECIFICATIONS

A: DESCRIPTION OF WORK

1. The electrical contractor shall provide all labor, material, equipment, and tools necessary for demolition and removal of existing and the complete installation of the new electrical work, ready to use, as shown on the drawings or specified herein. Work shall include, but not be limited to the following:
   i. Furnish and install new conduit and wire.
   ii. Furnish and install new fuses, circuit breakers, panelboards etc.
   iii. Install sprinkler or fire alarm system if required.
   iv. Furnish & install new light fixtures as indicated.
   v. Furnish & install new communications devices.

2. The exact location of all items shown on the electrical drawings is dependent upon field conditions. Review the plans and specifications for all parts and consult with other trades of this project for pertinent data on sizes, locations, wiring, etc., as required for a complete electrical installation.

3. The electrical contractor shall not attach to, cover up, or finish against any defective work, or install in a manner which will prevent proper installation of the work of other trades.

4. The electrical contractor shall warrant all work & material indicated on these electrical drawings for a period of 1 year from the date of final acceptance. Warranty shall include any additional labor or material required to repair or replace defective item.

B: CODES, PERMITS AND FEES

1. All work included by the drawings and specifications, together with all material (or equipment) furnished, shall comply with the latest published codes and standards listed insofar as such shall apply. All electrical items shall be new and UL labeled & listed.

2. The contractor shall secure all permits and pay all fees that are required by the applicable local and state codes.

3. Perform all work in accordance with the latest edition of applicable codes including, but not necessarily limited to those listed below:
   i. The National Electrical Code - sometimes referred to herein as the "NEC" - (NFPA-70).
   ii. National Electrical Safety Code (ANSI-C2).
   iii. All applicable state and local codes.
   iv. Applicable provisions of the Occupational Safety and Health Act.

C: GENERAL REQUIREMENTS FOR SUBMITTING & BID.

1. The drawings represent the design for the listed manufacturers' requirements. If any substitutions are accepted by the engineer, this contractor shall be responsible for all necessary modifications, including cost, to the electrical system required because of the substituted equipment or material.

2. **The electrical, mechanical, architectural, structural, and all other drawings as well as the specifications and addendums are part of the contract documents. any electrical requirements called for on other trades contract documents shall be included in the electrical bid.**

3. **Co-ordination & knowledge of local standards of utility companies is required to submit a bid. Any required deviation from the design by local utility shall be brought to the attention of the Architect or Engineer prior to submitting bid. No extra compensation will be awarded for adjustments to the design that are required by the local utility company.**

4. The contractor shall visit the job site and become familiar with all existing conditions. Submission of a bid assumes the contractor has reviewed or accepts all field Conditions and existing conditions. No additional compensations shall be allowed for labor or material because of ignorance of these conditions before or after bid submission.

5. Discrepancies between the drawings or between the drawings and actual field conditions shall be brought to the attention of the architect and the engineer prior to submitting the bid. The more comprehensive and most expensive scope of work shall be considered for the electrical bid unless written clarification is provided by the architect and the engineer prior to submitting the bid.

D: RACEWAYS

1. EMT conduit shall be used in all interior locations which call for conduit unless noted therwise. Conduits routed thru areas of significant temperature differences shall be provided with seal-off fittings to minimize condensation. Conduits penetrating fire walls shall be firestopped per NEC & Underwriters Laboratories.

2. Rigid PVC Schedule 40 shall be used for all underground or below slab conduit runs.

3. Heavy wall rigid steel conduit shall be used in exterior exposed applications. Provide 2 coats of rust inhibiting paint for exterior runs. Paint shall match surface conduit is attached to.

4. 'MC' cable may be used for all branch circuits located above ceilings or in wall cavities or exposed & attached to supports of suspended light fixtures as allowed by the National Electrical Code & the authority having jurisdiction. Cable shall be installed in a neat professional manner adhering to industry standards.

5. When power or control conductors are installed in a raceway, a green equipment grounding conductor shall be included in each raceway system and shall be sized as shown on the drawings or if not noted on the drawings, then in accordance with Table 250-95 of the NEC, or as indicated on the drawings If green insulation is not available, the grounding conductor shall be bare and clearly and permanently marked at all tap and terminating points by green "scotch" marking tape, code markers, or other approved means.

6. All conduit shall be securely fastened in full accordance and as directed by the latest edition of the National Electrical Code. In addition to the NEC requirements, conduit hangers, supports, or fastenings shall be provided at each elbow and at the end (within 6") of each straight run terminating at a box or cabinet.

7. Conduits or boxes may not be supported by ceiling support wires or other ceiling supporting hardware.

8. Horizontal and vertical conduit runs may be supported by one-hole malleable straps, clamp backs, or other approved devices with suitable bolts, expansion shields (where needed) or beam type clamps for mounting to building structure or special brackets.

9. The use of perforated iron for supporting conduits will not be permitted.

10. Conduit runs between outlets shall contain not more than the equivalent of three (3) quarter bends. Provide junction and/or pull boxes where shown on the drawings or as required, whether shown on the drawings or not. Pull boxes shall be approved for use in the area where they are to be installed. Pull boxes or junction boxes shall be provided in accordance with the following schedule:
    i. Straight runs - not over one hundred (100) feet apart.
    ii. One (1) 90 degree bend - not over seventy five (75) feet apart.
    iii. Two (2) or more 90 degree bends - not over fifty (50) feet apart.

11. In Class I and Class II hazard areas, as designated on the drawings, explosion-proof flexible metal conduit shall be used for all final conduit terminations at motors and to all other devices subject to vibration or movement. This shall include all pendant mounted lighting fixtures and conduit runs at building expansion joints in Class I and Class II hazard areas. Electrical ground continuity shall be provided as noted above.

12. Telephone and data (including other special communication systems such as cable TV) conduits shall be a minimum of 3/4" in size unless noted otherwise, and shall run continuous from outlet to outlet and back to the main terminal board, or shall be stubbed into the ceiling space (6" above the ceiling) and provided with a plastic bushing. Bond conduit stub with a #10 bare copper conductor to the nearest electrical outlet box or continuous metal conduit body. Refer to plans for specific details about the routing of the conduits. All empty conduits shall be provided with a #10 pull wire.

13. Cables installed in plenums without conduit shall be UL classified for low flame resistance and low smoke properties with "FEP" Teflon or Halar insulation suitable for plenum applications per Article 760 of the N.E.C.

14. Conduits below grade shall be installed in conformance with:
    i. Provide all necessary trenching, backfill & removal of trenched material from site.
    ii. The bottom of the trench shall be undisturbed earth or thoroughly compacted fill. The contractor shall be responsible for such compaction. the bottom shall be free of projecting rocks or other foreign matter. Where muck or unstable ground is encountered in the bottom of the trench, it shall be excavated to a depth of at least 12in. below the bottom line of the ducts and replaced with pea gravel in the proper grade. Duct shall not be installed on or in frozen ground. sheeting or bracing shall be provided where necessary to protect the work or adjacent property. Sheeting, bracing, and pea gravel shall be installed by the electrical contractor at no additional expense to the owner. Backfill shall consist of 3 inches of compacted sand below conduits and 12" above conduits. Clean screened fill shall be installed and compacted to 6" below final grade or as detailed in architectural specifications. Final grade patch shall be by E.C.
    iii. Duct joints shall be sealed with waterproof joint compound. Ducts shall be supported at least 3in. above the trench bottom on plastic supports with spacing not exceed 5'. Before duct is placed, supports shall be aligned, set to grade, and placed in concrete to prevent movement when encasement is placed. Ducts shall be secured to supports and spacers placed for tiered ducts.
    iv. All secondary power underground ducts shall be encased with 3000 psi concrete. All underground ducts shall be 4" in diameter schedule 40 rigid non-metallic (P.V.C.) ducts with ground wires, unless specifically indicated otherwise on the drawings. concrete encasement shall be in accordance with the applicable provisions of the general trades portion of the specifications.
    v. Encasement shall be continuous monolithic pour providing a minimum of 3" completely arownd the ducts. Concrete shall not be poured directly on top of the ducts, but shall be poured from the sides and allowed to flow over the ducts.
    vi. Bell ends shall be installed at all duct terminations or as required by the power company. Fittings, couplings and other accessories, as recommended by the manufacturer, shall be provided and installed.
    vii. Ducts shall be cleaned by rodding and brushing. It shall be the contractors responsibility to assure a full bore opening throughout the duct system.

E: FITTINGS FOR CONDUIT

1. Couplings and connectors for EMT: Die cast zinc, steel, or aluminum compression type. Set screw type will also be permitted. Approved manufacturers, Thomas & Betts, Steel City, O-Z Gedney.

2. Fittings for rigid plastic conduit: Polyvinyl chloride, joints solvent welded in field, providing continuity of mechanical strength and water tightness. Fittings and cement shall be produced by the same manufacturer as the conduit.

3. Fittings for rigid conduit: Cast or malleable iron bodies, zinc or cadmium plated, with full threaded hubs, screw covers and gaskets when located in areas requiring gaskets. Approved manufacturers: Crouse-Hinds, Pyle National, Appleton.

4. Couplings and connectors for flexible steel conduit: Malleable iron or steel, zinc or cadmium plated and shall fasten to the conduit by a clamping action around the periphery. Connectors for "liquid-tight" flexible conduit shall be approved for the purpose and maintain the liquid-tight feature of the installation. Approved manufacturers: Thomas & Betts, Steel City, O-Z Gedney.

5. Bushings: Grounding type, with insulating plastic insert; malleable iron, zinc or cadmium plated, for steel conduit and aluminum alloy for aluminum conduit. Install grounding type bushings as required in the grounding section of this specification.

6. Fittings for conduits : All conduit runs at building expansion joints shall be provided with O-Z type expansion fittings. Sizes shall be as dictated by the conduit size. A bonding jumper shall be securely connected to each conduit. Exterior exposed runs of PVC conduit shall be provided with expansion fittings at intervals not exceeding manufaturers recommendations.

7. Outlet, Pull, Terminal and Junction Boxes in Classified (Hazardous) Areas: Cast boxes shall be copper-free aluminum with integral hubs or box wall thickness sufficient for a minimum of five full tapered threads. Covers shall be screw-on bolt-on through 12" x 12" boxes and hinged removable bolt-on covers for larger boxes. Boxes other than outlet boxes shall be equipped with a breather drain and equipment grounding lug and all boxes shall be, as applicable, for installation in the particular classified (hazardous) areas which are designated on the drawings. Approved Manufactures: Crouse-Hinds, Pyle-National, Appleton, Adalet, O-Z Gedney, or Killark.

8. Conduit Fittings in Classified (Hazardous) Areas: Conduit seals and/or drain seals shall be installed in strict accordance with the NEC in classified (Hazardous) areas designated on the drawings, with special attention to the following:
   i. Entering or cross-connecting enclosures containing arcing or high temperature devices.
   ii. Two-inch conduit and larger entering any enclosure.
   iii. Passing from Division 1 to Division 2, from Division 2 to non-classified areas, with or without a barrier.
   iv. Multi-conductor and shielded cables.

F: ELECTRICAL SUPPORTING DEVICES

1. Supports shall be suitable for the device or equipment to be mounted. All supports shall present a neat appearance, and shall be installed in such a way that they do not detract from the appearance of the space. Supports shall have adequate strength and shall be installed so as to properly support the device or equipment mounted on them.

2. Electrical supports shall be attached to the structure by one of the following methods:
   i. Wood - wood screws.
   ii. Concrete - expansion bolts or cast in place anchors.
   iii. Structural steel - approved brackets or machine bolts.

G: CONDUCTORS

1. Conductors shall be new, 600 volt, 90c, type XHHW, THHN or THWN insulation, stranded copper for feeders rated above 60 amps. Compact aluminum may be used for feeders of 150amps or higher. Minimum size shall be #12 AWG for runs of less than 100 feet total circuit length (out and back for single phase circuits and out only for three phase circuits with no neutral). Use #10 AWG for circuits longer than 100 feet. Other sizes shall be as noted. Control wiring may be #14 AWG. All 120 volt and 277 volt circuits shall have a dedicated neutral conductor. The neutral conductor shall be the same size as the phase conductor. All conductors shall be copper.

2. Compression type lugs and connectors shall be used for all terminations and splices. All terminations shall be permanently identified and numbered, using "Brady" labels or other approved equal. Wire numbering shall be panelboard and circuit numbers. Also, all wiring which passes through junction or pull boxes shall be identified with appropriate numbers. When panelboard/circuit numbers are not appropriate for identification, the contractor shall assign a unique number and record this number on the construction set.

H: WIRING DEVICES

1. Provide wiring devices which are UL listed and which comply with NEMA WD 1 and other applicable UL and NEMA standards. Device Color shall be white unless otherwise noted. Coverplate color shall match device color. Confirm color selection with architect before purchasing and installing.

2. Receptacles: Devices shall be specification grade, NEMA 5-20R configuration. Duplex type, Hubbell Cat No. CR5362, single outlet type, Hubbell Cat No. CR5361, GFCI duplex, Hubbell Cat No. CR GF5362. Catalog numbers for Hubbell are shown for reference purposes and equivalent receptacles by other manufacturers as noted above are also approved. Receptacles shall comply with UL 498 and NEMA WD 1. Special receptacles not shown below shall be specification grade with Nema configuration as noted on the drawings.

3. Ground-fault interrupter (GFI or GFCI) receptacles as indicated above shall be designed for and installed in a 2-3/4 inch deep outlet box without adapter, grounding type, Class A, Group 1, per UL Standard 94.3.

4. Snap switches: Devices shall be specification grade quiet type, 20 A 120/277V, single pole Hubbell Cat No. CS1221, two pole Hubbell Cat No. CS1222, three pole, Hubbell Cat No. CS1223, and four pole, Hubbell Cat No. CS1224. Catalog numbers for Hubbell are shown for reference purposes and equivalent receptacles by other manufacturers as noted above are also approved. Devices shall be specification grade, quiet type ac switches, and shall comply with UL 20 and NEMA WD1.

5. Approved manufacturers for wiring devices:
   Hubbell
   P & S

6. Dimmer switches: solid state dimmer switches conforming to NEMA WD 1, mounted in outlet boxes For incandescent fixtures; switch poles and wattage as indicated, 120 V, 60-Hz, continuously adjustable toggle, single-pole, with on-off switch. Equip with electromagnetic filter to eliminate noise, RF and TV interference. Dimmers to be Lutron "Nova T-Star" series for dimmers rated up to 1500 watts and "Nova" series for 2000 watt dimmers. Lighting switches shown adjacent to dimmers shall be Lutron "Nova T-Star" or standard "Nova" style to match dimmers and shall be provided with a single, one piece coverplate. Color shall be specified by architect.

7. Wiring device accessories
   i. Wall plates: Single and combination, of types, sizes, and with ganging and cutouts as indicated. Provide plates and attachment screws which mate and match with wiring devices to which attached. Provide wall plates with engraved legend where indicated. Provide smooth nylon coverplates for finished areas, and galvanized steel plate for unfinished areas.
   ii. Floor service outlets: Modular, above-floor service outlets and fittings of types and ratings indicated. Construct of die cast aluminum, satin finish. Use design compatible with floor outlet wiring methods indicated. Provide 20 Amperes, 125 Volts, gray duplex receptacles. NEMA configuration 5-20R where indicated. Provide with 3/4 inch or 1 inch NPT, 1 inch long, locking nipple for installation where compatible with wiring method.

8. Wiring device installation:
   i. Install switches and receptacles in outlet boxes as specified elsewhere in this specification. Install single pole toggle switches so that the switch is on in the "up" position. Install receptacles with the U-shaped ground slot at the top or to the left.
   ii. Duplex receptacles shall be wired with the neutral wire to the silver binding screw.
   iii. Three phase receptacles shall be wired such that all have the same phase sequence.
   iv. The receptacle circuit and panel number shall be indicated on the inside of all outlet boxes, or directly on the conductors by means of a wire labeling system.
   v. Combination switch/receptacle shall be installed in a two gang box with a combination switch/receptacle coverplate. Connect the receptacle to the lighting circuit ahead of the switch and locate the switch on the side of the box closest to the door. Note, this method is to be used only for 120 Volt lighting system. 277 Volt lighting switches and 120 Volt receptacles shall be located in separate boxes.
   vi. Confirm final location of all wiring devices and outlet boxes with owner/architect prior to rough-in.

9. Wiring devices listed or noted on the drawings as weatherproof shall be provided with a cover which maintains the weatherproof integrity when the cover is closed. Receptacles noted as suitable for operation in a wet locations shall be provided with a cover which will allow the receptacle to remain operational during wet conditions with a plug inserted into the receptacle.

I: LIGHTING

1. Lighting Fixtures: see drawings for manufacturers catolog numbers.

2. Indoor Installation:
   i. The Contractor shall refer to the Architectural drawings for ceiling type, construction and details of mounting. Adjust fixture trim ring as required for correct mounting in ceiling fixture is to be installed. All fixtures shall be supported per NEC Article 410.
   ii. Suspended ceiling systems shall be supported for fixture installation as noted above, and as a minimum condition, as noted in ANSI/ASTM C636-76, par. 2-7, CEILING FIXTURES.
   iii. Install fixtures in accordance with the Architectural Reflected Ceiling Plans. Where substantial differences may occur between the Reflected Ceiling Plans and the Electrical Plans, inform the Architect/Engineer for resolution of the discrepancy.
   iv. The Contractor shall coordinate fixture construction details with ceiling system in which they are installed, i.e.: support system dimensions, flanges where required, acoustical tile or pan pattern, etc.
   v. Rows of fixtures shall be installed accurately as to line and level. Fixtures shall be securely mounted so that they will not be distorted by handling incidental to normal maintenance.
   vi. Surface type fluorescent lighting fixtures mounted on acoustical ceiling must be coordinated with the Architectural drawings in order that a main "T" runner will be placed in the center of each fixture and/or each row of fixtures. Main "T" runner shall be of at least the same length as the lighting fixture and shall be supported to carry at least twice the weight of the lighting fixture.
   vii. All fixtures shall be securely supported with approved hangers. Where fixtures will be installed in suspended ceilings, any Code-required additional ceiling supports as approved by the Architect, shall be provided by this Contractor.
   viii. Provide supports for all lighting fixtures as detailed on the Drawings, as specified, or as required by the fixture specified. Fixtures installed in unfinished areas (areas including but not necessarily limited to warehouses, factory areas, manufacturing areas, office spaces without lay-in ceilings, and spaces above lay-in ceilings) shall not be fastened directly to the structure. In these cases, unistrut type channel along with the appropriate fasteners and clips shall be used to support the fixtures.
   ix. Fixtures shall not hang directly from conduit boxes unless the boxes have been specifically designed for such purposes. These boxes shall be supported independent of the conduit system and shall not rely upon the conduit for support.
   x. Lay-in troffers in suspended ceilings and surface type fixtures mounted to suspended ceilings shall be secured mechanically by screws, rivets, clips, etc. as per Section 410-16(C), NEC. Additionally, lay-in fixtures shall also be supported by two independent support wires running from diagonally opposite corners of the fixture to the overhead structure. Surface mount fixtures shall be additionally supported by means of at least two clips for each fixture which surround the T-bar and are tied to the overhead structure with a separate wire. The surface fixtures shall be secured to these clips.
   xi. Plaster frames shall be furnished for each recessed fixture installed in plaster ceilings and walls.
   xii. Pendant mounted fixtures shall utilize pipe stems to mount fixtures at elevations as noted on the drawings. Chains or cords will not be accepted. Wherever the mounting surface slopes, fixtures shall be provided with universal type fixture hangers to allow the fixture to hang plumb.
   xiii. Fixtures shall be installed with due regard for beams, piping, ductwork, and other mechanical or plumbing equipment.
   xiv. Incandescent fixtures shall be thermally rated, protected and marked for their application especially in recessed mounting, to protect against over-temperature and combustion. The installation shall comply with Section 410-65 thru 410-72 the NEC.
   xv. Branch circuit conductors shall be run in fluorescent fixture wiring channels only as permitted by the N.E.C. The Contractor shall be responsible for providing all necessary boxes and conduit for an approved installation.
   xvi. Where a modular wiring system is installed, all ceiling mounted recessed fluorescent lighting fixtures shall be furnished with suitable receptacles to match the modular wiring system furnished and installed by this Contractor. Each fixture shall be equipped to permit either single or multiple fixture circuit wiring as is appropriate for the fixture type.
   xvii. When fixtures are installed in a fire proof ceiling, the fixture shall be U. L. listed to maintain the fire proof rating or the fixture shall be fire proofed by the electrical contractor using a U. L. accepted standard. see architectual drawings for ceiling ratings.
   xviii. At the time of final inspection all fixtures and equipment shall be complete with all required glassware and/or reflectors, clean and free of defects. Any glass-ware, or reflectors, etc., which have defects shall be replaced at the Contractor's expense before final acceptance.
   xix. All lamps shall be in working order at the time of final acceptance of the work by the Owner and Architect/Engineer. This Contractor shall replace all defective lamps with new lamps until the work is finally accepted.
   xx. Low voltage lighting transformers should be protected by fuses. Fuse sizes shall be as recommended by the transformer manufacturer. Busman type HRS or Littelfuse 155020, fuse holders are recommended.
   xxi. Solid state transformers for low voltage lighting shall not be used for dimming applications unless the transformer and dimmer are a U. L. listed assembly specifically intended for the application.

3. Outdoor and Site Lighting Installation:
   i. Site lighting luminaires shall be as called for on the drawings.
   ii. Bases for site and roadway luminaires where required, shall be augered into the earth and concrete shall be poured into the augered hole without a sona tube below grade to allow the concrete to fill the natural crevices in the earth. Portion of base above grade shall be formed using a sonatube. Exposed portion of finished base shall be smoothed, and voids filled with grout.
   iii. Bases shall have reinforcing steel as indicated on the contract drawings and shall be Class 'A' concrete.
   iv. Anchor bolts for poles shall be performed for the pole bolt circle at the factory.

J. Lighting and Receptacle Panelboards

1. Panelboards for 480/277, 208/120, or 240/120 volt lighting and receptacle service shall be dead front type, conforming to NEMA standard PB-1-1-71 and UL 67, and consisting of three phase, three or four wire solid neutral, main lugs or main overcurrent device as indicated, branch overcurrent devices as noted and equipment ground bar, all in a surface or flush mounted code gauge galvanized sheet steel cabinet as indicated. Enclosure to be NEMA 1 unless noted otherwise with primer and finish paint of the manufacturers standard. All busing shall be copper.
   i. Standard enclosure shall be NEMA 1, unless noted otherwise, with primer and finish paint of the manufacturers standard. Cabinets shall be oversized where necessary to accommodate the entrance of several large conduits and/or when necessary to avoid overcrowding except cabinets for panels mounted flush shall be not more than 22 inches wide and 5-3/4 inches deep unless otherwise approved by the architect/engineer. Trims shall contain hinged doors and shall be equipped with flush chrome plated combination key locks and catches. Locks shall be all keyed alike and two keys furnished to the owner.
   ii. Column-type enclosures shall be similar to the standard enclosure except panel shall be approximately 8-1/2 inches wide for mounting between building column webs as indicated, and provided with extension trough and pullbox with neutral bar when shown on the drawings.
   iii. Where spaces are noted on the drawing, equip the panelboard with bus and all necessary hardware for future circuit breaker installation.
   iv. Metal frame and plastic covered typewritten card shall be mounted inside each panel door. Information entered onto the cards shall correspond to the circuit numbers as installed in the field.

2. Overcurrent Protective Devices
   i. General use circuit breakers for panelboards shall be bolt-on molded plastic case type, 1, 2, or 3 pole, quick-make, quick-break, with trip-free operating handle, position indicating and thermal-magnetic trip device. Furnish 2 and 3 pole breakers with common operating handle and common trip mechanism. All circuit breakers used for switching applications shall be U.L. listed type "SWD" for that application. all circuit breakers used for protection of motors, refrigeration equipment, or HVAC equipment shall be U.L. listed type "HACR" for that application.
   ii. Circuit breakers furnished with panelboards shall conform to the following interrupting ratings (symmetrical) in amperes unless otherwise noted:

Voltage Rating	Trip Rating	No. of Poles	I.c. Amperes (Symmetrical)	Frame Size
120	15-100 ampere	1	22,000	100 amp
240	15-100 ampere	2&3	22,000	100 amp
240	125-225 ampere	2&3	22,000	225 amp
240	250-400 ampere	2&3	42,000	400 amp
277	15-100 ampere	1	25,000	100 amp
480	15-100 ampere	2&3	25,000	100 amp
480	125-225 ampere	2&3	30,000	225 amp
480	250-400 ampere	2&3	42,000	400 amp
480	400-800 ampere	2&3	42,000	800 amp

   iii. Ground fault circuit interrupters shall be similar to general use circuit breakers specified; 15-20 ampere, 1 or 2 pole with 5ma sensitivity. Furnish when indicated on drawing.
   iv. Fuses over 600 ampere shall be Bussman Hi-cap time delay type KRP-C, or Gould Shawmut A4BQ (601-2000 ampere) or Gould Shawmut A4BY (2001-6000 ampere) 600 volt, UL Class I with minimum interrupting rating of 200,000 ampere rms symmetrical.
   v. Fuses 600 ampere or below shall be Bussman low-peak dual element type LPN-RK (250 volt) or LPS-RK (600 volt) or Gould Shawmut Amp-trap type A2K (250 volt) or A6K (600 volt) UL Class RK1 with minimum interrupting rating of 200,000 ampere rms symmetrical.
   vi. Provide spare circuit breakers installed in panelboards as indicated on the panel schedule as shown on the drawings. Provide 10% spare (minimum of 3) of each type and rating of fuses installed.

3. Safety Switches
   i. Provide fusible or non-fusible safety switches as indicated on the drawings. Switches shall be quick-make, quick-break, heavy duty visible blade type, horsepower and I squared T rated. Use NEMA 12 enclosures in factory areas, NEMA 1 enclosures in other indoor areas and NEMA 4X stainless steel type enclosures outside unless otherwise indicated on the drawings. Furnish three pole, single-throw switches unless otherwise indicated, with current and voltage ratings as indicated.
   ii. Provide safety switches with an external operating handle interlocked with the cover door to prevent the door from being opened while the switch is in the "on" position except by operating an inconspicuous interlock defeating mechanism. Provide means for padlocking the operating handle in the "off" position. Equip switches with auxiliary contacts when indicated.
   iii. Fuse clips shall be rejection type for fuses specified (up to 600 ampere). Fuses clips for 601 ampere to 6000 ampere shall be suitable for UL Class I fuses.

4. Transformers
   i. Transformers shall be indoor dry, two winding, quiet type, with ventilated enclosure, conforming to NEMA standards, 220 degrees celcius insulation for continuous operation in a 40 degree celsius ambient temperature with a temperature rise not to exceed 80 degrees celsius.
   Provide a minimum of two 2-1/2% FCAN and four 2-1/2%
   FCBN taps in the primary winding for transformers over 25 KVA and a minimum of two 2-1/2% FCBN taps for transformers 25 KVA and below. Transformers 25 KVA through 75 KVA shall be designed for floor or wall mounting.
   ii. Sound levels shall not exceed those established in ANSI standard C89 shown in the following table:

KVA	dB level
0-150	42

   iii. Furnish transformers having voltage, KVA ratings and connections as indicated on the drawings.

5. Panelboard and Transformer Installation
   i. Mount panelboards at uniform height throughout the building, and such that the top switch is not more than 79 inches above floor when measured to the center of the switch handle.
   ii. Install handle guards on all breakers for night lighting, emergency, and similar circuits when indicated.
   iii. Each panelboard shall be identified with a legend plate of lamicoid plastic inside the door for panelboards in finished areas and on the outside of panelboards in unfinished areas with the panel designation as shown on the drawings.
   iv. Install not less than two spare 1-1/4 inch conduits from each flush mounted panel to an accessible area above the ceiling.
   v. When branch circuits are not scheduled on the drawing, they shall be arranged to balance the phase loads on each panelboard and the loads shall be equally distributed on each of the phases of the panelboard.
   vi. Mount panelboard, safety switches, and similar equipment securely to walls or steel supports. Equipment mounted on the building perimeter foundation walls shall be shimmed at least 1/4 inch from the wall to permit back ventilation.
   vii. Provide supports for truss mounted and wall mounted transformers. All transformers which are mounted above panelboards shall be mounted away from the wall by an amount equal to the depth of the panelboard. The width of the panelboard shall also be maintained clear behind the transformer.
   viii. Approved Manufacturers for Power Distribution Equipment:
   General Electric Company — Siemens
   Cutler Hammer/Westinghouse — Cleveland Switchboard Co.
   Square D

K: RACEWAY AND GENERAL GROUNDING

1. The entire power, lighting system as well as building structure, mechanical & plumbing systems, fences & simalar metal objects shall be permanently and effectively grounded in accordance with the minimum requirements of the National Electrical Code, or as specified herein, whichever is the more stringent.

2. Ground conductors shall be stranded, annealed copper with green insulation (insulation material as specified for general building use).

3. The entire power and lighting system shall be permanently and effectively grounded including panels, starter enclosures, motor frames, and other exposed, non-current carrying parts of the electrical equipment. The equipment ground conductor shall be separate from the neutral conductor and shall not be used as a load current carrying conductor.

4. Any item covered by the preceding paragraph which is within six feet of grounded metal and not directly interconnected with the grounded metal shall have a flexible bare copper cable connection not smaller than #6 AWG to the grounding system.

5. Where building type conductors are installed in a raceway, a green equipment grounding conductor shall be included in each raceway system.

6. Lighting fixtures permanently connected to the conduit system shall be grounded by means of a grounding conductor run inside the conduit. Fixtures mounted on trollies or portable lighting units shall be grounded by means of a grounding conductor in the portable cord.

7. Convenience outlets shall be self-grounding type or shall have a green grounding conductor installed from the ground lug on the outlet to the outlet box.

8. Motors shall be connected to the equipment ground conductor with a conduit grounding bushing and with a bolted solderless lug connection on the metal frame.

9. The armor of interlocked armor cable, wiring channels, cable trays, and all metallic conduit including rigid, EMT, and flexible conduit shall be connected at each end to the equipment ground conductor utilizing a conduit grounding bushing. Junction boxes and other enclosures (sizes above 5" x 5") shall utilize an equipment ground lug to securely bond the equipment grounding conductor to the enclosure.

10. Where any grounding conductor requires physical protection to maintain grounding integrity, it shall be run through a non-ferrous conduit or bonded to a continuous steel conduit at both ends.

11. The grounding electrode system shall consist of ½" diameter x 10' copper clad ground rods. Exterior ground rods shall be driven to 12" below finished grade & be provided with a 12" diameter x 30" long rigid pvc pipe w/ screw cover for inspection purposed. center ground rod in pipe & install pipe flush with grade. pvc pipe and cover shall be traffic rated. interior ground rods shall be driven to 6" above grade & installed as close to a wall as possible. all connections to ground rods shall be cadweld type.

L: EXECUTION

1. The contractor shall exercise due caution when working so as not to damage that portion of the electrical system that is to remain.

2. Positively no conduit or wire removed shall be reused in the new installation.

3. All circuits shall be identified on the panel directories by this contractor. At the completion of the job, the contractor shall provide each panelboard with a new typed directory with the existing loads as noted from the old directory and the new loads as installed.

4. The contractor shall keep on the job, one complete set of working drawings on which he shall record any deviations or changes from such contract drawings made during construction. Record drawings shall show changes in the following:
   i. Size, type, capacity, etc. of any material, device or piece of equipment.
   ii. Location of any device or piece of equipment.
   iii. Location of any outlet or source in the building service system.
   iv. Routing of any conduit, or other building electrical service.

   These drawings shall be kept clean and undamaged, and shall not be used for any other purpose than recording deviations from working drawings and exact locations of concealed work. After the job is completed, this set of drawings shall be delivered to the owner in good condition, as a permanent record of the installation as actually constructed.

M: CUTTING AND REPAIRING

1. All necessary cutting in walls, floors and other such work shall be neatly and carefully done and the work shall be repaired in an approved and workmanlike manner. No cutting into the structural parts of the building, which may impair its strength, shall be permitted without the prior written approval of the owner. If such cutting is permitted, the area shall be suitably reinforced to restore the structural integrity of the work to its designed value.

03-23-20

BRIAN M. SCHUER
LICENSED PROFESSIONAL ENGINEER
48145
STATE OF MINNESOTA

ADA ARCHITECTS, INC.
17710 Detroit Avenue Lakewood, Ohio 44107
Phone (216) 521-5134 Fax (216) 521-4824
www.adaarchitects.cc

dogtopia

DOGTOPIA

MAPLEWOOD, MN 55109

2017 WOODLYNN AVENUE

This document ("Instrument of Service") was prepared by ADA Architects, Inc. ("ADA") specifically for the referenced project and is not intended for any other use. ADA retains all common law, statutory and other reserved rights, including copyrights. This instrument of Service shall not be used on other projects, for additions to this project or for completion of this project by others without ADA's prior written consent. Any unauthorized use of this Instrument of Service shall be at the user's sole risk and without liability to ADA. ADA makes no warranties, express or implied, of merchantability or of fitness for a particular purpose.

FRANCHISEE

LANG, BERT LLC

REVISIONS

#	DATE	TYPE
1		
2		
3		
4		
5		

ELECTRICAL SPECIFICATIONS

DATE 03/23/20

JOB NO. 19492

E0.1

SHEET NO.

2. The electrical contractor shall be responsible for all damage to work of his, or other trades, caused by his work or through the neglect of his workmen. All patching and repairing of damaged work shall be done by the trade which originally installed it, at the direction of the owner's representative, and the cost of such repair shall be paid by the electrical contractor.

3. Absolutely no cutting of wall, floor or other finished material or fastening of electrical components to the exposed surfaces of finished areas will be permitted.

N: TESTING

1. The testing work shall include all labor, materials, tools, and equipment to perform and record all necessary tests and adjustments of equipment, including Load Center Unit Substations, Motor Control Centers, High Voltage Cable, 600 Volt Wire and Cable, and Grounding, as indicated on the drawings, specified herein, or where necessary to verify performance requirements.

2. Inspection tests shall provide a visual inspection of electrical equipment for manufacturing, shipping or installation defects.

3. Acceptance tests shall show that the methods and materials used in the installation of equipment conform to applicable codes and standards, and the manufacturers installation instructions, and to determine that the equipment involved may be energized for operational tests.

4. Operational tests shall show the electrical equipment will perform the functions for which it was designed.

5. The services of a recognized independent testing laboratory shall be engaged to conduct all tests described herein with the exception of routine insulation resistance, continuity and rotation tests.

6. Perform all acceptance and operational tests in the presence of the Architect/Engineer. Notify the Architect/Engineer of time of test at least two (2) days prior to testing. Notify manufacturers of electrical equipment to permit their representatives to witness the test should they so request.

7. Submit test reports, including complete data and actual readings taken, for all equipment tested to the Architect/Engineer for approval after each test performed. Do not energize any equipment for operating tests until data has been approved. Include copies of the final approved test reports upon completion of the work as part of the required operating and maintenance data to be furnished as specified in Division 1.

8. Give each power feeder and subfeeder cable (600 Volt Wire and Cable) a continuity and megger test. Isolate power cables to be megger tested by opening switches at each end of cable prior to testing. Apply megger tests, using a 1000 volt megger, between each conductor and ground with the other two conductors in the conduit grounded to the same ground. Minimum acceptable readings for disconnected cables shall be 1 (one) megohm. Cable must pass megger test to be reported as acceptable.

9. The following test and inspections shall be made on the grounding system.

   i. Inspect ground conductors and connections for compliance with plans and specifications and for satisfactory workmanship. After installation of the grounding electrodes, provide ground resistance testing prior to the interconnection of other grounding systems. Do not perform tests under unusually wet weather; tests should be performed during normal weather conditions.

   ii. Reports shall include all resistance readings obtained, temperature, humidity and condition of the soil at the time of the tests.

10. Operational tests shall be performed on all electrical systems, and shall include, but not be limited to, building lighting system, panelboards, motor starters and control devices, alarm circuits and site lighting equipment.

O: GUARANTEE

1. Material, equipment and installation shall be guaranteed for a period of one year from the date of acceptance. Defects which appear during that time period shall be corrected by this contractor at his expense.

P: COMMUNICATIONS

1. All telephone / data cable and connecting hardware shall be rated category 5e.

2. All telephone / data cable and connecting hardware shall be terminated in the TIA/EIA 568B 4 pair configurations.

3. **The communications system shall be installed by qualified contractors who have been certified by the system manufacturer for a period of at least two years prior to commencing this work. All installing workers shall be BICSI certified level 1 installers or have completed the telecommunications installer/technical program offered by the national joint apprenticeship and training committee. The job foreman shall be a BICSI certified technician. Copies of all certificates of the company employees shall be submitted by the contrctor with the shop drawings.**

4. All cable and equipment shall be installed in a neat and workmanlike manner. All methods of construction that are not specifically described or indicated in the contract documents shall be subject to the control and approval of the owner or owners representative. Equipment and materials shall be of the quality and manufacturer indicated. The equipment specified is based upon the acceptable manufacturers listed. Where "approved equal" is stated, equipment shall be equivalent in every way to that of the equipment specified ad subject to approval.

5. Strictly adhere to all category 5E (BICSI and TIA/EIA) installation practices when installing utp data cabling.

6. Category 6 compliant jacks - UTP

   A. Physical Characteristics

      i. Jacks shall be 8 position un-keyed.

      ii. Each jack shall be an individually contructed unit and shall snap mount in an industry standard keystone opening (.760"x580")

      iii. Contact plating shall be a minimum of 50 micro inches of hard gold in the contact area over 50 micro-inch of nickel.

      iv. Jack termination shall follow the industry standard 110 IDC.

      v. Jacks shall utilize a paired punch down sequence. Cable pair twists shall be maintained up to the IDC, terminating all conductors adjacent to its pair mate to better maintain pair characteristics designed by the cable manufacturer.

      vi. Jacks shall terminate 22-26 AWG stranded or solid conductors.

      vii. Jacks shall be compatible with TIA/EIA 606 color code labeling.

      viii. Jacks shall be marked with T568B wiring.

7. Unshielded Twisted Pair Cable (UTP)

   A. Category 6 four pair unshielded twisted pair cable: multi-paired cable, unshielded four twisted pair, 24 gauge solid copper annealed conductors.

   B. Cable shall meet or exceed EIA/TIA 568 commercial building wiring standards and EIA/TIA technical systems bulletin 36 unshielded twisted pair cables.

   C. Plenum cable is required, jacket will be teflon or like material and cable will be fire rated for use in air return spaces or shall be installed in a complete conduit system.

   D. Data cable outer jacket color shall be blue.

   E. Telephone cable outer jacket color shall be grey.

   F. Cable manufacturer and product shall be a partner to jack manufacturer to qualify for jack manufacturer standard 25 year warranty.

   G. CABLE INSTALLED UNDERGROUND IN-SLAB OR BELOW SLAB SHALL BE RATED FOR DIRECT BURIED APPLICATIONS & COME COMPLETE WITH A FLOODING COMPOUND & POLYETHYLENE JACKET.

8. Installation

   A. Category 6 jacks

      i. Jacks shall be installed to provide minimal signal impairment by preserving wire twists as close as possible to the point of mechanical termination. The amount of untwisting in a pair as a result of termination to the jack shall be no greater then 0.5 inches (13mm)

      ii. Jacks shall be installed according to manufacturers instructions and properly mounted in plates, frames, housings or other appropriate mounting device.

      iii. Jacks shall be installed such that cables terminated to the jacks maintain minimum bend radius of at least 4 times the cable diameter into the idc contacts. cables shall be terminated on jacks such that there is no tension on the conductors in the termination contacts.

   C. Category 6 UTP cable

      i. Provide telephone/data cable of manufacturers standard materials as indicated by published product information, designed and constructed as recommended by manufacturer, for a complete installation and for applications indicated.

      ii. Do not exceed the minimum bend radius as recommended by the cable manufacturer. Maintain a maximum bend radius of 4 times the cable diameter. Never exceed a 90 degree bend.

      iii. Do not exceed the maximum tensile loaded as recommended by the cable manufacturer. Never exceed 25 pounds of pulling tension.

      iv. Minimize outer jacket twisting during installation.

      v. Do not remove more of the outer jacket of the cable then is absolutely necessary for termination. individual pairs may be untwisted a maximum of 0.5 inches from the point of termination.

      vi. Cable pathways shall be routed in such a way as to maintain clearance from sources of electromagnetic interference (i.e. - light fixtures, motors, power conduits, etc.) maintain a minimum 6" of air space between cables and EMI sources.

      vii. Cables shall be routed in such a way as to minimize the overall length of the run. Cable length ahsll not exceed 90 meters.

      viii. Cable management system: Provide a complete cable managment system including but not limited to : Cable runways, horizontal and vertical wire management panels, "j" hooks, velcro cable ties, stainless steel cable ties, etc.

      ix. "J" hooks shall be a minimum of 1¾" wide and come complete with a removable and reusable retaining strap. J hooks shall support a maximum of 6 cables.

      x. Provide velcro cable ties at the racks as required to finish dress the cable installation. Tie a maximum of four cables. Velcro Cable ties shall be black.

9. TIA/EIA 606 complaint labeling

   A. Provide a complete communications system labeling system. Include but not limited to: Cables, jacks, patch panel racks, etc. All labeling shall comply with standards of TIA/EIA 606.

   B. Provide .8" x .75" typewritten black lattering on white laminated adhesive label on each data/coaxc cable. Provide the outlet number that the cable feeds. Labels shall be placed on each cable at the rack and in each outlet box.

   C. Provide 1.375" x .280" black typewritten letting on white adhesive polyester label on each data and co-axial jack located at the outlets and in the patch panels. Wrap label on sides of modular jacks.

   D. Each jack at each outlet shall be labeled with its own number. as a preface, a data jack number shall be labeled with a 'D', telephone cables shall be labeled with "T". Where data jacks are mounted in the same outlet box they both shall have the same number designation.

   E. Provide a complete labeling plan to the owner for the review prior to commencement of work for approval.

10. Category 6 cable testing

   A. The contractor shall test each cable after installation and termination to certify that each cable complies with EIA/TIA category 6 standards.

      i. The testing methods and apparatus for field testing of cabling links shall be TIA TSB 67 level III complaint.

      ii. Notify the owner a minimum of two working days prior to testing the communication network so that the owner, at his discretion, can observe testing.

      iii. Any cable links which do not certify at EIA/TIA category 6 standards shall be repaired or replaced by the contractor at his own expense.

      iv. The cable shall be tested with owners testing apparatus and any discepancies of the test results shall require the contractor to retest the links in question in the presence of the owner at the contractors expense.

      v. The contractor shall provide the owner with written results of the certification preocess. results shall be provided no more then 10 working days after tests are completed.

11. Warranty:

   A. The Jack Manufacturer shall provide a 25 year guarantee on the components, performance, and installation integrity of the entire structured cabling system.

   B. The connection hardware, cable and installer shall all be certified by the jack manufacturer for the entire structured cable system.

TRCA
TECHNOLOGY RESOURCE CENTER OF AMERICA

DOGTOPIA ▸ SERVICES ▸ GUIDANCE FOR BACKBOARD

Desired Backboard Configuration

dogtopia.

Purpose:

Seamless handoff from low voltage vendor scope to TRCA tech installation scope.

This guidance is intended to suggest a best-practice solution that is easy to deploy and that provides a professional, cost-efficient, and solid foundation for network equipment at the franchise store level.

Understanding:

- Upon TRCA tech arrival: Backboard, power receptacle, conduit, and LV cabling are present at IT closet area; power receptacle placed to allow at least 20-inch-by-20-inch wall-mount 8U rack
- Cabling of all LV drops between endpoint stations and IT closet are completed by LV vendor
- Cable drops are clearly labeled on both ends and terminated ONLY at station end by LV vendor
- 10-foot labeled service loop is left at backboard to allow TRCA termination to patch panel
- TRCA will supply appropriate patch panel and wall-mount 8U rack for all network devices, and will terminate to patch panel as part of installation scope

Images:

Figure 1. Labeled 20-foot service loop at backboard

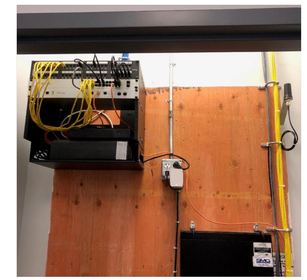

Figure 2. TRCA finished network stack shown as example – Components (top to bottom) include patch panel, router, PoE switch, carrier components, UPS

Technology Resource Center of America | 2600 Virginia Circle, Denton, TX 76209 | www.trca.com | 940-323-2640 | Dave.Ferber@trca.com

TRCA NOTE:

THE LV VENDOR IN ABOVE DESCRIPTION OF WORK IS THE ELECTRICAL CONTRACTOR.

03-23-20

BRIAN M. SCHUTER
LICENSED PROFESSIONAL ENGINEER
48145
STATE OF MINNESOTA

ADA ARCHITECTS, INC.
17710 Detroit Avenue Lakewood, Ohio 44107
Phone (216) 521-5134 Fax (216) 521-4824
www.adaarchitects.cc

dogtopia

DOGTOPIA

MAPLEWOOD, MN 55109

2017 WOODLYNN AVENUE

This document ("Instrument of Service") was prepared by ADA Architects, Inc. ("ADA") specifically for the referenced project and is not intended for any other use. ADA retains all common law, statutory and other reserved rights, including copyrights. This Instrument of Service shall not be used on other projects, for additions to this project, or for completion of this project by others without ADA's prior written consent. Any unauthorized use of this Instrument of Service shall be at the User's sole risk and without liability by ADA. ADA makes no warranties, express or implied, of merchantability or of fitness for a particular purpose.

FRANCHISEE

LANG, BERT LLC

REVISIONS

#	DATE	TYPE
1		
2		
3		
4		
5		

ELECTRICAL SPECIFICATIONS

DATE 03/23/20

JOB NO. 19492

E0.2

SHEET NO.

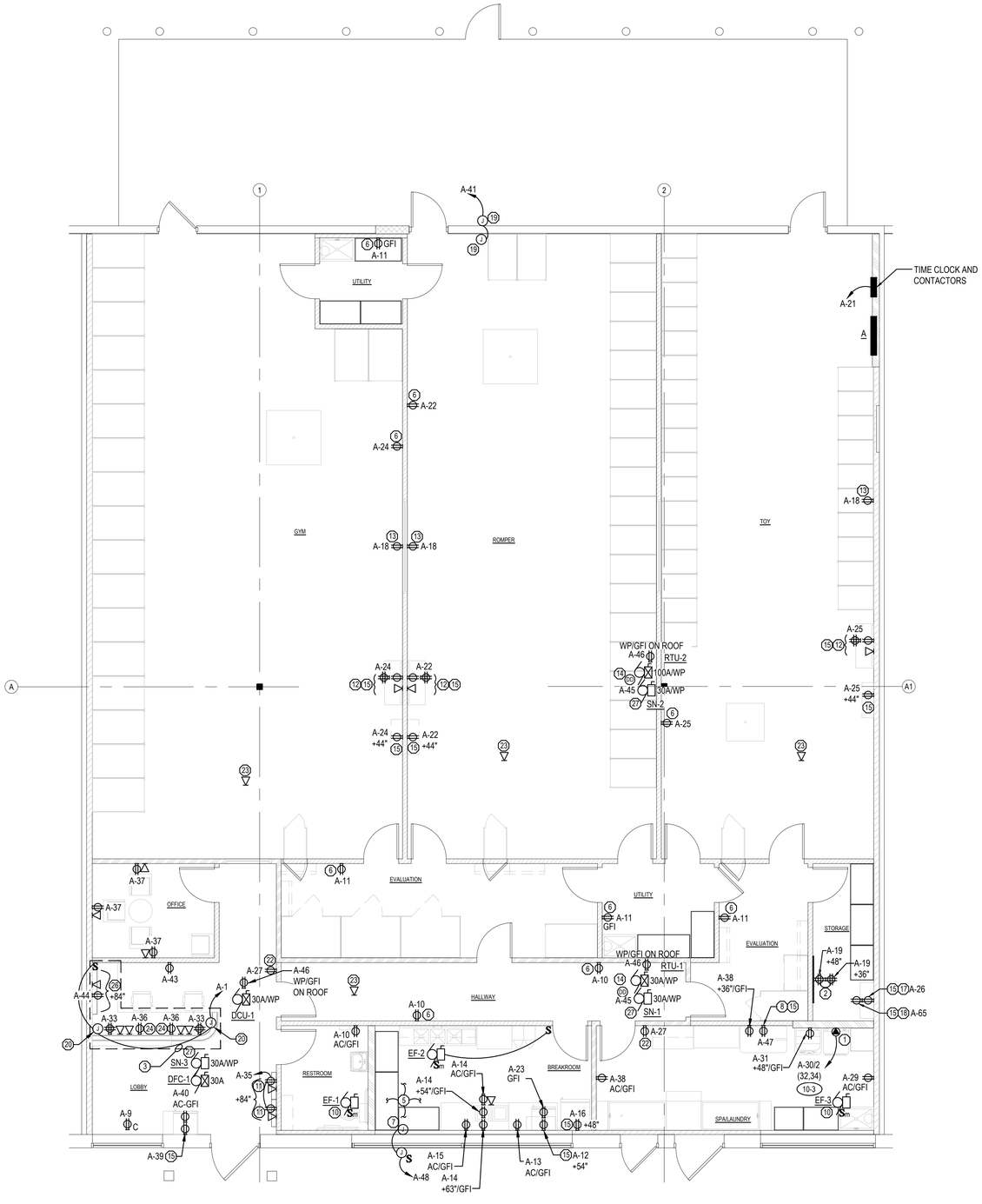

N

POWER PLAN 16

SCALE 3/16" = 1'-0"

GENERAL ELECTRICAL DEMOLITION NOTES

A) NO ATTEMPT HAS BEEN MADE TO INDICATE ALL EXISTING ELECTRICAL DEVICES, LIGHT FIXTURES, COMMUNICATION DEVICES, WIRING, CONDUIT, ETC. TO BE REMOVED AND/OR RELOCATED. HOWEVER, THE ELECTRICAL CONTRACTOR SHALL FIELD VERIFY THE EXTENT OF DEMOLITION PRIOR TO SUBMITTING BID.

B) REMOVE AND/OR RELOCATE EXISTING ELECTRICAL DEVICES NOT NOTED AS EXISTING TO REMAIN. COORDINATE SUCH CONDITIONS WITH ARCHITECTURAL DRAWINGS.

C) EXISTING CONDUITS, CIRCUITS OR SYSTEMS IN WALLS OR CEILING BEING REMOVED WHICH SERVE SURROUNDING UN REMODELED AREAS SHALL BE REWORKED AND MAINTAINED.

D) EXISTING CONDUITS, CIRCUITS OR SYSTEMS PASSING THROUGH THE REMODELED AREAS WHICH SERVE UNREMODELED AREAS SHALL REMAIN AND BE PROTECTED DURING DEMOLITION AND REMODELING, AND SHALL BE RELOCATED AND REROUTED.

E) CONTINUITY OF CIRCUITS INTERRUPTED BY REMOVAL OF ELECTRICAL DEVICES SHALL BE MAINTAINED.

F) ALL UNUSED WIRE (POWER & COMMUNICATION) SHALL BE REMOVED.

G) ALL EXISTING WIRING (POWER & COMMUNICATION) THAT IS TO REMAIN SHALL BE REWORKED OR REPLACED WITH CODE COMPLIANT MATERIAL & SUPPORTS. ANY EXISTING SURFACE MOUNTED CONDUITS SHALL BE REMOVED OR RELOCATED SO THAT THEY ARE IN THE JOIST SPACE OR WITHIN WALL CAVITIES.

H) EXISTING LIGHT FIXTURES THAT REMAIN OR ARE BEING RELOCATED SHALL BE CLEANED AND RE-LAMPED WITH 4' T8 LAMPS. BROKEN LENSES SHALL BE REPLACED. PROVIDE NEW T8 BALLASTS IF REQUIRED.

I) EXISTING LIGHT FIXTURES, ELECTRICAL / TELECOMMUNICATION DEVICES, PANELBOARDS ETC. THAT ARE NOT TO BE REMOVED SHALL BE NOTED AS EXISTING TO REMAIN ON THE DRAWINGS. SEE ARCHITECTURAL & MECHANICAL DRAWINGS FOR ADDITIONAL INFORMATION ON SCOPE OF DEMOLITION.

FIRE ALARM/CARBON MONOXIDE DETECTION SYSTEM NOTE

FIRE ALARM SYSTEM AND CARBON MONOXIDE SYSTEM DESIGN ARE NOT PART OF THE SCOPE OF THESE DOCUMENTS. THE TENANT SHALL HIRE A FIRE ALARM SYSTEM CONTRACTOR TO DESIGN, STAMP, AND SUBMIT DOCUMENTS TO THE AHJ UNDER A SEPARATE PERMIT. ELECTRICAL CONTRACTOR SHALL CO-ORDINATE WITH FIRE ALARM CONTRACTOR AND PROVIDE 120 VOLT POWER FOR THE PANEL, ALL REQUIRED CONDUITS, AND BOXES.

SOUND ATTENUATION NOTE

ALL BOXES FOR RECEPTACLES, SWITCHES, COMMUNICATION DEVICES, AND FIRE ALARM DEVICES LOCATED IN ACOUSTICALLY SEALED WALLS (SEE ARCHITECTURAL DRAWINGS FOR WALL TYPES) SHALL HAVE THE BACK AND SIDES ENCAPSULATED BY FIRE PUTTY PADS (HILTI #CFS-P PA FIRE STOP PUTTY PADS OR STI #SSP PUTTY PADS).

POWER PLAN NOTES

01 E.C. SHALL COORDINATE WITH MANUFACTURER SPECIFICATIONS FOR CONNECTION REQUIREMENTS TO LAUNDRY DRYER. VERIFY SCOPE OF WORK PRIOR TO ROUGH-IN.

02 PROVIDE 4'x4'x3/4" FIRE RATED PLYWOOD FOR TELEPHONE / COMMUNICATIONS SYSTEMS. TERMINATE ALL CAT 6 CABLES ON WALL MOUNTED PATCH PANEL.

03 ROUTE EMT CONDUITS FROM JOIST SPACE DOWN WALL CAVITY & INTO MILLWORK. RUN MC CABLE IN MILLWORK FOR POWER & 3/4" FLEXIBLE STEEL CONDUIT FOR DATA. RUN CONDUITS IN VOIDS OF FURNITURE. COORDINATE LOCATION OF RECEPTACLES WITH OWNER / G.C. PRIOR TO ROUGH-IN. SEE ARCHITECTURAL DRAWINGS FOR DETAILS.

04 NOTE NOT USED.

05 E.C. TO VERIFY CONNECTION MOUNTING HEIGHTS OF BREAK ROOM EQUIPMENT PRIOR TO ROUGH IN. COORDINATE WITH ARCHITECT/OWNER AS REQUIRED.

06 INSTALL RECEPTACLE HORIZONTALLY AT 52" AFF.

07 PROVIDE WP JUNCTION BOX AND 120V 1P DISCONNECT FOR CONNECTION TO EXTERIOR SIGNS. COORDINATE LOCATIONS/MOUNTING PER ARCHITECTURAL PLANS. VERIFY LOCATIONS AND MOUNTING HEIGHTS PRIOR TO ROUGH-IN. WIRE THRU TIME CLOCK.

08 E.C. TO PROVIDE CEILING MOUNTED DUPLEX RECEPTACLE FOR CONNECTION TO EXTENSION CORD REEL. PROVIDE & INSTALL WHITE 12AWG 3 OUTLET CORD REEL. WALL MOUNT TIGHT TO CEILING TO WOOD BLOCKING WITH 3" WOOD SCREWS & WASHERS. GLOBAL INDUSTRIAL #WGB790533.

09 MOUNT SWITCH ON WALL A MINIMUM OF 27" FROM OPENING OF DOOR. **(NOTE NOT USED)**

10 EXHAUST FANS TO BE INTERLOCKED WITH LIGHTING CONTROLS. COORDINATE INSTALLATION WITH MECHANICAL CONTRACTOR AS NECESSARY. PROVIDE A 30A-2P HEAVY DUTY LIGHTING CONTRACTOR IN A NEMA 1 BOX LOCATED IN JOIST SPACE ABOVE WALL MOUNTED OCCUPANCY & CONTROL WITH SENSOR.

11 PROVIDE REGRESSED TWO GANG TELEVISION BOX WITH (1) DUPLEX RECEPTACLE AND (1) CAT 6 DATA JACKS FOR CEILING MOUNTED MENU BOARDS. CEILING MOUNT, LEGRAND PASS AND SEYMOUR #TV2MW.

12 PROVIDE DUPLEX RECEPTACLE AND (1) CAT 6 DATA JACK AT 84" AFF. PROVIDE A QUAD RECEPTACLE AT 52" AFF MOUNTED HORIZONTAL.

13 PROVIDE RECEPTACLE AT 96" A.F.F. OR ABOVE WINDOW FOR CONNECTION TO WEB CAMERAS.

14 ROOFTOP UNIT, VERIFY CONNECTIONS AND DISCONNECT SIZE PER NEC REQUIREMENTS A SHOWN.

15 RECEPTACLE IS PROTECTED BY A GFCI CIRCUIT BREAKER. PROVIDE LAMINATED TYPED LABEL "GFCI PROTECTED" ON COVER PLATE.

16 SEE MECHANICAL / PLUMBING DRAWINGS FOR ALL ELECTRICAL ROUGH-IN REQUIREMENTS & LOCATIONS. NOTIFY ARCHITECT IMMEDIATELY OF ANY DISCREPANCIES OF SCOPE BETWEEN THE MECHANICAL/PLUMBING & ELECTRICAL DRAWINGS **PRIOR** TO BID.

17 MOUNT (1) RECEPTACLE ON WALL 12" BELOW CEILING FOR WATER HEATER.

18 MOUNT RECEPTACLE ON WALL 60" BELOW CEILING FOR RECIRC PUMP.

19 PROVIDE WP J BOX FOR CONNECTION OF OUTDOOR CAMERA AT 9'-0" AFF. STUB 1/2" CONDUIT TO 6" X 6" VENTILATED BOX MOUNTED ABOVE CEILING. MOUNT RECEPTACLE IN BOX & INSTALL CAMERA POWER SUPPLY. RUN LOW VOLTAGE CABLE AND CONNECT CAMERA.

20 INSTALL FIXTURE POWER SUPPLY BELOW LOW COUNTER. INSTALL LED TAPE TO UPPER COUNTER FACING LOBBY. ROUTE 24V DC FIXTURE LEADS FROM TAPE & CONNECT TO POWER SUPPLY. CUT FIXTURE TO LENGTH OF COUNTER. PROVIDE (2) 96W POWER SUPPLIES / JUNCTION BOX & (2) 12' LENGTHS OF LED TAPE. MOUNT TAPE 2" FROM VERTICAL SURFACE OF DESK. DIODE LED #DI-24V-VLX7-35-12 FEET. POWER SUPPLY: #DI-0954-LPL. CONTROL FROM ROOM OCCUPANCY SENSOR.

21 NOTE NOT USED.

22 PROVIDE RECEPTACLE AT 102" AFF OR 2" BELOW THE CEILING (WHICHEVER IS LOWER) FOR CONNECTION TO WALL MOUNTED AIR FRESHENER. RECEPTACLE SHALL BE SWITCHED BY LOCAL OCCUPANCY SENSOR. PROVIDE A 30A/2P CONTACTOR TO CONTROL RECEPTACLE. MOUNT IN JOIST SPACE ABOVE SWITCHES & CONTROL CIRCUIT WITH ROOM OCCUPANCY SENSOR.

23 E.C. TO PROVIDE 10' SLACK CATEGORY 6 CABLE & MALE JACK ABOVE CEILING FOR WIRELESS ACCESS DEVICE. VERIFY POWER/CONNECTION REQUIREMENTS.

24 MOUNT RECEPTACLE CENTERED BETWEEN UPPER & LOWER COUNTER OF DESK.

25 RECEPTACLE CONTROLLED BY WALL SWITCH FOR WALL MOUNTED FAN. MOUNT RECEPTACLE 6" BELOW CEILING. ELECTRICAL CONTRACTOR TO PURCHASE & INSTALL FAN. CANARM #WMKD30. MOUNT FAN SO SAFETY CAGE IS 6" BELOW CEILING. **(NOTE NOT USED)**

26 PROVIDE REGRESSED TWO GANG TELEVISION BOX WITH DUPLEX RECEPTACLE AND (1) CAT 6 DATA JACK. LEGRAND PASS AND SEYMOUR #TV2MW FOR MONITOR.

27 STERIL-AIRE UNITS ARE FEED FROM SEPARATE CIRCUIT.

03-23-20

BRIAN M. SCHUTER
LICENSED PROFESSIONAL ENGINEER
48145
STATE OF MINNESOTA

ADA ARCHITECTS, INC.
17710 Detroit Avenue Lakewood, Ohio 44107
Phone (216) 521-5134 Fax (216) 521-4824
www.adaarchitects.cc

dogtopia

DOGTOPIA

2017 WOODLYNN AVENUE MAPLEWOOD, MN 55109

This document ("Instrument of Service") was prepared by ADA Architects, Inc. ("ADA") specifically for the referenced project and is not intended for any other use. ADA retains all common law, statutory and other reserved rights, including copyrights. This Instrument of Service shall not be used on other projects, for additions to this project or for completion of this project by others without ADA's prior written consent. Any unauthorized use of this Instrument of Service shall be at the user's sole risk and without liability to ADA. ADA makes no warranties, express or implied, of merchantability or of fitness for a particular purpose.

FRANCHISEE

LANG, BERT LLC

REVISIONS

#	DATE	TYPE
1		
2		
3		
4		
5		

POWER PLAN

DATE 03/23/20

JOB NO. 19492

E1.0

SHEET NO.

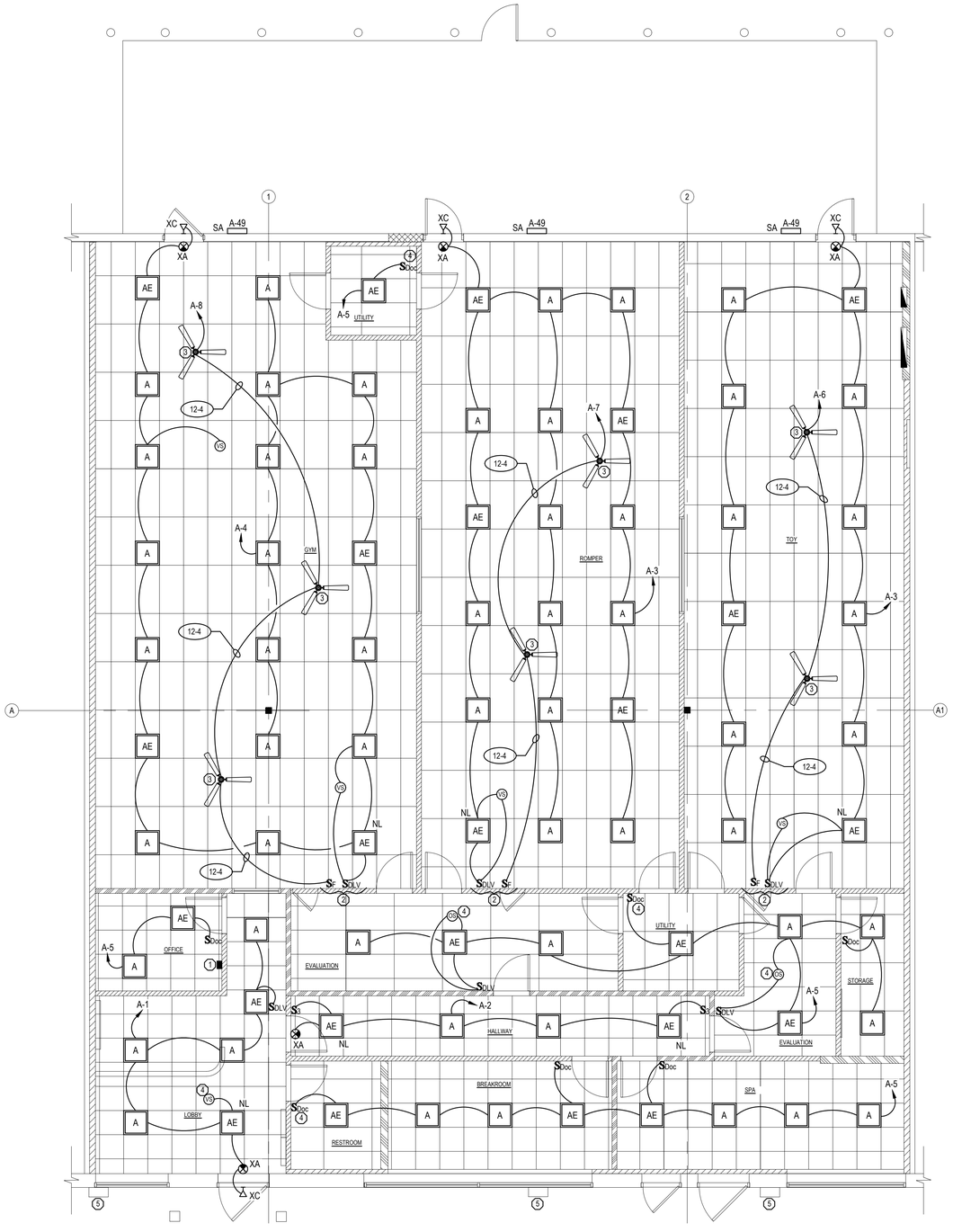

N

LIGHTING PLAN

SCALE 3/16" = 1'-0"

EMERGENCY AND NIGHT LIGHT NOTE

1. WHEN EMERGENCY LIGHTING FIXTURES ARE SHOWN THEY SHALL BE WIRED TO THE CIRCUIT NUMBER AS INDICATED. FURNISH AND INSTALL HANDLE LOCK ON CIRCUIT BREAKERS. EXIT SIGNS & NIGHT LIGHT CIRCUITS SHALL BYPASS ALL CONTROL. EM FIXTURES CONNECTED TO LOCAL LIGHTING CIRCUITS WITHOUT A 'NL' DESIGNATION SHALL BE CONTROLLED WITH LOCAL FIXTURES. AN EXTRA HOT CONDUCTOR OF THE SAME CIRCUIT SHALL BE INSTALLED TO BYPASS CONTROL FROM LOCAL SWITCHES, OCCUPANCY SENSORS OR LIGHTING CONTACTORS. SEE DETAILS ON SHEET E2.0.

SOUND ATTENUATION NOTE

ALL BOXES FOR RECEPTACLES, SWITCHES, COMMUNICATION DEVICES, AND FIRE ALARM DEVICES LOCATED IN ACOUSTICALLY SEALED WALLS (SEE ARCHITECTURAL DRAWINGS FOR WALL TYPES) SHALL HAVE THE BACK AND SIDES ENCAPSULATED BY FIRE PUTTY PADS (HILTI #CFS-P PA FIRE STOP PUTTY PADS OR STI #SSP PUTTY PADS).

GENERAL NOTES

A FOR EMERGENCY FIXTURES AE NOT SHOWN AS NIGHT LIGHTS, RUN AN EXTRA HOT CONDUCTOR (BYPASSING ALL CONTROL) AND CONNECT TO EMERGENCY BATTERY. FIXTURES SHALL BE SHUT OFF WITH LOCAL LIGHT FIXTURE CONTROL.

B ALL LIGHT FIXTURES WITH NO LETTER DESIGNATION ARE EXISTING TO REMAIN. CLEAN, RELAMP, REBALLAST & MAKE FIXTURE FULLY OPERATIONAL.

LIGHTING PLAN NOTES

01 TIME CLOCK OVERRIDE SWITCH.

02 MOUNT SWITCHES A MINIMUM OF 27" FROM DOOR ON WALL OPENING.

03 ELECTRICAL CONTRACTOR SHALL PURCHASE, WIRE & INSTALL CEILING FAN. SEE DETAIL THIS SHEET FOR SUGGESTED MOUNTING. FIELD CUT, RETHREAD & DRILL DOWN ROD SO THAT CEILING FAN IS MOUNTED AT 8'-6" AFF TO THE BOTTOM OF THE BLADES. CANARM #CP60HPWP.

04 UTILIZE SENSOR AS AN OCCUPANCY SENSOR. PROGRAM FOR 'ON' - 'OFF' CONTROL.

05 EXISTING EXTERIOR LIGHTS TO REMAIN. WIRED TO LANDLORD PANEL.

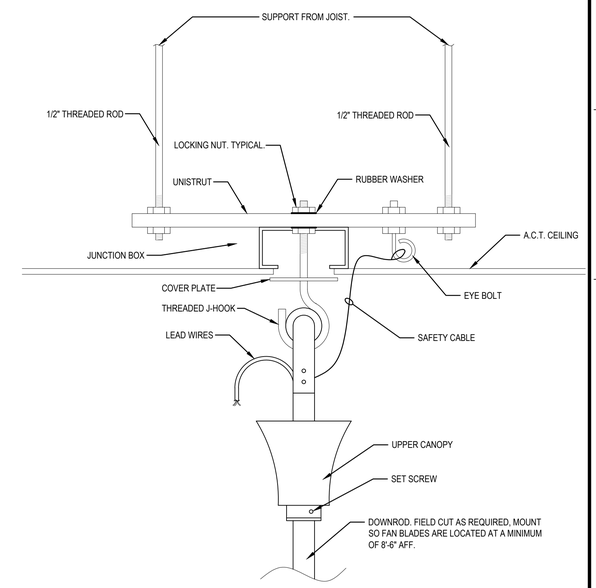

CEILING FAN MOUNTING & SUPPORT DETAIL

N.T.S.

03-23-20

BRIAN M. SCHUTER
LICENSED PROFESSIONAL ENGINEER
48145
STATE OF MINNESOTA

ADA ARCHITECTS, INC.
17710 Detroit Avenue Lakewood, Ohio 44107
Phone (216) 521-5134 Fax (216) 521-4824
www.adaarchitects.cc

dogtopia

DOGTOPIA

2017 WOODLYNN AVENUE MAPLEWOOD, MN 55109

This document ("Instrument of Service") was prepared by ADA Architects, Inc. ("ADA") specifically for the referenced project and is not intended for any other use. ADA retains all common law, statutory and other reserved rights, including copyrights. This Instrument of Service shall not be used on other projects, for additions to this project or for completion of this project by others without ADA's prior written consent. Any unauthorized use of this Instrument of Service shall be at the User's sole risk and without liability to ADA. ADA makes no warranties, express or implied, of merchantability or of fitness for a particular purpose.

FRANCHISEE

LANG, BERT LLC

REVISIONS

#	DATE	TYPE
1		
2		
3		
4		
5		

LIGHTING PLAN

DATE 03/23/20

JOB NO. 19492

E1.1

SHEET NO.

ELECTRICAL SYMBOL LEGEND

SYMBOL	DESCRIPTION
A-2 ——► A-2	HOMERUN TO PANEL "A" INDICATING CIRCUIT NUMBER(S) - ALL WIRING SHALL BE #12 WITH EQUIPMENT GROUND WIRE UON (INCREASE TO #10 FOR CIRCUITS OVER 100 FT.) - ALL HOMERUNS ARE TO A 20 AMPERE, 1 POLE CIRCUIT BREAKER U.O.N. - QUANITY OF CONDUCTORS AS NECESSARY TO ACCOMMODATE CIRCUITS AND CONTROL INDICATED. CROSS HATCHES INDICATE REQUIRED LIGHTING CONTROL U.O.N.
- - - - - - ►	CONDUIT RUN IN OR UNDER FLOOR SLAB (1" C. MINIMUM, UON)
—·—·—►	SCHEDULE 40 PVC CONDUIT RUN AT 36" BELOW FINISHED GRADE. CONTRACTOR SHALL BORE BELOW STREET. COORDINATE WITH CITY. TRANSITION TO HEAVYWALL RIGID STEEL CONDUIT 2 FEET BELOW GRADE WHEN CONDUIT IS TO RISE ABOVE GRADE.
S	SWITCH - 20 AMPERE, 120/277 VOLT, SINGLE POLE - MTD AT 46" AFF TO TOP UON ("a"=DENOTES SWITCHING,"K" = KEY OPERATED, "P" = PILOT LIGHT, "IL"= ILLUMINATED TOGGLE, "3" = THREE-WAY, "4" = FOUR-WAY, "MI"= MANUAL MOTOR STARTER.)
⊖	DUPLEX RECEPTACLE - 20 AMPERE, 125 VOLT - MOUNTED AT 15" AFF UON (TO BOTTOM). SUBSCRIPT "T" DENOTES TAMPER RESISTANT. C=WHITE RECEPTACLE & COVER MOUNTED FLUSH IN CEILING. IF CEILING IS MORE THEN 15" ABOVE TOP OF WINDOW MOUNT RECEPTACLES 12" ABOVE TOP OF WINDOW. IG= ISOLATED GROUND TYPE. TVSS= SURGE PROTECTED TYPE. **ALL EXTERIOR RECEPTACLES SHALL BE WEATHER RESISTANT LABELED 'WR'.**
⊕	DOUBLE DUPLEX RECEPTACLE - 20 AMPERE, 125 VOLT - MOUNTED AT 15" AFF UON (TO BOTTOM)
◫	DUPLEX RECEPTACLE MOUNTED IN A FLUSH FLOOR BOX. PROVIDE ALUMINUM DUAL FLIP LID ACTIVATION KIT.
(J)	JUNCTION BOX - MOUNTING HEIGHT AND SIZE AS REQUIRED BY CODE OR AS NOTED ON DRAWINGS
$(J)_S$	JUNCTION BOX - FOR SIGN. PROVIDE LOCAL DISCONNECT & COORDINATE LOCATION & MOUNTING HEIGHT WITH SIGN CONTRACTOR IN THE FIELD.
□	HEAVY DUTY NON FUSIBLE DISCONNECT SWITCH.
15 ⊠ A.F.	HEAVY DUTY FUSIBLE DISCONNECT SWITCH. FUSE SIZE TO BE DETERMINED FROM EQUIPMENT TO BE SERVED NAMEPLATE DATA
▽	FLUSH COMMUNICATIONS OUTLET WITH TWO GANG BOX SINGLE GANG EXTENSION RING, MOUNTED AT 15" AFF U.O.N. (TO BOTTOM) AND 1" CONDUIT, STUBBED TO NEAREST ACCESSIBLE CEILING. HOMERUN CAT 5E CABLE FROM OUTLET TO COMMUNICATIONS BACKBOARD. SEE SPECIFICATIONS FOR INSTALLATION REQUIREMENTS. W=MOUNTED 54" AFF.
$▽_D$	COMMUNICATION OUTLET MOUNTED IN A FLUSH FLOOR BOX. PROVIDE (4) JACKS AND AN ALUMINUM DUAL FLIP LID ACTIVATION KIT.
▼	SPECIAL NEMA CONFIGURED OUTLET MOUNTED AS REQUIRED TO SERVE APPLIANCE. VERIFY CONFIGURATION PRIOR TO ROUGH-IN AND ADJUST WIRING AND CIRCUIT BREAKER SIZE AS REQUIRED.
●GR ■	GROUND ROD- 3/4" X 10' COPPER CLAD
12-4	WIRE LEGEND TAG (12= CONDUCTOR SIZE, 4= QUANTITY OF CONDUCTORS.)
DD	DUCT MOUNTED SMOKE DETECTOR. SEE DETAIL THIS SHEET.
AFF	ABOVE FINISHED FLOOR
AC	INDICATES DEVICE MOUNTED AT 8" ABOVE COUNTER
BC	INDICATES DEVICE MOUNTED BELOW CABINET AT 18" AFF.
EC	ELECTRICAL CONTRACTOR
GFI	GROUND FAULT CIRCUIT INTERRUPTER TYPE
UON	UNLESS OTHERWISE NOTED
IG	ISOLATED GROUND
EX	EXISTING TO REMAIN
NL	NIGHT LIGHT
Soc a,b	WALL MOUNTED MULTI TECHNOLOGY DUAL CIRCUIT OCCUPANCY SENSOR WITH WHITE FINISH HUBBEL # LHMTD2WH
Soc	WALL MOUNTED MULTI TECHNOLOGY SINGLE CIRCUIT OCCUPANCY SENSOR WITH WHITE FINISH HUBBEL # LHMTS1WH
(VS)	CEILING MOUNTED VACANCY SENSOR / POWER PACK. WATTSTOPPER #DT300-BZ-250.
S_{Doc}	WALL MOUNTED 0-10V DIMMER SWITCH / OCCUPANCY SENSOR MOUNTED AT 46" TO TOP NEUTRAL REQUIRED. HUBBELL #LH2-IRS-N-WH
S_{DLv}	LOW VOLTAGE CONTROLLER WITH DIMMING CAPABILITY MOUNTED AT 46" TO TOP. WATTSTOPPER #DCLV2
(Ps)	INDOOR PHOTO SENSOR.
S_F	MULTIPLE CEILING FAN SPEED / REVERSE CONTROLLER MOUNTED AT 46" AFF TO TOP. CANARM #CNFRMC5
PS	INTEGRAL ROOM CONTROLLER PHOTO SENSOR
⊡	INTEGRAL ROOM CONTROLLER 4 BUTTON SWITCH
OS	INTEGRAL ROOM CONTROLLER OCCUPANCY SENSOR
(T)	120V THERMOSTAT. FOR LOW VOLTAGE THERMOSTAT SEE MECHANICAL DRAWINGS. MECHANICAL CONTRACTOR SHALL PROVIDE. ELECTRICAL CONTRACTOR SHALL WIRE & INSTALL 120V TSTATS, PROVIDE BACK BOX & 3/4" CONDUIT STUB FOR LOW VOLTAGE TSTATS.

ALL SENSORS SHALL BE INSTALLED AS VACANCY SENSORS REQUIRING MANUAL 'ON' CONTROL, SENSOR 'OFF' AFTER 10 MINUTES.

SEE DETAIL ON THIS DRAWING FOR DETAILS

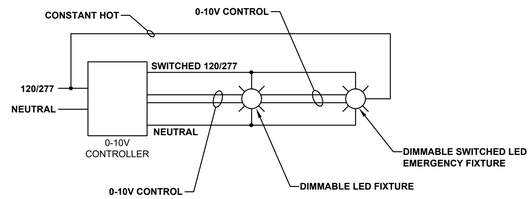

LED FIXTURE DIMMING SCHEMATICS
N.T.S.

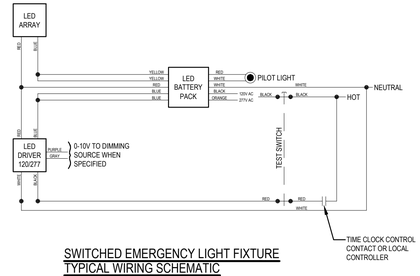

SWITCHED EMERGENCY LIGHT FIXTURE
TYPICAL WIRING SCHEMATIC
N.T.S.

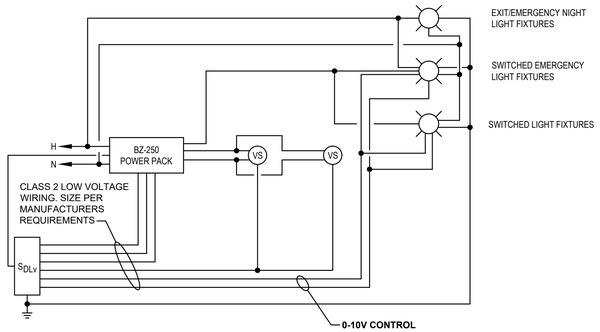

VACANCY / OCCUPANCY SENSOR WITH DIMMING CONTROL WIRING SCHEMATIC
N.T.S.

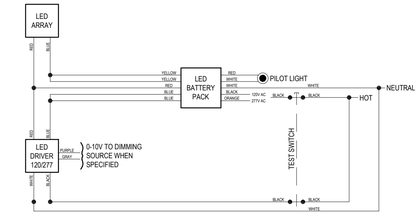

EMERGENCY NIGHT LIGHT FIXTURE
TYPICAL WIRING SCHEMATIC
N.T.S.

WIRE LEGEND

Tag	Fill	Tag	Fill	Tag	Fill
No Tag	(2) #12, #12GND-3/4"C	4-4	(4) #4, #4GND-1 1/4 "C	4/0-3	(3) #4/0, #2GND-2" C
12-3	(3) #12, #12GND-3/4"C	2-2	(2) #2, #4GND-1"C	4/0-4	(4) #4/0, #2GND-2 1/2"C
12-4	(4) #12, #12GND-3/4"C	2-3	(3) #2, #4GND-1 1/4 "C	300-2	(2) 300KCMIL, #1/0GND-2"C
10-2	(2) #10, #10GND-3/4"C	2-4	(4) #2, #4GND-1 1/4" C	300-3	(3) 300KCMIL, #1/0GND-21/2" C
10-3	(3) #10, #10GND-3/4"C	1-2	(2) #1, #4GND-1 1/4" C	300-4	(4) 300KCMIL, #1/0GND-2 1/2"C
10-4	(4) #10, #10GND-3/4"C	1-3	(3) #1, #4GND-1 1/4" C	350-2	(2) 350KCMIL, #3/0GND-2"C
8-2	(2) #8, #8GND-3/4"C	1-4	(4) #1, #4GND-1 1/2" C	350-3	(3) 350KCMIL, #3/0GND-2 1/2"C
8-3	(3) #8, #8GND-1"C	1/0-2	(2) #1/0, #2GND-1 1/4" C	350-4	(4) 350KCMIL, #3/0GND-3"C
8-4	(4) #8, #8GND-1"C	1/0-3	(3) #1/0, #2GND-1 1/2" C	500-2	(2) 500KCMIL, #3/0GND-2 1/2"C
6-2	(2)#6, #6GND-1"c	1/0-4	(4) #1/0, #2GND-2" C	500-3	(3) 500KCMIL, #3/0GND-3"C
6-3	(3) #6, #6GND-1"C	3/0-2	(2) #3/0, #2GND-1 1/2" C	500-4	(4) 500KCMIL, #3/0GND-3 1/2" C
6-4	(4) #6, #6GND-1"C	3/0-3	(3) #3/0, #2GND-2" C	600-2	(2) 600KCMIL, #3/0GND-3"C
4-2	(2) #4, #4GND-1"C	3/0-4	(4) #3/0, #2GND-2" C	600-3	(3) 600KCMIL, #3/0GND-3 1/2" C
4-3	(3) #4, #4GND-1"C	4/0-2	(2) #4/0, #2GND-2" C	600-4	(4) 600KCMIL, #3/0GND-3 1/2" C

NOTE: CONDUIT SIZES ARE FOR EMT & IMC. FOR PVC & RGC INCREASE CONDUIT BY (1) TRADE SIZE. FOR FLEXIBLE CONDUIT SIZES REFER TO NEC. ALL WIRE SIZES SHOWN ON DRAWINGS ARE FOR COPPER CONDUCTORS.

ALL EXISTING MAIN DISTRIBUTION AND BRANCH PANELS IN DOGTOPIA LEASE SPACE TO BE REMOVED.

CONTRACTOR SHALL COORDINATE ALL LOCAL REQUIREMENTS WITH REGARDS TO CONNECTING THE ELECTRICAL SERVICE. METER, CT BOXES, DISCONNECT SWITCHES ETC. SHALL BE PURCHASED & INSTALLED PER THE LOCAL POWER COMPANY REQUIREMENTS & AUTHORITY HAVING JURISDICTION. COORDINATION SHALL OCCUR WITHIN ***1 WEEK*** OF RECEIVING CONTRACT. INCLUDE IN BID ANY EXPEDITED SHIPPING CHARGES FOR ANY LONG LEAD ELECTRICAL DISTRIBUTION EQUIPMENT. COORDINATE ANY REQUIRED SERVICE SHUT DOWNS WITH LANDLORD.

EQUIVALENT TIME CLOCK SYSTEM.
TIME CLOCK: TORK# ELC-74
PHOTOCELL: TORK# EPCLC
OVERRIDE: TORK# LCS115M

CO-ORDINATE TIME CLOCK SETTINGS WITH OWNER. INTERIOR LOADS SHALL BE PROGRAMMED TO POWER UP 1 HOUR BEFORE AND POWER DOWN 1 HOUR AFTER CLOSE. EXTERIOR LOADS SHALL BE PROGRAMMED TO POWER UP AFTER DUSK AND POWER DOWN 2 HOURS AFTER CLOSE.

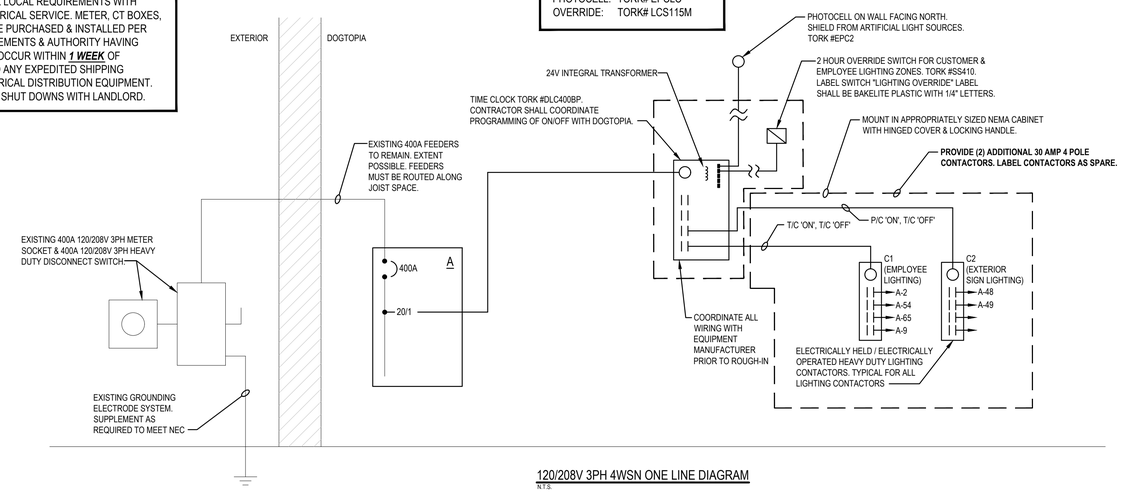

120/208V 3PH 4WSN ONE LINE DIAGRAM
N.T.S.

03-23-20

BRIAN M. SCHUER
LICENSED PROFESSIONAL ENGINEER
48145
STATE OF MINNESOTA

ADA ARCHITECTS, INC.
17710 Detroit Avenue Lakewood, Ohio 44107
Phone (216) 521-5134 Fax (216) 521-4824
www.adaarchitects.cc

dogtopia

DOGTOPIA

2017 WOODLYNN AVENUE MAPLEWOOD, MN 55109

This document ("Instrument of Service") was prepared by ADA Architects, Inc. ("ADA") specifically for the referenced project and is not intended for any other use. ADA retains all common law, statutory and other reserved rights, including copyrights. This Instrument of Service shall not be used on other projects, for additions to this project or for completion of this project by others without ADA's prior written consent. Any unauthorized use of this Instrument of Service shall be at the User's sole risk and without liability to ADA. ADA makes no warranties, express or implied, of merchantability or of fitness for a particular purpose.

FRANCHISEE
LANG, BERT LLC

REVISIONS

#	DATE	TYPE
1		
2		
3		
4		
5		

ONE LINE DIAGRAM & DETAILS

DATE 03/23/20

JOB NO. 19492

E2.0
SHEET NO.

A

MOUNTING: FLUSH
BUS RATING: 400A
400A MAIN CIRCUIT BREAKER
VOLTAGE: 120/208V-3PH-4W
COMMENTS: 2 SECTION PANEL

LOCATION: ELECTRIC
A.I.C.: 65,000
AMPS CONN.: 156.4
AMPS DEMAND.: 200.0

BREAKER REMARKS
C-CONTACTOR CONTROLLED, S-SHUNT TRIP, L-LOCK ON, G-GFCI, A-ARC FAULT, SW-SWITCHING DUTY, HA-HACR, HI-HID, F-RED HANDLE

CKT.	DESCRIPTION	KVA CONNECTED LTG.	REC.	HVAC	MISC.	C/B	REMARKS		C/B	KVA CONNECTED MISC.	HVAC	REC.	LTG.	DESCRIPTION	CKT
1	LIGHTING	0.4				20/1	-	C	20/1				0.3	CORR. LIGHTING	2
3	LIGHTING	0.9				20/1	-	-	20/1				0.6	LIGHTING	4
5	LIGHTING	0.6				20/1	-	-	20/1		0.3			CEILING FAN	6
7	CEILING FAN			0.3		20/1	-	-	20/1		0.3			CEILING FAN	8
9	CEILING RECEPTACLE		0.2			20/1	C	-	20/1			0.6		RECEPTACLE	10
11	RECEPTACLE		0.8			20/1	-	G	20/1	1.2				MICROWAVE	12
13	RECEPTACLE		0.2			20/1	-	-	20/1			0.6		RECEPTACLE	14
15	RECEPTACLE		0.2			20/1	-	G	20/1	0.8				REFRIGERATOR	16
17	SPARE	-				20/1	-	-	20/1	1.0				CAMERA SYSTEM	18
19	TELE RECEPTACLE		0.8			20/1	-	-	20/1				-	SPARE	20
21	TIME CLOCK				0.2	20/1	-	G	20/1	0.5				MONITOR/ RECEPTACLE	22
23	MINI FRIDGE				0.4	20/1	G	G	20/1	0.5				MONITOR/RECEPTACLE	24
25	MONITOR/RECEPTACLE				0.5	20/1	G	G	20/1	0.2				WH-1	26
27	AIR FRESHENER				0.4	20/1	G	-	20/1				-	SPARE	28
29	SPA RECEPTACLE		0.2			20/1	-	-	20/1				-	SPARE	30
31	WASHER				1.0	20/1	-	-	30/2	2.5				DRYER	32
33	RECEPTACLE		0.8			20/1	-	-		2.5					34
35	MENU BOARD				0.6	20/1	-	-	20/1			0.4		RECEPTACLE	36
37	OFFICE RECEPTACLE		0.6			20/1	-	-	20/1			0.2		RECEPTACLE	38
39	U/C REFRIGERATOR				0.6	20/1	G	-	20/1	1.2				COFFEE MAKER	40
41	OUTDOOR CAMERA				1.0	20/1	-	-	20/1				-	SPARE	42
43	RECEPTACLE		0.6			20/1	-	-	20/1	0.4				MONITORS	44
45	DUCT SMOKE DETECTOR				0.4	20/1	-	-	20/1			0.8		ROOF RECEPTACLE	46
47	CORD REEL				0.5	20/1	G	C	20/1				1.2	SIGN	48
49	OUTDOOR LIGHTING	0.2				20/1	C	-	20/1				-	SPARE	50
51	SPARE	-				20/1	-	-	20/1		0.1			EF-1,3	52
53	SPARE	-				20/1	-	C	20/1		0.1			EF-2	54
55				1.5			-	-			5.7				56
57	RTU-1			1.5		20/3	-	-	70/3		5.7			RTU-2	58
59				1.5			-	-			5.7				60
61	SPARE	-				20/1	-	-	15/2		2.5			DFC-1/DCU-1	62
63	SN-1,2,3	0.6				20/1	-	-			2.5				64
65	RP-1				0.4	20/1	G,C	-	20/1				-	SPARE	66
67	SPARE	-				20/1	-	-	20/1				-	SPARE	68
69	SPARE	-				20/1	-	-	20/1				-	SPARE	70
71	SPARE	-				20/1	-	-	20/1				-	SPARE	72
73	SPARE	-				20/1	-	-	20/1				-	SPARE	74
75	SPARE	-				20/1	-	-	20/1				-	SPARE	76
77	SPARE	-				20/1	-	-	20/1				-	SPARE	78
79		-					-	-					-		80
81	SPARE	-				70/3	-	-	20/3				-	SPARE	82
83		-					-	-					-		84
TOTALS		2.7	4.4	4.8	6.0					10.8	22.9	2.6	2.1	TOTALS	

LOAD	CONNECTED	DEMAND
LIGHTING	4.8	16.2
RECEPTACLE	7.0	7.0
HVAC	27.7	32.0
MISC	16.8	16.8

LIGHTING FIXTURE SCHEDULE

TYPE	LAMP	WATTS	DESCRIPTION	CATALOG NO.
A	LED 4000K	31	2'x2' RECESSED FLAT PANEL LED FIXTURE, UNIVERSAL VOLTAGE, STANDARD 0-10V DIMMING DRIVER.	LITHONIA# EPANL-22-34L-40K
AE	LED 4000K	31	2'x2' RECESSED FLAT PANEL LED FIXTURE, UNIVERSAL VOLTAGE, STANDARD 0-10V DIMMING DRIVER & EMERGENCY BATTERY PACK.	LITHONIA# EPANL-22-34L-40K-PS1055CP-FMC-BRKT
B	LED 4000K	31	1'X4' LED STRIP FIXTURE, UNIVERSAL VOLTAGE WITH STANDARD 0-10V DIMMING	LITHONIA ZL1D-L48-5000LM-FST-MVOLT-40K-80CRI-WH
BE	LED 4000K	31	1'X4' LED STRIP FIXTURE, UNIVERSAL VOLTAGE WITH STANDARD 0-10V DIMMING & EMERGENCY BATTERY PACK	LITHONIA ZL1D-L48-5000LM-FST-MVOLT-40K-80CRI-E7W-WH
XA	LED	5	UNIVERSAL MOUNTED POLY CARBONATE EXIT SIGN WITH BLACK FINISH, BATTERY BACK-UP & 6" HIGH RED LETTERS. DARKENED QUADRANTS INDICATE SIDES WITH FACES.	LITHONIA# LQM-S3R-120/277
XB	LED	5	UNIVERSAL MOUNTED BATTERY OPERATED EMERGENCY LIGHT FIXTURE.	LITHONIA# ELM4L
XC	(4) LED	5	EXTERIOR WALL MOUNTED REMOTE EMERGENCY LIGHT FIXTURE WITH INTEGRAL BATTERY.	DUAL-LITE# PG-Z-HTR
XD	(3) LED	5	CEILING MOUNTED EXTERIOR EMERGENCY LIGHT FIXTURE	DUAL-LITE# DYNR-D-4X
SA	LED	58	EXTERIOR WALL MOUNTED LED WALL PACK, WITH MOTION SENSOR.	LUMARK# XTOR6B-W-MS-L20

MECHANICAL EQUIPMENT SCHEDULE

MARK	DESCRIPTION	LOAD	VOLTAGE & PHASE	PANEL	CIRCUIT	C.B.	WIRE	NOTES
RTU-1	ROOF TOP UNIT	16 MCA	208V-3PH	A	55,57,59	20/3	10-3	1,3
RTU-2	ROOF TOP UNIT	59.9 MCA	208V-3PH	A	56,58,60	70/3	4-3	1,3
SN-1	STERIL-AIRE UNIT	110.0 W	120V-1PH	A	63	20/1	12-2	1,3
SN-2	STERIL-AIRE UNIT	110.0 W	120V-1PH	A	63	20/1	12-2	1,3
SN-3	STERIL-AIRE UNIT	110.0 W	120V-1PH	A	63	20/1	12-2	1,3
WH-1	WATER HEATER	0.3 KW	120V/1PH	A	26	20/1	12-2	1,12
RP-1	RECIRC PUMP	1/12 HP	120V-1PH	A	65	20/1	12-2	1,12
EF-1	EXHAUST FAN #1	0.2 KW	115V-1PH	A	52	20/1	12-2	1,3,8
EF-2	EXHAUST FAN #2	0.2 KW	115V-1PH	A	54	20/1	12-2	1,3,5
EF-3	EXHAUST FAN #3	0.2 KW	115V-1PH	A	52	20/1	12-2	1,3,8
DCU-1	DUCTLESS SPLIT	9 MCA	208V-1PH	A	62,64	15/2	10-2	1,2,11
DCF-1	DUCTLESS SPLIT	9 MCA	208V-1PH	A	62,64	15/2	10-2	1,2,11

MECHANICAL EQUIPMENT SCHEDULE NOTES:

1. VERIFY LOAD, LOCATION AND CONNECTION REQUIREMENTS WITH MECHANICAL & PLUMBING DESIGN DRAWINGS, SHOP DRAWINGS, AND MECHANICAL & PLUMBING CONTRACTOR IN THE FIELD. ADJUST CONNECTION DEVICE, MOUNTING HEIGHT, WIRE, CONDUIT AND CIRCUIT BREAKER AS REQUIRED IN ORDER TO POWER THE EQUIPMENT. COORDINATE WITH THE EQUIPMENT INSTALLING CONTRACTOR PRIOR TO ROUGH-IN.

2. PROVIDE A LOCAL NEMA 3R HEAVY DUTY NON FUSED DISCONNECT SWITCH SIZED PER EQUIPMENT NAMEPLATE DATA.

3. PROVIDE A LOCAL NEMA 3R HEAVY DUTY FUSED DISCONNECT SWITCH SIZED AND FUSED PER EQUIPMENT NAMEPLATE DATA.

4. PROVIDE A LOCAL NEMA 1 MANUAL MAGNETIC MOTOR STARTER. SIZE OVERLOADS PER EQUIPMENT REQUIREMENTS.

5. CONTROL CIRCUIT WITH TIME CLOCK AND WALL SWITCH.

6. INTEGRAL DISCONNECT SWITCH & GFCI SERVICE RECEPTACLE, ELECTRICAL CONTRACTOR TO PROVIDE POWER.

7. PROVIDE A LOCAL COMBINATION MAGNETIC MOTOR STARTER / DISCONNECT SWITCH.

8. CONTROL WITH ROOM LIGHTING CONTROL.

9. WIRE TO WALL SWITCH.

10. CONTROL WITH 120 VOLT TSTAT.

11. PROVIDE POWER AND CONTROL WIRING BETWEEN UNITS FOR A COMPLETE OPERATIONAL SYSTEM.

12. PROVIDE RECEPTACLE FOR UNIT CORD AND PLUG.

03-23-20

BRIAN M. SCHUTER
LICENSED PROFESSIONAL ENGINEER
48145
STATE OF MINNESOTA

ADA ARCHITECTS, INC.
17710 Detroit Avenue Lakewood, Ohio 44107
Phone (216) 521-5134 Fax (216) 521-4824
www.adaarchitects.cc

dogtopia

DOGTOPIA

MAPLEWOOD, MN 55109

2017 WOODLYNN AVENUE

This document ("Instrument of Service") was prepared by ADA Architects, Inc. ("ADA") specifically for the referenced project and is not intended for any other use. ADA retains all common law, statutory and other reserved rights, including copyrights. This instrument of Service shall not be used on other projects, for additions to this project or for completion of this project by others without ADA's prior written consent. Any unauthorized use of this instrument of Service shall be at the User's sole risk and without liability to ADA. ADA makes no warranties, express or implied, of merchantability or of fitness for a particular purpose.

FRANCHISEE
LANG, BERT LLC

REVISIONS

#	DATE	TYPE
1		
2		
3		
4		
5		

LIGHTING & PANEL SCHEDULES

DATE 03/23/20
JOB NO. 19492

E2.1
SHEET NO.