RAMSEY COUNTY PUBLIC WORKS DEPARTMENT
CITY OF MAPLEWOOD

CONSTRUCTION PLANS FOR

WHITE BEAR AVENUE (CSAH 65) & GERVAIS AVENUE IMPROVEMENTS

GRADING, AGGREGATE BASE, BITUMINOUS SURFACING, ADA IMPROVEMENTS, CONCRETE WALK, BITUMINOUS TRAIL, UTILITY IMPROVEMENTS, TRAFFIC SIGNALS, SIGNING, AND PAVEMENT MARKING

LOCATED ON GERVAIS AVENUE FROM 650' WEST OF CSAH 65 TO CSAH 65 (WHITE BEAR AVENUE)
LOCATED ON CSAH 65 FROM 550' NORTH OF GERVAIS AVENUE TO 750' NORTH OF GERVAIS AVENUE
SEC 11, TWP 29N, R 22W

LEGEND

- MANHOLE
- HYDRANT
- WATER VALVE
- WATER SERVICE
- SANITARY MANHOLE
- STORM MANHOLE
- CATCH BASIN
- FLARED END SECTION
- HANDHOLE
- LIGHT
- POWER POLE
- GUY WIRE
- GAS VALVE
- PUSH BUTTON WALK
- TRAFFIC SIGNAL
- RAILROAD CROSSING SIGNAL
- COMMUNICATION MANHOLE
- SIGN
- TREE/SHRUB
- SANITARY SEWER
- STORM SEWER
- WATERMAIN
- OVERHEAD ELECTRIC
- OVERHEAD UTILITY
- GAS LINE
- UNDERGROUND ELECTRIC
- COMMUNICATIONS LINE
- FENCE
- GUARDRAIL
- EDGE OF WATER
- EDGE OF GRAVEL
- SECTION CORNER
- PARCEL BOUNDARY
- EXISTING RIGHT OF WAY
- PERMANENT EASEMENT
- TEMPORARY EASEMENT

GERVAIS AVENUE (STA. 21+09.55 TO 25+38.89)

GROSS LENGTH	1192.68	FEET	0.226	MILES
BRIDGES LENGTH	N/A	FEET	N/A	MILES
EXCEPTIONS LENGTH	N/A	FEET	N/A	MILES
NET LENGTH	1192.68	FEET	0.226	MILES

DESIGN DESIGNATION
Functional Classification: MINOR COLLECTOR
No. of Traffic Lanes = 4 — No. of Parking Lanes = 0
ADT (Current Year) 2020 = 4,650 — Design Speed 30 mph
ADT (Future Year) 2040 = ____ — Based on STOPPING Sight Distance
DHV (Design Hr. Vol.) = ____ — Height of Eye 3.5' Height of Object 2.0'
D (Directional Distr.) = ____ — Design Speed not achieved at: N/A
T (Heavy Commercial) = ____ — STA. N/A to STA. N/A MPH N/A
R-Value ____ 20 YR BESALS ____ Design Load 10 ton

WHITE BEAR AVENUE (CSAH 65) (STA. 73+88.55 TO 75+69.68)

GROSS LENGTH	1192.68	FEET	0.226	MILES
BRIDGES LENGTH	N/A	FEET	N/A	MILES
EXCEPTIONS LENGTH	N/A	FEET	N/A	MILES
NET LENGTH	1192.68	FEET	0.226	MILES

DESIGN DESIGNATION
Functional Classification: MINOR AUGMENTOR
No. of Traffic Lanes = 2 — No. of Parking Lanes = 0
ADT (Current Year) 2020 = 23,500 — Design Speed 40 mph
ADT (Future Year) 2040 = ____ — Based on STOPPING Sight Distance
DHV (Design Hr. Vol.) = ____ — Height of Eye 3.5' Height of Object 2.0'
D (Directional Distr.) = ____ — Design Speed not achieved at: N/A
T (Heavy Commercial) = ____ — STA. N/A to STA. N/A MPH N/A
R-Value ____ 20 YR BESALS ____ Design Load 10 ton

END WHITE BEAR PROJECT STA 75+69.68

BEGIN WHITE BEAR PROJECT STA 73+88.55

END GERVAIS PROJECT STA 25+38.89

BEGIN GERVAIS PROJECT STA 21+09.55

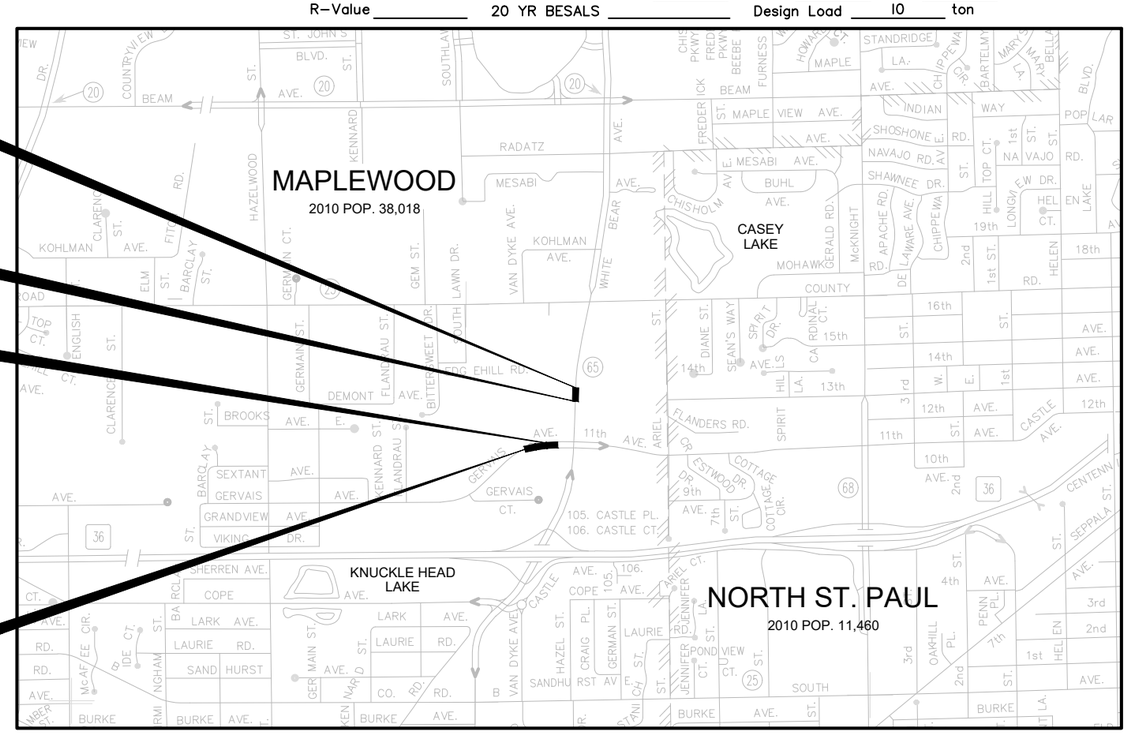

NOTE:

THE PLAN INDICATES THE GENERAL LOCATION OF KNOWN UTILITIES ON THE PROJECT. ALL UTILITY LOCATIONS ARE APPROXIMATE. PRIOR TO CONSTRUCTION THE CONTRACTOR SHALL VERIFY ALL UNDERGROUND UTILITY LOCATIONS AND ELEVATIONS WITH THE UTILITY COMPANIES.

THE SUBSURFACE UTILITY INFORMATION IN THIS PLAN IS UTILITY QUALITY LEVEL C. THIS QUALITY LEVEL WAS DETERMINED ACCORDING TO THE GUIDELINES OF CI/ASCE 38-02, ENTITLED "STANDARD GUIDELINES FOR THE COLLECTION AND DEPICTION OF EXISTING SUBSURFACE UTILITY DATA".

SCALES

INDEX MAP	2000'
GENERAL LAYOUT	150'
ALIGNMENT	150'
PLAN	50'
PROFILE	50'
CROSS SECTIONS	50'

N

PROJECT LOCATION
COUNTY: RAMSEY
CITY: MAPLEWOOD

GOVERNING SPECIFICATIONS

THE 2018 EDITION OF THE MINNESOTA DEPARTMENT OF TRANSPORTATION "STANDARD SPECIFICATIONS FOR CONSTRUCTION" SHALL GOVERN.

ALL TRAFFIC CONTROL DEVICES AND SIGNING SHALL CONFORM TO THE LATEST EDITION OF THE "MINNESOTA MANUAL ON UNIFORM TRAFFIC CONTROL DEVICES" (MN MUTCD) INCLUDING THE LATEST "FIELD MANUAL FOR TEMPORARY TRAFFIC CONTROL ZONE LAYOUTS".

SHEET INDEX

SHEET NO.	DESCRIPTION
1	TITLE SHEET
2	GENERAL LAYOUT
3	STATEMENT OF ESTIMATED QUANTITIES
4	CONSTRUCTION AND SOILS NOTES
5 – 6	TYPICAL SECTIONS
7 – 22	STANDARD PLATES AND PLANS
23 – 24	ALIGNMENT PLAN
25	INPLACE TOPOGRAPHY & REMOVAL PLAN
26	CONSTRUCTION PLAN
27 – 28	INTERSECTION DETAILS
29	EROSION CONTROL AND TURF ESTABLISHMENT PLAN
30 – 37	SIGNING AND PAVEMENT MARKINGS PLAN
38 – 49	SIGNAL PLAN
50 – 51	CROSS SECTIONS

Received
by City of Maplewood
on April 27, 2020

THIS PLAN CONTAINS 51 SHEETS

ALLIANT

SIGNATURE: ____ NAME: SEAN M. JOHNSTON

DESIGN ENGINEER: I HEREBY CERTIFY THAT THIS PLAN WAS PREPARED BY ME OR UNDER MY DIRECT SUPERVISION, AND THAT I AM A DULY LICENSED PROFESSIONAL ENGINEER UNDER THE LAWS OF THE STATE OF MINNESOTA.

XX/XX/2020 LICENSE NUMBER: 52701

____ DATE: ____
APPROVED: RAMSEY COUNTY ENGINEER

____ DATE: ____
APPROVED: CITY OF MAPLEWOOD ENGINEER

RAMSEY COUNTY
WHITE BEAR AVENUE (CSAH 65) & GERVAIS AVENUE IMPROVEMENTS

1:27:22 PM
4/23/2020
c:\pw_working\projectwise\alliant\d0135718\cd200052-tsh.dwg

SHEET TITLE		SHEET VIEW				
		1	2	3	4	5
INPLACE TOPOGRAPHY & REMOVAL PLAN	PLAN SHEET NO.			25		25
CONSTRUCTION PLAN	PLAN SHEET NO.			26		26
EROSION CONTROL AND TURF ESTABLISHMENT PLAN	PLAN SHEET NO.			29		29
SIGNING AND PAVEMENT MARKINGS PLAN	PLAN SHEET NO.	33	34	35	36	37

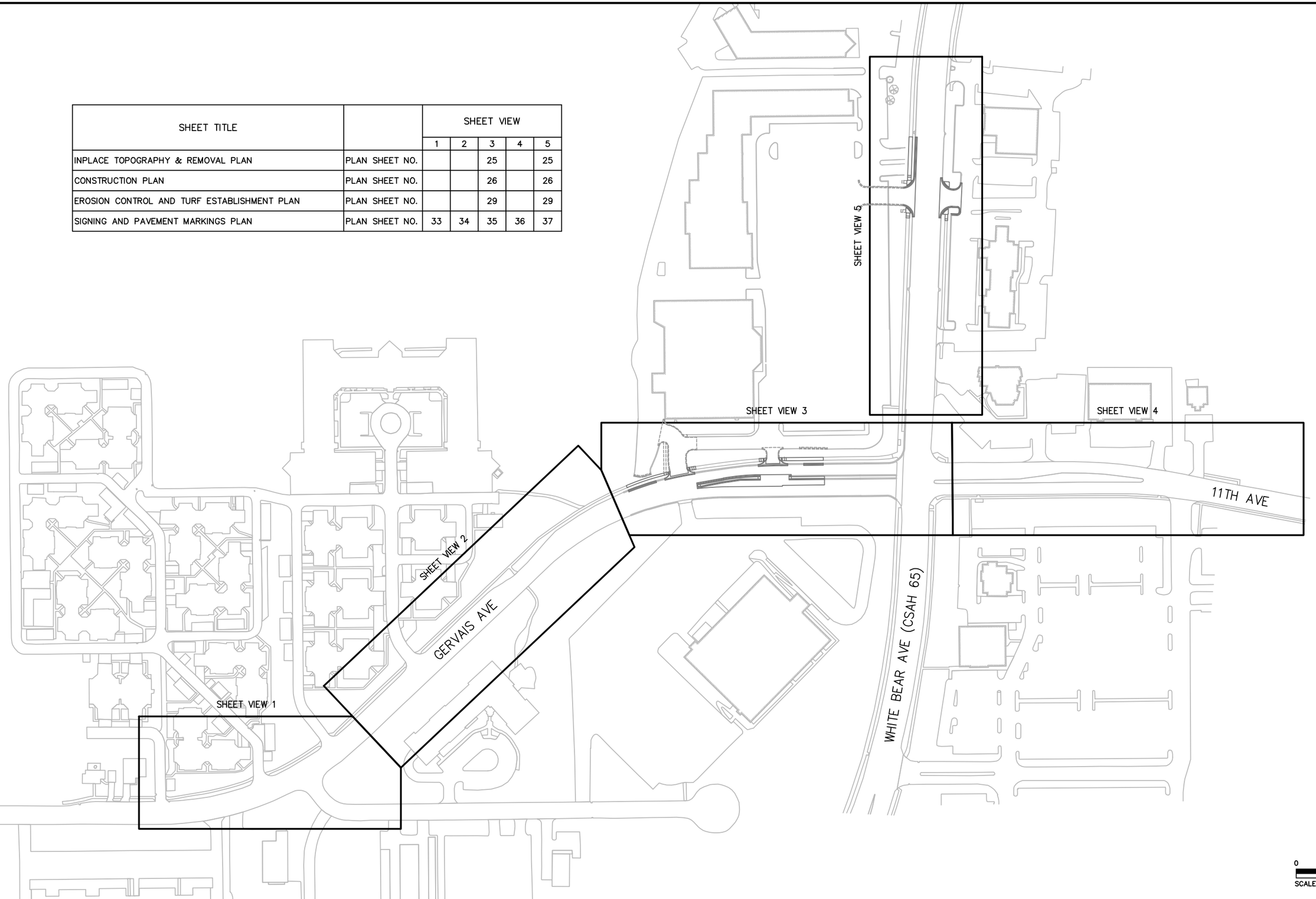

1:27:28 PM
4/23/2020
c:\pw_working\projectwise\alliant\d0135718\cd200052-gla.dwg

NO	DATE	DWN	CKD	REVISIONS

ALLIANT

I HEREBY CERTIFY THAT THIS SHEET WAS PREPARED BY ME OR UNDER MY DIRECT SUPERVISION AND THAT I AM A DULY LICENSED PROFESSIONAL ENGINEER UNDER THE LAWS OF THE STATE OF MINNESOTA.

PRINT NAME: SEAN M. JOHNSTON

SIGNATURE:

DATE XX/XX/2020 LICENSE # 52701

GENERAL LAYOUT

RAMSEY COUNTY
WHITE BEAR AVENUE (CSAH 65) & GERVAIS AVENUE IMPROVEMENTS

SHEET NO. 2 OF 51 SHEETS

STATEMENT OF ESTIMATED QUANTITIES

ITEM NO	DESCRIPTION	UNITS	TOTAL ESTIMATED QUANTITY
2021.501	MOBILIZATION	LUMP SUM	1
2102.503	PAVEMENT MARKING REMOVAL	LIN FT	3000
2102.518	PAVEMENT MARKING REMOVAL	SQ FT	1030
2104.502	REMOVE MARKER	EACH	1
2104.502	REMOVE SIGN TYPE C	EACH	15
2104.502	SALVAGE HYDRANT	EACH	1
2104.503	SAWING CONCRETE PAVEMENT (FULL DEPTH)	LIN FT	61
2104.503	SAWING BIT PAVEMENT (FULL DEPTH)	LIN FT	1113
2104.503	REMOVE CURB & GUTTER	LIN FT	1107
2104.504	REMOVE CONCRETE DRIVEWAY PAVEMENT	SQ YD	245
2104.504	REMOVE BITUMINOUS PAVEMENT	SQ YD	654
2104.518	REMOVE BITUMINOUS WALK	SQ FT	710
2104.518	REMOVE CONCRETE WALK	SQ FT	4610
2106.507	EXCAVATION – COMMON (P)	CU YD	470
2106.507	COMMON EMBANKMENT (CV) (P)	CU YD	85
2211.507	AGGREGATE BASE (CV) CLASS 5	CU YD	370
2302.602	DRILL & GROUT REINF BAR (EPOXY COATED)	EACH	60
2357.506	BITUMINOUS MATERIAL FOR TACK COAT	GALLON	165
2360.509	TYPE SP 9.5 WEARING COURSE MIX (2,B)	TON	12
2360.509	TYPE SP 12.5 WEARING COURSE MIX (3,B)	TON	125
2360.509	TYPE SP 12.5 NON WEAR COURSE MIX (3,B)	TON	125
2504.602	INSTALL HYDRANT	EACH	1
2504.602	ADJUST GATE VALVE & BOX	EACH	1
2506.502	ADJUST FRAME & RING CASTING	EACH	2
2521.518	4" CONCRETE WALK	SQ FT	1928
2521.518	6" CONCRETE WALK	SQ FT	1063
2531.503	CONCRETE CURB & GUTTER DESIGN B612	LIN FT	50
2531.503	CONCRETE CURB & GUTTER DESIGN B624	LIN FT	788
2531.604	7" CONCRETE VALLEY GUTTER	SQ YD	512
2531.618	TRUNCATED DOMES	SQ FT	208
2563.601	TRAFFIC CONTROL (1)	LUMP SUM	1
2564.502	OBJECT MARKER TYPE X4–2	EACH	3
2564.518	SIGN PANELS TYPE C	SQ FT	159
2565.516	TRAFFIC CONTROL SIGNAL SYSTEM	SYSTEM	1
2565.616	REVISE SIGNAL SYSTEM	SYSTEM	1
2573.502	STORM DRAIN INLET PROTECTION	EACH	9
2574.508	FERTILIZER TYPE 3	POUND	35
2575.505	SEEDING	ACRE	0.1
2575.508	SEED MIXTURE 25–151	POUND	12
2575.508	HYDRAULIC STABILIZED FIBER MATRIX	POUND	300
2582.503	4" SOLID LINE MULTI COMP (WR)	LIN FT	5000
2582.503	8" SOLID LINE MULTI COMP (WR)	LIN FT	200
2582.503	4" BROKEN LINE MULTI COMP (WR)	LIN FT	300
2582.503	4" DOTTED LINE MULTI COMP (WR)	LIN FT	50
2582.503	8" DOTTED LINE MULTI COMP (WR)	LIN FT	66
2582.503	4" DBLE SOLID LINE MULTI COMP (WR)	LIN FT	1700
2582.503	24" SOLID LINE MULTI COMP GR IN (WR)	LIN FT	200
2582.518	PAVT MSSG MULTI COMP GR IN	SQ FT	232
2582.518	CROSSWALK MULTI COMP	SQ FT	540

NOTES:
(P) DENOTES PLAN QUANTITY ITEM
(1) CONTRACTOR TO DEVELOP TRAFFIC COTNROL PLAN FOR APPROVAL BY THE ENGINEER.

CONSTRUCTION/SOILS NOTES

1. USE OF THE WORD "INCIDENTAL" IN THESE CONSTRUCTION DOCUMENTS WILL BE CONSIDERED TO MEAN WORK FOR WHICH NO DIRECT COMPENSATION WILL BE MADE.
2. IN PERMANENT AREAS OF CONSTRUCTION WHERE TURF ESTABLISHMENT IS REQUIRED, PROVIDE FOR A MINIMUM DEPTH OF 6-INCH ORGANIC TOPSOIL BORROW. QUANTITY OF TOPSOIL BORROW IS INCLUDED IN COMMON EMBANKMENT.
3. TOPSOIL STRIPPED AS PART OF THE PROJECT WILL BECOME PROPERTY OF THE CONTRACTOR. EROSION CONTROL METHODS FOR PROTECTING TOPSOIL STOCKPILES WILL BE THE CONTRACTORS RESPONSIBILITY. EXCESS TOPSOIL WILL BE REMOVED AND DISPOSED OF OUT SIDE THE PROJECT LIMITS AT NO ADDITIONAL COST TO THE COUNTY.
4. WHEN REMOVING PAVEMENTS, FULL-DEPTH SAWCUTS SHOULD BE MADE PERPENDICULAR TO THE ROADWAY CENTERLINE.
5. EXCESS EXCAVATION MATERIALS SHALL BECOME THE PROPERTY OF THE CONTRACTOR. DISPOSAL OF EXCESS EXCAVATED MATERIAL SHALL BE IN ACCORDANCE WITH MNDOT STANDARD SPECIFICATION 2105.3I AND SHALL BE DISPOSED OF OFF THE RIGHT OF WAY, AT NO ADDITIONAL COMPENSATION, AND IN ACCORDANCE WITH ALL LOCAL, STATE, AND FEDERAL REGULATIONS.
6. CONTRACTOR SHALL PROVIDE FOR REMOVAL AND DISPOSAL (OUTSIDE THE CONSTRUCTION ZONE) OF INPLACE STRUCTURES THAT WILL INTERFERE WITH CONSTRUCTION. DISPOSAL OF ITEMS REMOVED UNDER THIS CONTRACT WILL BE IN ACCORDANCE WITH THE REQUIREMENTS OF 2104.3C3 AND 2105.3D.
7. NO EXTRA PAYMENT WILL BE MADE FOR TEMPORARY STOCKPILING OF EXCAVATION AND EMBANKMENT MATERIAL.
8. GRADING GRADE IS DEFINED AS THE BOTTOM OF THE CLASS 6 AGGREGATE BASE MATERIALS (MNDOT STANDARD SPECIFICATION 2106.1A.6).
9. GRANULAR EMBANKMENT SHALL MEET THE REQUIREMENTS OF MNDOT STANDARD SPECIFICATION 3149.2B1.
10. SELECT GRANULAR EMBANKMENT SHALL MEET THE REQUIREMENTS OF MNDOT STANDARD SPECIFICATION 3149.2B2.
11. EXCAVATION AND EMBANKMENT CONSTRUCTION SHALL MEET THE REQUIREMENTS OF MNDOT STANDARD SPECIFICATION 2106.
12. WHERE MATCHING TO INPLACE INTERSECTING PAVEMENT STRUCTURES, CUT VERTICALLY TO THE BOTTOM OF THE INPLACE SURFACING OR TOP OF THE PROPOSED GRADING GRADE, WHICHEVER IS DEEPER, THEN TAPER AT 1:2 (V:H) TO THE BOTTOM OF THE RECOMMENDED SUBGRADE EXCAVATION AT THAT LOCATION.
13. WHERE MATCHING TO INPLACE ROADWAYS AT THE TERMINI OF PROPOSED NEW CONSTRUCTION CUT VERTICALLY TO THE BOTTOM OF THE INPLACE SURFACING OR TO THE TOP OF THE PROPOSED GRADING GRADE, WHICHEVER IS DEEPER, THEN TAPER AT 1:20 (V:H) TO THE BOTTOM OF THE RECOMMENDED SUBGRADE EXCAVATION AT THAT LOCATION.
14. SEE COMPACTION CRITERIA TABLE BELOW FOR COMPACTION TESTING METHOD REQUIRED FOR AGGREGATE AND EMBANKMENT CONSTRUCTION.
15. COMPACTION OF BITUMINOUS SURFACE ITEMS WILL BE ACCOMPLISHED IN ACCORDANCE WITH SPEC 2360.3D1 "MAXIMUM DENSITY METHOD".
16. STORM SEWERS CONNECTING TO MANHOLES AND CATCH BASINS SHALL BE IN ACCORDANCE WITH MNDOT STANDARD SPECIFICATION 2503. BEDDING AND BACKFILL SHALL CONFORM TO DETAIL SHOWN IN PLAN.
17. WHERE UNSUITABLE MATERIAL IS ENCOUNTERED DURING COMMON OR SUBGRADE EXCAVATION, THE CONTRACTOR SHALL PLACE SELECT GRANULAR EMBANKMENT AS DIRECTED BY THE ENGINEER.
18. STABILIZING AGGREGATE WILL BE APPLIED IF NECESSARY TO ACHIEVE SATISFACTORY SURFACE STABILITY AS DETERMINED BY THE ENGINEER. THE MATERIAL WILL SATISFY THE REQUIREMENTS OF SECTION 3149.2C AND WILL BE APPLIED IN ACCORDANCE WITH SECTION 2105.3G OF THE STANDARD SPECIFICATIONS.
19. THE TOP OF BACKSLOPES AND THE TOE OF FILL SLOPES SHALL BE ROUNDED TO NATURALIZE THE CONSTRUCTION EVEN THOUGH THE CROSS SECTIONS DO NOT SHOW ANY SUCH ROUNDING.
20. THE CONSTRUCTION LIMITS AS SHOWN IN THE PLANS REPRESENT THE POINT OF INTERSECTION BETWEEN THE REQUIRED FILL OR CUT SLOPE AND THE EXISTING GROUNDLINE AS DEPICTED ON THE CROSS SECTIONS. THE CONSTRUCTION LIMITS DO NOT INCLUDE AREAS REQUIRED FOR SLOPE ROUNDING.
21. IF ORGANIC SOILS OR UNSTABLE SOILS ARE PRESENT, THESE SOILS SHALL BE REMOVED FROM THE CRITICAL SUBGRADE ZONE, WHICH IS DEFINED AS THE SUBGRADE PORTION BENEATH AND WITHIN THREE VERTICAL FEET OF THE TOP OF THE SUBGRADE. THE SELECT GRANULAR LAYER IS THE UPPER PORTION OF THE CRITICAL SUBGRADE ZONE.
22. A COMPACTION SUBCUT IS REQUIRED FOLLOWING THE REMOVAL OF ORGANIC OR UNSTABLE SOILS. COMPACTION SUBCUT IS THE CONSTRUCTION OF A UNIFORM THICKNESS SUBCUT BELOW A DESIGNATED GRADE TO PROVIDE UNIFORMITY AND COMPACTION WITHIN THE SUBCUT ZONE. THE SUBCUT BOTTOM MUST BE EXPOSED TO ALLOW BOTTOM SHAPING AND COMPACTION. COMPACTION SUBCUT INCLUDES SCARIFYING THE EXPOSED SOILS TO A DEPTH OF 12 INCHES, MOISTURE CONDITIONING, AND COMPACTING THE SOILS. THE REPLACEMENT FILL SHALL MEET THE REQUIREMENTS OF SELECT COMMON EMBANKMENT.
23. THE CONTRACTOR IS HEREBY REMINDED OF HIS RESPONSIBILITY UNDER STATE LAW TO CONTACT ALL UTILITIES THAT MAY HAVE FACILITIES IN THE AREA. CONTACT MUST BE MADE THROUGH GOPHER STATE ONE-CALL.
24. CERTAIN RELOCATION OF EXISTING UTILITIES WILL BE REQUIRED AS A RESULT OF THIS PROJECT. IT SHALL BE THE CONTRACTOR'S RESPONSIBILITY TO IDENTIFY POTENTIAL UTILITY CONFLICTS, VERIFY UTILITY CONFLICTS, AND COORDINATE WITH THE RESPECTIVE UTILITY COMPANIES TO AVOID UNNECESSARY DELAYS. NO COMPENSATION WILL BE MADE FOR DELAYS ASSOCIATED WITH THE CONTRACTOR'S FAILURE TO ADEQUATELY COORDINATE WITH UTILITY COMPANIES.
25. WATER, GAS, ELECTRIC, TELEPHONE, SEWER, AND T.V. CABLE LINES SHOWN ON THE DRAWINGS AND CROSS-SECTIONS ARE PLOTTED FROM THE BEST INFORMATION AVAILABLE AT THE TIME OF PLAN PREPARATION, BUT MAY NOT REFLECT ACTUAL LOCATIONS OR ELEVATIONS. THE CONTRACTOR WILL VERIFY LOCATION OF UTILITIES BEFORE BEGINNING CONSTRUCTION WHICH MAY BE AFFECTED BY A UTILITY CONFLICT. THE CONTRACTOR WILL GIVE 48 HOURS NOTICE TO THE OWNERS OF KNOWN UTILITIES BEFORE STARTING ANY OPERATIONS AFFECTING THOSE PROPERTIES OR BEGINNING EXCAVATION IN THE VICINITY OF THOSE PROPERTIES. THE CONTRACTORS ATTENTION IS DIRECTED TO SECTION 1507 IN THE STANDARD SPECIFICATIONS. UTILITY COMPANIES MAY RELOCATE THEIR FACILITIES CONCURRENTLY WITH THE CONSTRUCTION OPERATIONS UNDER THIS CONTRACT. THE CONTRACTOR WILL SCHEDULE CONSTRUCTION IN COOPERATION WITH UTILITY RELOCATION.
26. THE CONTRACTOR SHALL BE RESPONSIBLE FOR ANY DAMAGE TO EXISTING FACILITIES OUTSIDE THE CONSTRUCTION LIMITS RESULTING FROM NEGLIGENCE.
27. REMOVE ALL SOILS AND SEDIMENT TRACKED OR OTHERWISE DEPOSITED ONTO PUBLIC AND PRIVATE PAVEMENT AREAS. REMOVAL SHALL OCCUR ON A DAILY BASIS WHEN TRACKING OCCURS. SWEEPING MAY BE ORDERED AT ANY TIME IF CONDITIONS WARRANT.
28. THE CONTRACTOR WILL COOPERATE WITH RAMSEY COUNTY AS IT RELATES TO PERPETUATING SURVEY MONUMENTATION. ADVANCED NOTICE OF DISTURBANCE OF MONUMENTS SHOULD BE MADE TO THE RAMSEY COUNTY SURVEYORS OFFICE AT 651-266-7171.

THE FOLLOWING STANDARD PLATES, APPROVED BY THE FEDERAL HIGHWAY ADMINISTRATION, SHALL APPLY ON THIS PROJECT

MNDOT STANDARD PLATES

PLATE NO.	DESCRIPTION
4108F	ADJUSTING RINGS FOR CATCH BASINS AND MANHOLES
7038A	DETECTABLE WARNING SURFACE TRUNCATED DOMES
7100H	CONCRETE CURB AND GUTTER (DESIGN B AND DESIGN V)
7111J	INSTALLATION OF CATCH BASIN CASTINGS (CONCRETE CURB AND GUTTER)
7113A	CONCRETE APPROACH NOSE DETAIL
8000J	CHANNELIZERS
8110E	TRAFFIC SIGNAL BRACKETING (POLE MOUNTED)
8120Q	POLE FOUNDATION (PA85)
8121H	TRANSFORMER BASE AND POLE BASE PLATE (PA85, PA90 AND PA100) (2 SHEETS)
8123G	POLE AND MAST ARM - LUMINAIRES AND TRAFFIC LIGHTS ASSEMBLY (FOR ALL POLE TYPES) (2 SHEETS)
8126L	POLE FOUNDATION (PA90 AND PA100)
8129A	SHIM AND WASHER (TRAFFIC CONTROL SIGNALS AND ROADWAY LIGHTING)
8132B	PREFORMED RIGID PVC CONDUIT LOOP DETECTOR - LAYOUT DETAILS, LAYOUT NOTES, TYPICAL INSTALLATION (3 SHEETS)

CITY OF MAPLEWOOD STANDARD PLATES

PLATE NO.	DESCRIPTION
114	COUNTY ROAD REPLACEMENT
236	COMMERCIAL DRIVEWAY
300	FRAME PLACEMENT DETAILS
301	MANHOLE FRAME AND LID DETAILS
302	STANDARD CATCH BASIN
350D	INLET PROTECTION BELOW GRADE
500	HYDRANT INSTALLATION
540	EMBEDMENT DETAILS FOR DUCTILE IRON PIPE
D-11	RESTRAINED PIPE REQUIREMENT

COMPACTION CRITERIA TABLE

ITEM	DESCRIPTION	COMPACTION TESTING METHOD
2106	EMBANKMENT > 3 FT BELOW GRADING GRADE - NON GRANULAR - NOT MEETING 3149	QUALITY COMPACTION
2106	EMBANKMENT < 3 FT BELOW GRADING GRADE - NON GRANULAR - NOT MEETING 3149	QUALITY COMPACTION
2106	EMBANKMENT > 3 FT BELOW GRADING GRADE - GRANULAR - MEETING 3149	QUALITY COMPACTION
2106	EMBANKMENT < 3 FT BELOW GRADING GRADE - GRANULAR - MEETING 3149	QUALITY COMPACTION
2106	TRENCH BACKFILL AND WITHIN 3 FT OF UTILITY STRUCTURE > 3 FT BELOW GRADING GRADE	QUALITY COMPACTION
2106	TRENCH BACKFILL AND WITHIN 3 FT OF UTILITY STRUCTURE < 3 FT BELOW GRADING GRADE	QUALITY COMPACTION
2106	EMBANKMENT OUTSIDE OF "ROAD CORE" - EXCLUDING TRENCH/STRUCTURE BACKFILL	QUALITY COMPACTION
2211	AGGREGATE BASE COURSE	PENETRATION INDEX
ALL	TEMPORARY WORK	QUALITY COMPACTION

EXISTING GERVAIS AVENUE
GERVAIS EB 21+09.55 TO 22+59.19

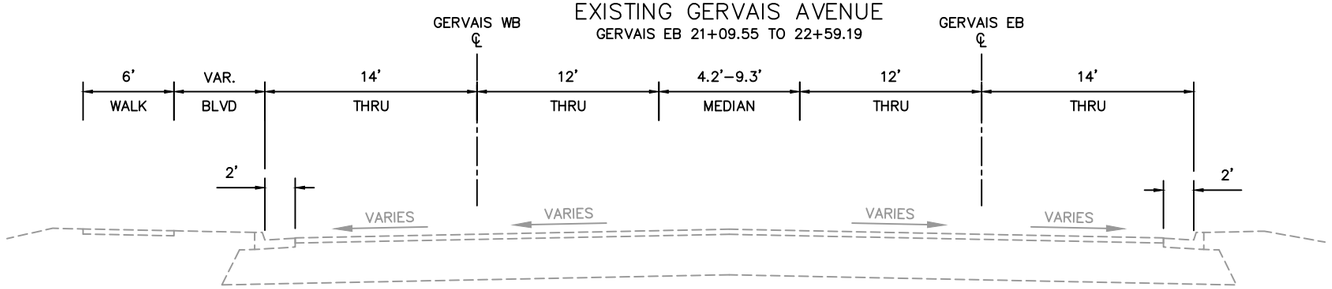

SPECIFIC NOTES:

1. PROPOSED GERVAIS WB ALIGNMENT IS VARIABLE TO FACE OF OUTSIDE CURBLINE IN THIS STATION RANGE. SEE PROPOSED TYPICALS, ALIGNMENT PLAN AND CONSTRUCTION PLAN FOR CLARITY. GERVAIS WB ALIGNMENT IS SHOWN IN EXISTING POSITION FOR THIS EXISTING TYPICAL SECTION.
2. PROPOSED MEDIAN HAS A MINIMUM WIDTH OF 4'. WIDTHS PROVIDED ARE AT START AND END OF STATION RANGE. SEE ALIGNMENT AND CONSTRUCTION PLAN.
3. A PROPOSED TYPICAL SECTION IS NOT PROVIDED FOR WHITE BEAR AVENUE AS WORK IS LIMITED TO INTERSECTION CONSTRUCTION, CURB AND GUTTER AND WALK REPLACEMENT. SEE CONSTRUCTION PLANS.

GENERAL NOTES:

1. TYPICAL SECTIONS ARE NOT TO SCALE.
2. ALL CROSS SLOPES ARE EXPRESSED IN FT/FT.
3. UNLESS OTHERWISE SPECIFIED, THE GRADING CROSS SLOPES WILL BE THE SAME AS PROPOSED DRIVING SURFACE.
4. ALL DIMENSIONS AT CURB AND GUTTER ARE MEASURED TO FACE OF CURB UNLESS OTHERWISE NOTED.
5. AGGREGATE BASE TO EXTEND 1' MINIMUM BEHIND BACK OF CURB.
6. SEE CONSTRUCTION PLANS FOR LOCATION AND EXTENT OF PROPOSED SAWCUTS, CURB AND GUTTER REPLACEMENT AND DRIVEWAYS.

EXISTING GERVAIS AVENUE
GERVAIS EB 22+59.19 TO 24+20.79

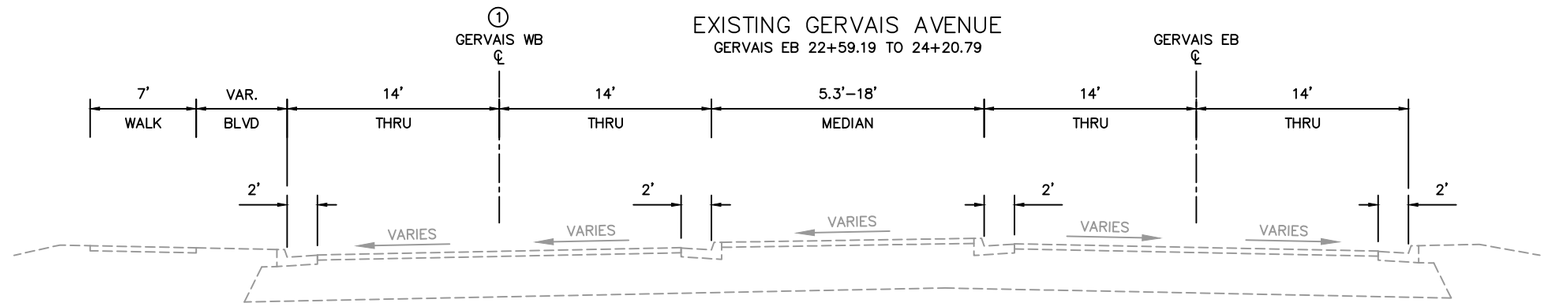

EXISTING GERVAIS AVENUE
GERVAIS EB 24+20.79 TO 25+38.89

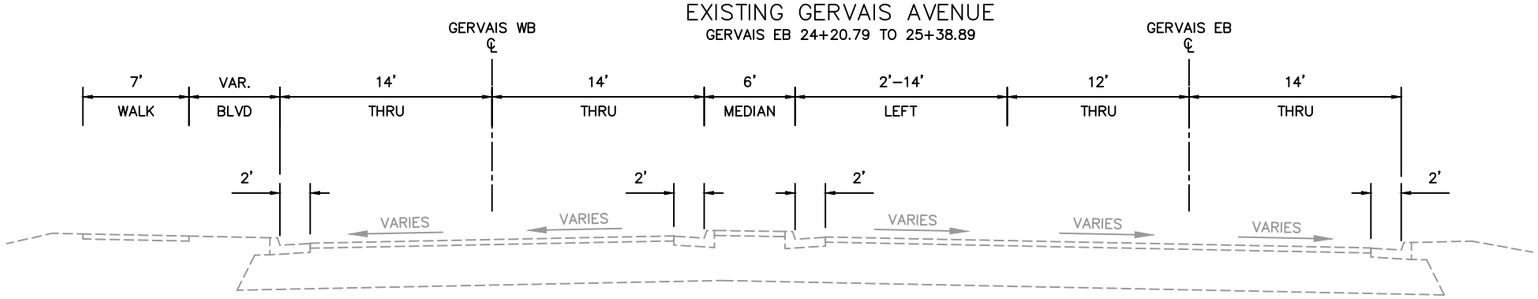

EXISTING WHITE BEAR AVENUE
WHITE BEAR 73+88.55 TO 75+69.68 3

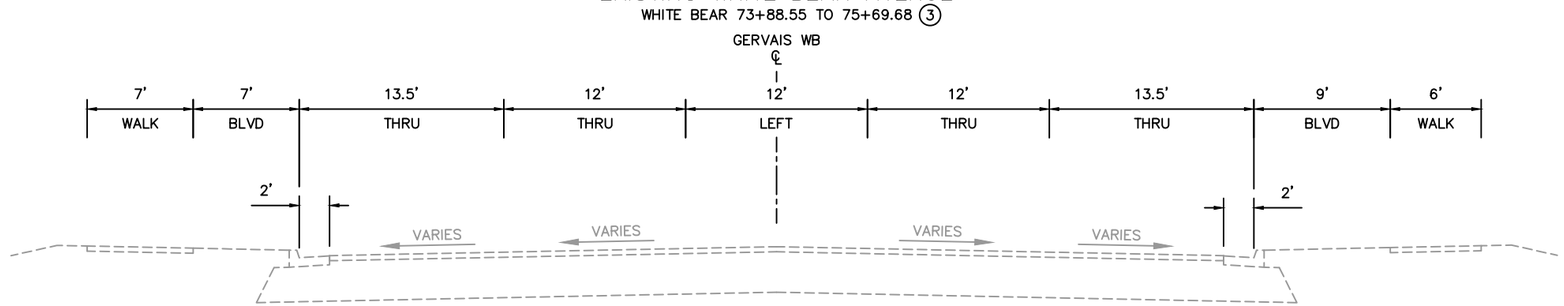

NO	DATE	DWN	CKD	REVISIONS

ALLIANT

I HEREBY CERTIFY THAT THIS SHEET WAS PREPARED BY ME OR UNDER MY DIRECT SUPERVISION AND THAT I AM A DULY LICENSED PROFESSIONAL ENGINEER UNDER THE LAWS OF THE STATE OF MINNESOTA.

PRINT NAME: SEAN M. JOHNSTON
SIGNATURE:
DATE XX/XX/2020 LICENSE # 52701

TYPICAL SECTIONS
EXISTING TYPICAL SECTIONS

RAMSEY COUNTY
WHITE BEAR AVENUE (CSAH 65) & GERVAIS AVENUE IMPROVEMENTS

1:27:35 PM
4/23/2020
c:\pw_working\projectwise\alliant\d0135718\cd200052-typ.dwg

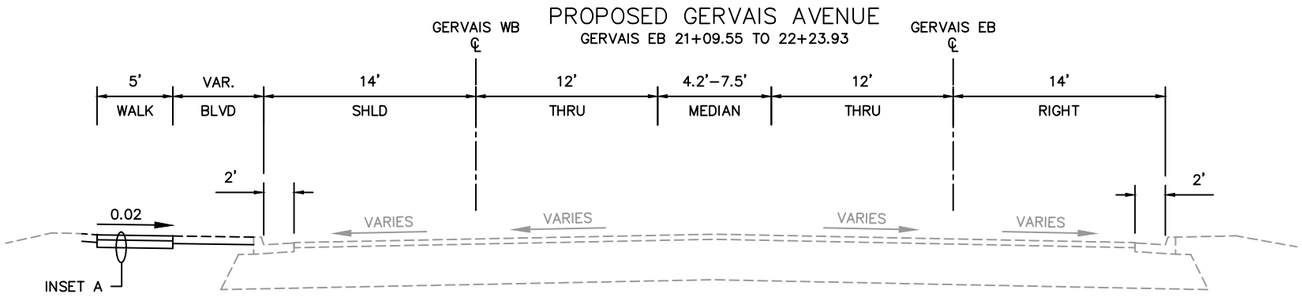

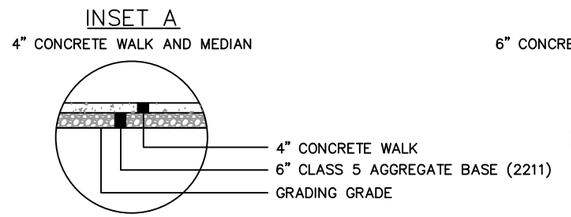

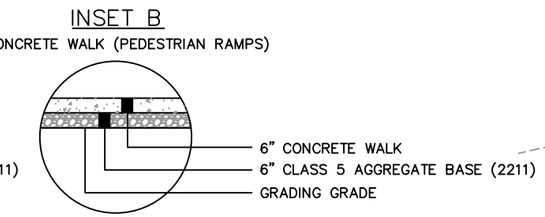

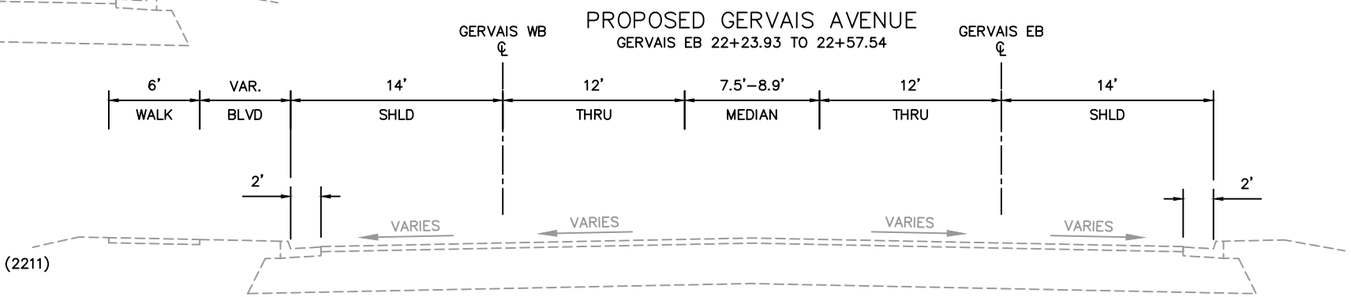

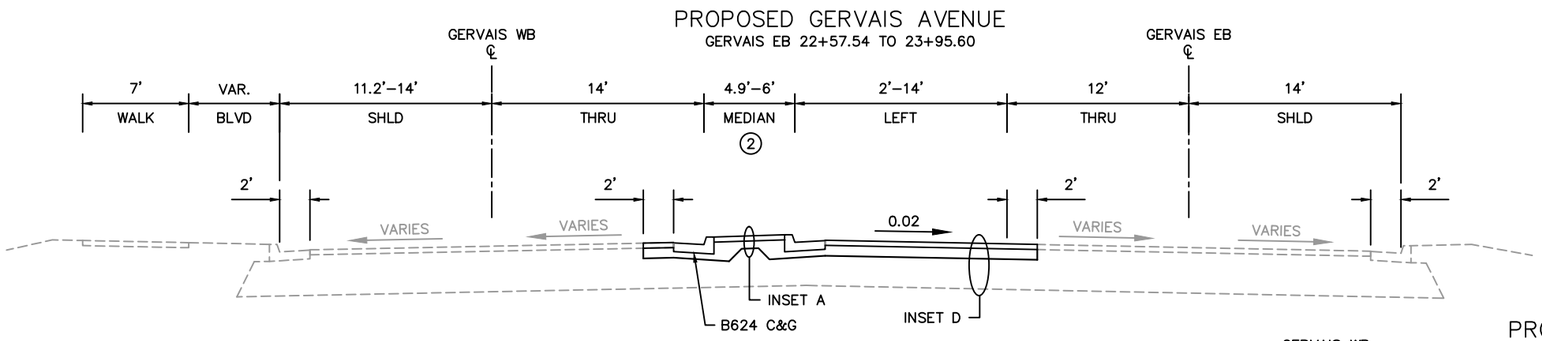

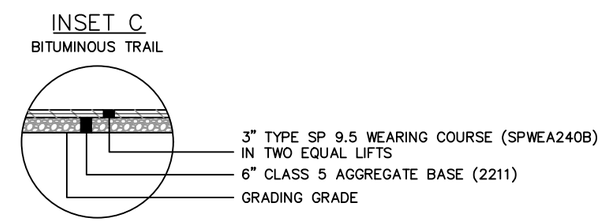

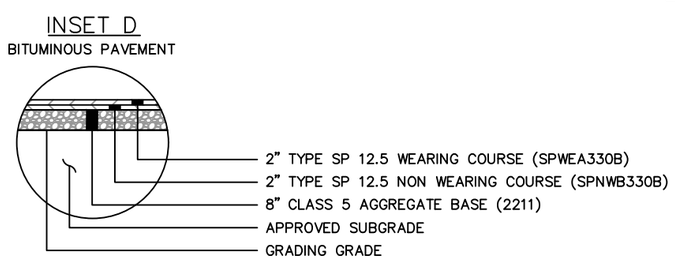

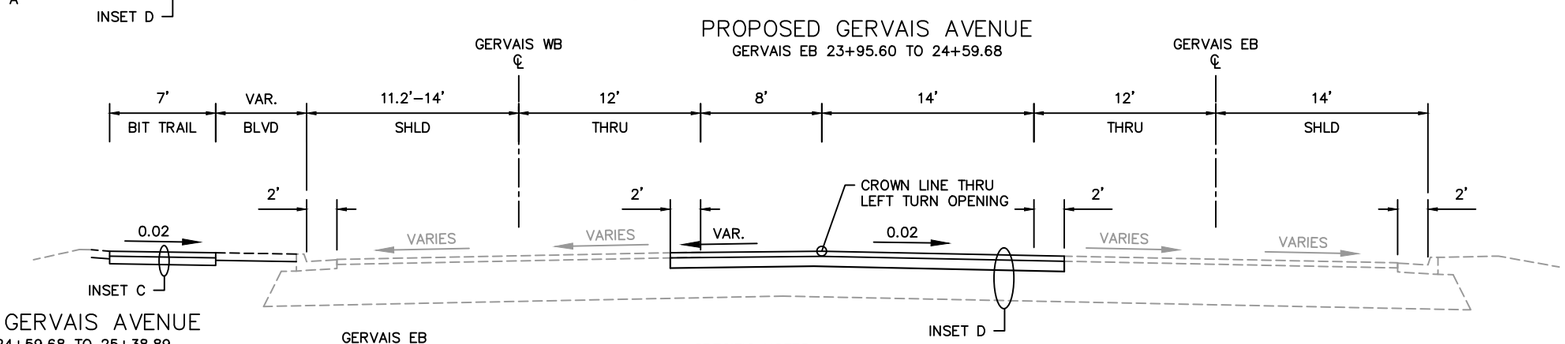

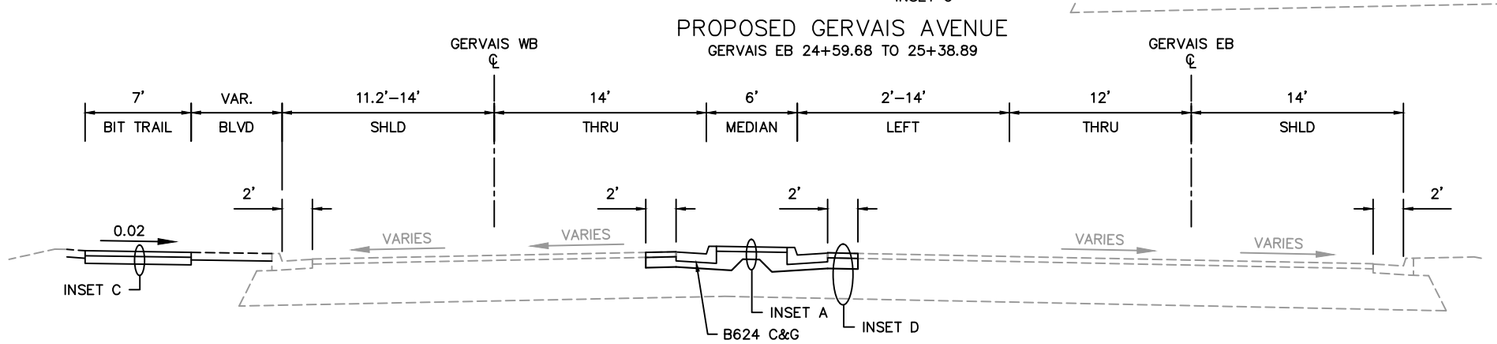

SPECIFIC NOTES:

1. PROPOSED GERVAIS WB ALIGNMENT IS VARIABLE TO FACE OF OUTSIDE CURBLINE IN THIS STATION RANGE. SEE PROPOSED TYPICALS, ALIGNMENT PLAN AND CONSTRUCTION PLAN FOR CLARITY. GERVAIS WB ALIGNMENT IS SHOWN IN EXISTING POSITION FOR THIS EXISTING TYPICAL SECTION.
2. PROPOSED MEDIAN HAS A MINIMUM WIDTH OF 4'. WIDTHS PROVIDED ARE AT START AND END OF STATION RANGE. SEE ALIGNMENT AND CONSTRUCTION PLAN.
3. A PROPOSED TYPICAL SECTION IS NOT PROVIDED FOR WHITE BEAR AVENUE AS WORK IS LIMITED TO INTERSECTION CONSTRUCTION, CURB AND GUTTER AND WALK REPLACEMENT. SEE CONSTRUCTION PLANS.

GENERAL NOTES:

1. TYPICAL SECTIONS ARE NOT TO SCALE.
2. ALL CROSS SLOPES ARE EXPRESSED IN FT/FT.
3. UNLESS OTHERWISE SPECIFIED, THE GRADING CROSS SLOPES WILL BE THE SAME AS PROPOSED DRIVING SURFACE.
4. ALL DIMENSIONS AT CURB AND GUTTER ARE MEASURED TO FACE OF CURB UNLESS OTHERWISE NOTED.
5. AGGREGATE BASE TO EXTEND 1' MINIMUM BEHIND BACK OF CURB.
6. SEE CONSTRUCTION PLANS FOR LOCATION AND EXTENT OF PROPOSED SAWCUTS, CURB AND GUTTER REPLACEMENT AND DRIVEWAYS.

NO	DATE	DWN	CKD	REVISIONS

ALLIANT

I HEREBY CERTIFY THAT THIS SHEET WAS PREPARED BY ME OR UNDER MY DIRECT SUPERVISION AND THAT I AM A DULY LICENSED PROFESSIONAL ENGINEER UNDER THE LAWS OF THE STATE OF MINNESOTA.

PRINT NAME: SEAN M. JOHNSTON
SIGNATURE:
DATE XX/XX/2020 LICENSE # 52701

TYPICAL SECTIONS
PROPOSED TYPICAL SECTIONS

RAMSEY COUNTY
WHITE BEAR AVENUE (CSAH 65) & GERVAIS AVENUE IMPROVEMENTS

SHEET NO. 6 OF 51 SHEETS

1:27:35 PM
4/23/2020
c:\pw_working\projectwise\alliant\d0135718\cd200052-typ.dwg

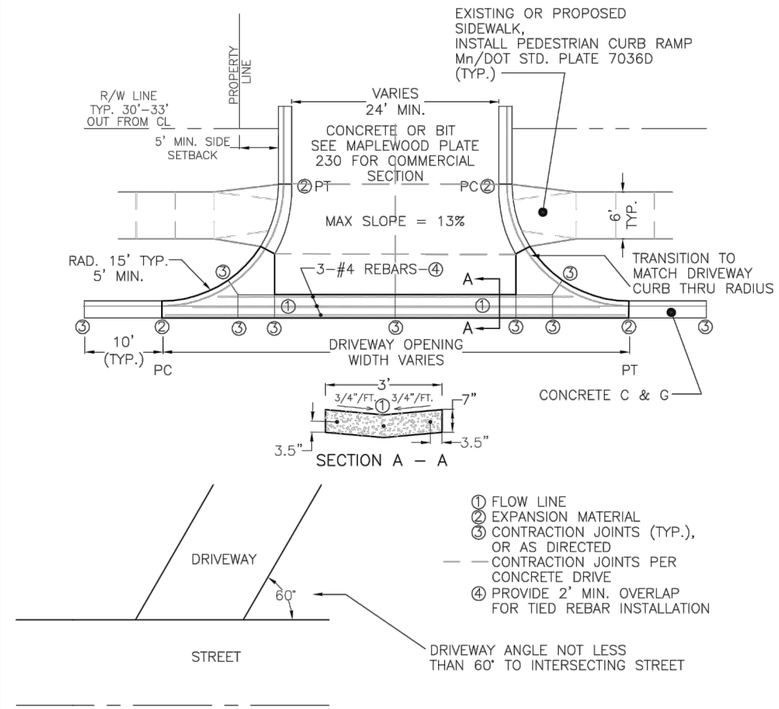

DESIGN: CMC	DATE: 3-02	CITY OF MAPLEWOOD-ENGINEERING DEPT.	PLATE NO.
DRAWN: RKL	FILENAME:P:WORKS\CAD\PLATES\P236	COMMERCIAL DRIVEWAY	236
REVISIONS			

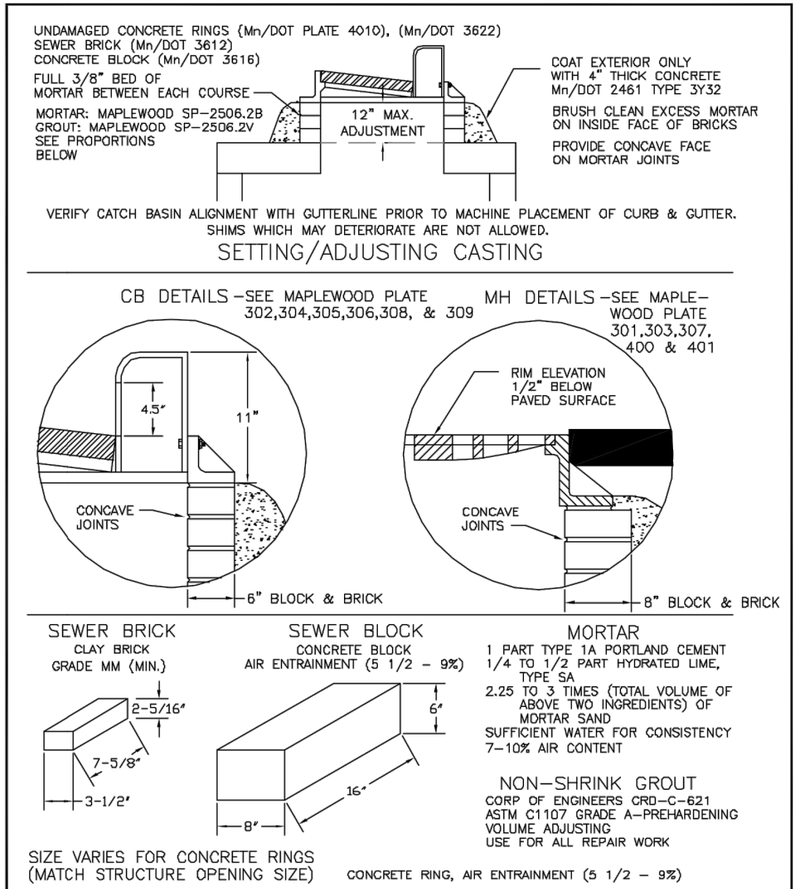

DESIGN: CMC	DATE: 3-95	CITY OF MAPLEWOOD-ENGINEERING DEPT.	PLATE NO.
DRAWN: RKL	FILENAME:P:\WORKS\CAD\PLATES\P300	FRAME PLACEMENT DETAILS	300
REVISIONS	3-97 3-02		

NO	DATE	DWN	CKD	REVISIONS

ALLIANT

I HEREBY CERTIFY THAT THIS SHEET WAS PREPARED BY ME OR UNDER MY DIRECT SUPERVISION AND THAT I AM A DULY LICENSED PROFESSIONAL ENGINEER UNDER THE LAWS OF THE STATE OF MINNESOTA.

PRINT NAME: SEAN M. JOHNSTON
SIGNATURE:
DATE XX/XX/2020 LICENSE # 52701

STANDARD PLATES AND PLANS
CITY OF MAPLEWOOD

RAMSEY COUNTY
WHITE BEAR AVENUE (CSAH 65) & GERVAIS AVENUE IMPROVEMENTS

1:27:39 PM
4/23/2020
c:\pw_working\projectwise\alliant\d0135718\cd200052-stp.dwg

RADIAL GRATE

CONCEALED PICKHOLE

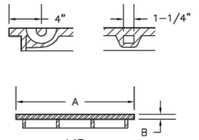

LID

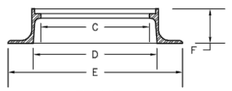

FRAME

STORM SEWER LID

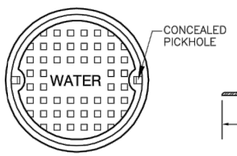

WATER LID

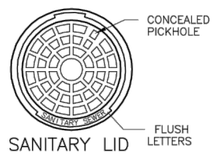

SANITARY LID

1. FRAME MUST BE RAISED TO 1/2" BELOW FINISHED SURFACE PRIOR TO PAVING. MAINTAIN TOLERANCE WITH 1/2" PLYWOOD ROUND DURING ROLLING OPERATIONS.
2. LABEL "SANITARY", "WATER", OR "STORM" AS REQUIRED. ALL LIDS SHALL HAVE CONCEALED PICKHOLES.
3. STORM LIDS SHALL BE TYPE C RADIAL GRATES AT LOW POINTS OR AS DIRECTED BY THE ENGINEER.
4. SEE MAPLEWOOD STANDARD PLATE #307 FOR SURFACE DRAIN CASTING

	NEENAH		MCI		EAST JORDAN	
SAN. SEWER	FRAME WT: 238#	LID WT: 140#	FRAME WT: 230#	LID WT: 135#	FRAME WT: 345#	LID WT: 150#
	R-1678-A	R-1422-0015	314	314SN	1675Z	1450A1
		"SAN. SEWER"		"SAN. SEWER"		"SAN SEWER"
	A = 23 3/4"	B = 1"	A = 23 3/4"	B= 1"	A = 23 3/4"	B = 1"
	C = 21 3/4"	D = N/A	C = 21 3/4"	D = 26"	C = 21 13/16"	D = 25 1/16"
	E = 35"	F = 7"	E = 36"	F = 8"	E = 35"	F = 7"
WATER	FRAME WT: 154#	LID WT: 166#	FRAME WT: 208#	LID WT: 172#	FRAME WT: 180#	LID WT: 150#
	R-1642	R-1642	309	309W	1045Z	1040A
		"WATER"		"WATER"		"WATER"
	A = 26"	B = 1 1/2"	A = 26 1/4"	B = 1 1/2"	A = 26"	B = 1 1/2"
	C = 24"	D = N/A	C = 24 1/8"	D = 26 1/2"	C = 24"	D = 28 7/16"
	E = 35 7/8"	F = 7"	E = 36"	F = 7"	E = 36"	F = 7"
STORM SEWER	FRAME WT: 238#	LID WT: 140#	FRAME WT: 230#	LID WT: 135#	FRAME WT: 180#	LID WT: 125#
	R-1678-A	R-1422-0016	314	314ST	1775Z	1450A1
		"STORM SEWER"		"STORM SEWER"		"STORM SEWER"
	A = 23 3/4"	B = 1"	A = 23 3/4"	B = 1"	A = 23 3/4"	B = 1"
	C = 21 3/4"	D = N/A	C = 21 3/4"	D = 26"	C = 21 3/16"	D = 25 1/16"
	E = 35"	F = 7"	E = 36"	F = 8"	E = 35"	F = 7"
RADIAL-SURFACE	FRAME WT: 238#	LID WT: 103#	FRAME WT: 230#	LID WT: 110#	FRAME WT: 180#	LID WT: 124#
	R-1678-A	R-2422-0009	314	314R	1775Z	TYPE 1450M
		TYPE C GRATE		TYPE C GRATE		(RADIAL FLAT GRATE)
	A = 23 3/4"	B = 1"	A = 23 3/4"	B = 1"	A = 23 3/4"	B = 1"
	C = 21 3/4"	D = N/A	C = 21 3/4"	D = 26"	C = 21 3/16"	D = 25 1/16"
	E = 35"	F = 7"	E = 36"	F = 8"	E = 35"	F = 7"

DESIGN: CMC	DATE: 3-95	CITY OF MAPLEWOOD-ENGINEERING DEPT.	PLATE NO.
DRAWN: RKL	FILENAME:P:\WORKS\CAD\PLATES\P301	MANHOLE FRAME AND LID DETAILS	301
REVISIONS 3/05 3/07			

P:\WORKS\CAD\PLATES\dwg\P301.DWG 4/13/2007 2:58:12 PM CDT

HS 20 ROADWAY LOADING CATCH BASIN TOP SLAB
PRECAST REINFORCED CONCRETE WITH RECTANGULAR OPENING

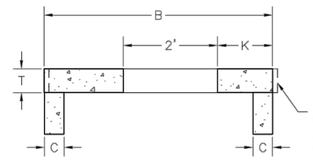

SECTION A-A

TOP SLAB MAX. 0.1' OFFSET TO ALIGN HOLE WITH CURB

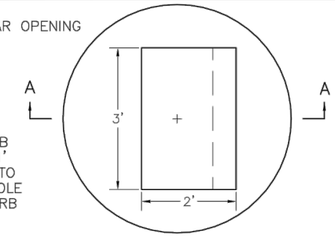

PLAN OF TOP SLAB

STRUCTURE REQUIREMENTS						
STORM PIPE LEAD DIA.	D	B	C	E	T	K
12"-18"	48"	58"	5"	6"	6"	*
21"-27"	60"	72"	6"	8"	8"	*
30"-36"	72"	86"	7"	8"	8"	*

* K VARIES WITH SUPPLIER AND SIZE STRUCTURE C LOCATION AS SHOWN IN THE STRUCTURE SCHEDULE IS BASED ON A 'K' DIMENSION OF 14"

SEE MAPLEWOOD PLATES 112, 300, 304, 305, & 309 FOR FRAME PLACEMENT DETAILS

TOP SLAB TO REST ON BED OF MASTIC, ON FULL THICKNESS OF STRUCTURE WALLS- NOT TO REST ON PIPE TONGUE OR GROOVE

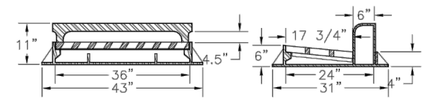

CATCH BASIN	NEENAH	MCI	EAST JORDAN
FRAME	R-3067	R-3067	7030
GRATE	R-3067-V	R-3067-V	M4
FRAME & GRATE LOCATED IN DRIVEWAYS AS DIRECTED USE NEENAH R-3290-A			

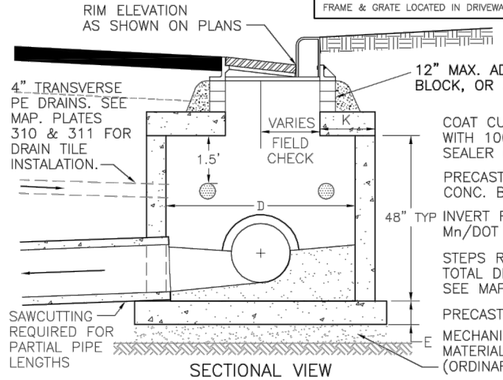

SECTIONAL VIEW

12" MAX. ADJUSTMENT- SEWER BRICK, BLOCK, OR UNDAMAGED CONCRETE RINGS

COAT CUT ENDS OF RCP & REBAR WITH 100% SOLIDS, TWO PART EPOXY SEALER (SIKA GUARD 6Z OR EQUAL)

PRECAST REINFORCED CONC. BARREL STRUCTURE

INVERT FILLET CAST IN PLACE Mn/DOT TYPE 2461 3B42 CONCRETE

STEPS REQUIRED @ STD. 16" O.C. WHEN TOTAL DEPTH EXCEEDS FIVE FEET SEE MAPLEWOOD PLATE 303

PRECAST REINFORCED CONCRETE BASE

MECHANICALLY COMPACT 4" GRANULAR MATERIAL FOR LEVELING (Mn/DOT 3149.2I (ORDINARY COMPACTION)

DESIGN: CMC	DATE: 3-95	CITY OF MAPLEWOOD-ENGINEERING DEPT.	PLATE NO.
DRAWN: RKL	FILENAME:P:\WORKS\CAD\PLATES\P300	STANDARD CATCH BASIN	302
REVISIONS 3-97 3-02 3-04 3-06 3-07			

P:\WORKS\CAD\PLATES\dwg\P302.DWG 4/11/2007 4:31:22 PM CDT

DANDY BAG® II
Installation and Maintenance Guidelines

Installation: Remove the grate from catch basin. If using optional oil absorbents; place absorbent pillow in unit. Stand the grate on end. Move the top lifting straps out of the way and place the grate into the Dandy Bag® II so that the grate is below the top straps and above the lower straps. Holding the lifting devices, insert the grate into the inlet.

Maintenance: Remove all accumulated sediment and debris from vicinity of unit after each storm event. After each storm event and at regular intervals, look into the Dandy Bag® II. If the containment area is more than 1/3 full of sediment, the unit must be emptied. To empty unit, lift the unit out of the inlet using the lifting straps and remove the grate. If using optional oil absorbents; replace absorbent when near saturation.

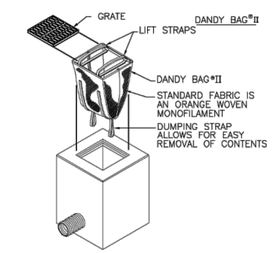

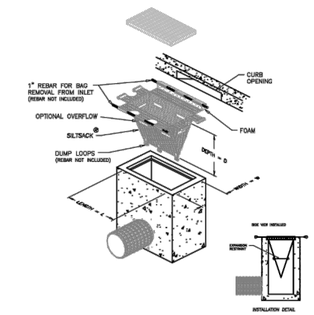

DETAIL OF INLET SEDIMENT CONTROL DEVICE WITH CURB DEFLECTOR
ACF ENVIRONMENTAL
SILTSACK

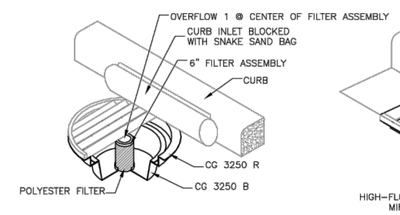

WIMCO
ROAD DRAIN
CURB AND GUTTER MODEL
CG 3250 R

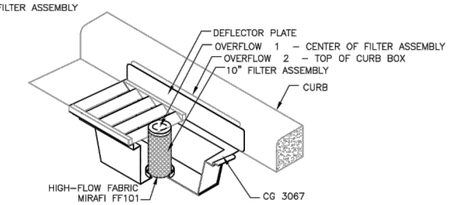

WIMCO
ROAD DRAIN
CURB AND GUTTER MODEL
CG 3067

NOTE: * TO BE USED AT LOW POINTS AND AREAS OF INCREASED RUNOFF
* SIDE INLET PROTECTION TO BE USED AT ALL TIMES.

* OR ENGINEER APPROVED EQUAL

DESIGN:	CITY OF MAPLEWOOD-ENGINEERING DEPT.	PLATE NO.
DRAWN: JPD	INLET PROTECTION BELOW GRADE	350D 4 of 5
REVISIONS		

P:\WORKS\CAD\PLATES\dwg\P350A.dwg 4/13/2007 3:08:16 PM CDT

NO	DATE	DWN	CKD	REVISIONS

ALLIANT

I HEREBY CERTIFY THAT THIS SHEET WAS PREPARED BY ME OR UNDER MY DIRECT SUPERVISION AND THAT I AM A DULY LICENSED PROFESSIONAL ENGINEER UNDER THE LAWS OF THE STATE OF MINNESOTA.

PRINT NAME: SEAN M. JOHNSTON
SIGNATURE:
DATE XX/XX/2020 LICENSE # 52701

STANDARD PLATES AND PLANS
CITY OF MAPLEWOOD

RAMSEY COUNTY
WHITE BEAR AVENUE (CSAH 65) & GERVAIS AVENUE IMPROVEMENTS

SHEET NO. 8 OF 51 SHEETS

1:27:40 PM
4/23/2020
c:\pw_working\projectwise\alliant\d0135718\cd200052-stp.dwg

NOTES:

1. HYDRANT SHALL BE MECHANICAL JOINT WATEROUS PACER WB-67 AND SHALL OPEN RIGHT (CLOCKWISE) FOR SPRWS SYSTEM HYDRANTS AND SHALL OPEN LEFT FOR NORTH ST. PAUL SYSTEM HYDRANTS.
2. STEAMER & HOSE CONNECTION CAPS TO BE SECURED WITH CHAINS.
3. HYDRANTS TO BE PAINTED NATIONAL SAFETY YELLOW (AS SUPPLIED BY WATEROUS). 1 FIELD APPLIED COAT REQUIRED AFTER FINAL TURF ESTABLISHMENT. 2 FIELD APPLIED COATS REQUIRED IF HYDRANT COMES FROM FACTORY WITH OTHER COLOR.
4. HYDRANT ASSEMBLY TO BE EQUIPPED WITH A FLEXIBLE 4' MARKER LABELED HYD.
5. VALVE BOX TO BE 4 PIECE TYLER SERIES #6860, ITEM G OR EQUAL.
6. HYDRANT HOSE & STEAMER CONNECTIONS SHALL BE NATIONAL STANDARD THREADS.

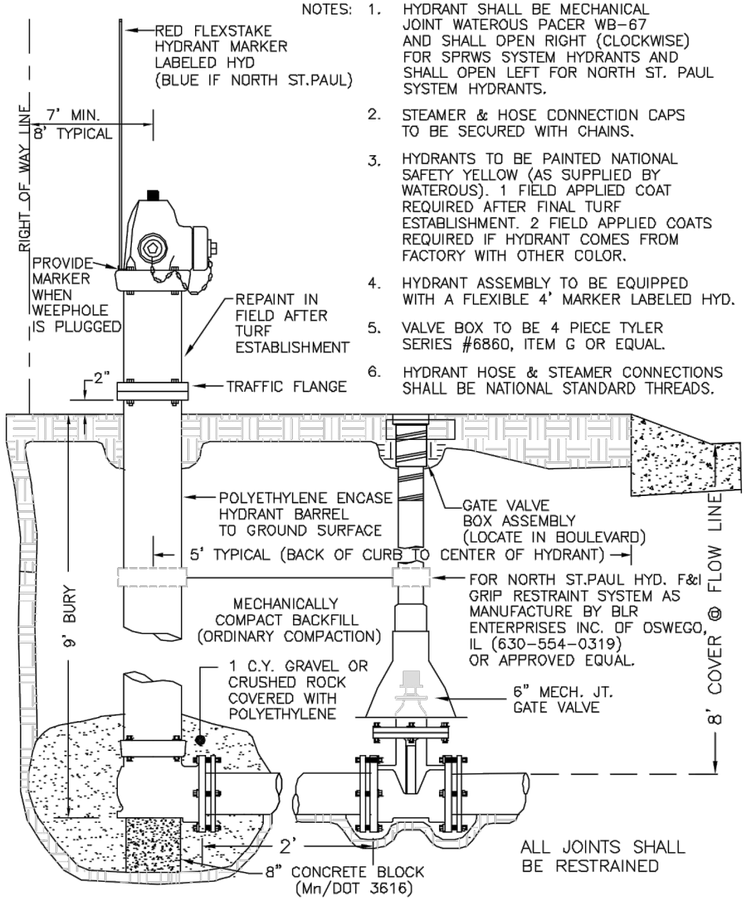

DESIGN: CMC	DATE: 3-95			
DRAWN: RKL	FILENAME:P:\WORKS\CAD\PLATES\P500			
REVISIONS	3-97	3-02		

CITY OF MAPLEWOOD-ENGINEERING DEPT.

HYDRANT INSTALLATION

(REFERENCE SPRWS STANDARD PLATE D-3)

PLATE NO. 500

IN SOILS APPROVED BY THE CITY ENGINEER, A FLAT BOTTOM TRENCH (EXCAVATE BELL * HOLES) MAY BE USED.

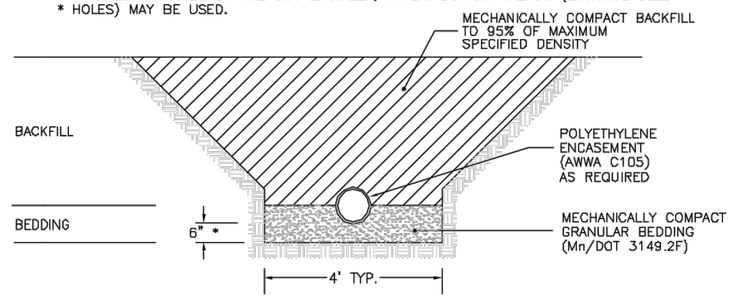

PIPE BEDDING
IN HEAVY CLAY OR ROCKY SOILS

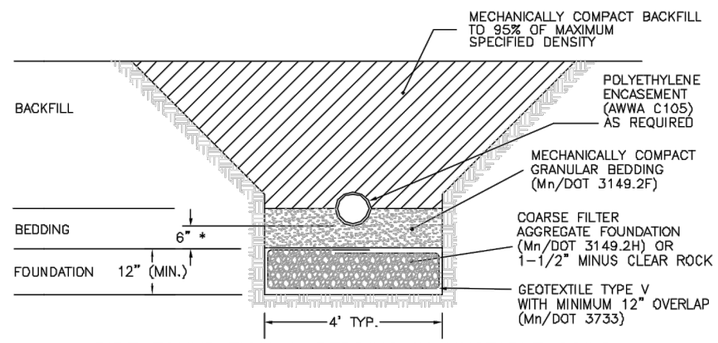

PIPE FOUNDATION & BEDDING IN UNSTABLE SOILS

GRANULAR BEDDING SHALL BE COMPACTED WITH MOTOR DRIVEN EQUIPMENT UNTIL THERE IS NO VISIBLE ADDITIONAL COMPACTION. PARTICULAR CARE SHALL BE TAKEN TO ASSURE NO VOIDS UNDER PIPE HAUNCHES.

ALL BACKFILL AND BEDDING SHALL BE UNIFORMLY COMPACTED TO 95% OF MAXIMUM SPECIFIED DENSITY. TEST SHALL BE TAKEN AT 500' INTERVALS, EVERY 3' LAYER, OR AS DIRECTED BY ENGINEER.

ALL EXCAVATIONS MUST COMPLY WITH THE REQUIREMENTS OF OSHA 29 CFR, PART 1926, SUBPART P, EXCAVATION AND TRENCHES.

DESIGN: CMC	DATE: 3-95			
DRAWN: RKL	FILENAME:P:\WORKS\CAD\PLATES\P540			
REVISIONS	3-97	3-02		

CITY OF MAPLEWOOD-ENGINEERING DEPT.

EMBEDMENT DETAILS
FOR DUCTILE IRON PIPE

PLATE NO. 540

MINIMUM FEET OF RESTRAINED PIPE REQUIRED
ON EACH SIDE OF BEND FOR DUCTILE IRON PIPE

INCREASE MINIMUM LENGTHS BY THE FOLLOWING AMOUNTS IF PIPE IS WRAPPED IN POLYETHYLENE.

50% INCREASE ON ALL DEAD ENDS.
20% INCREASE ON ALL BENDS.

	7.0' COVER				7.5' COVER				8.0' COVER			
PIPE SIZE	22.5°	45°	90°	DEAD END	22.5°	45°	90°	DEAD END	22.5°	45°	90°	DEAD END
4"	2	3	8	18	2	3	8	18	1	3	8	17
6"	2	5	12	26	2	5	11	25	2	4	11	25
8"	3	6	15	34	3	6	15	33	3	6	14	32
12"	4	9	22	50	4	9	21	48	4	8	20	46
16"	6	12	29	65	5	11	27	63	5	11	26	61
20"	7	15	35	80	7	14	34	77	6	13	32	75
24"	8	17	41	95	8	16	40	92	8	16	38	89
30"	10	21	50	117	10	20	48	113	9	19	46	109
36"	12	24	59	138	11	23	57	133	11	22	54	129
42"	13	28	67	159	13	27	65	153	12	26	62	148
48"	15	31	75	179	14	30	72	173	14	29	69	167

THE TABLE WAS DEVELOPED FROM CRITERIA IDENTIFIED IN THE 1992 EDITION OF "THRUST RESTRAINT DESIGN FOR DUCTILE IRON PIPE", AS PUBLISHED BY THE DUCTLIE IRON PIPE RESEARCH ASSOCIATION (DIPRA). THE TABLE ASSUMES COH-GRAN SOIL AND TYPE 4 LAYING CONDITIONS. REFER TO DIPRA FOR MINIMUM LENGTHS IF DIFFERENT SOIL OR LAYING CONDITIONS ARE ENCOUNTERED.

DR. TR.
CH.
APPROVED

WATER UTILITY - CITY OF ST. PAUL, MN.

RESTRAINED PIPE REQUIREMENT

7.0' - 8.0' EARTH COVER

STANDARD PLATE D-11
3 of 3

1:27:41 PM
4/23/2020
c:\pw_working\projectwise\alliant\d0135718\cd200052-stp.dwg

NO	DATE	DWN	CKD	REVISIONS

ALLIANT

I HEREBY CERTIFY THAT THIS SHEET WAS PREPARED BY ME OR UNDER MY DIRECT SUPERVISION AND THAT I AM A DULY LICENSED PROFESSIONAL ENGINEER UNDER THE LAWS OF THE STATE OF MINNESOTA.

PRINT NAME: SEAN M. JOHNSTON
SIGNATURE:
DATE XX/XX/2020 LICENSE # 52701

STANDARD PLATES AND PLANS
CITY OF MAPLEWOOD

RAMSEY COUNTY
WHITE BEAR AVENUE (CSAH 65) & GERVAIS AVENUE IMPROVEMENTS

SHEET NO. 9 OF 51 SHEETS

BLUE TOPS

NORMAL SECTION

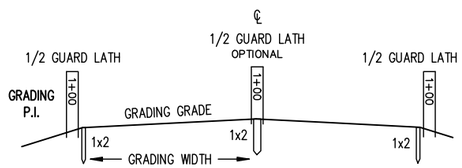

TRANSITION SECTION

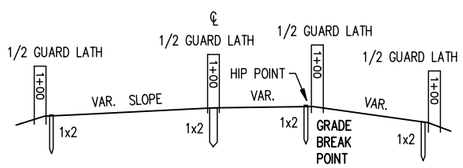

PIPE STAKING

PROFILE VIEW
CENTERLINE PIPE

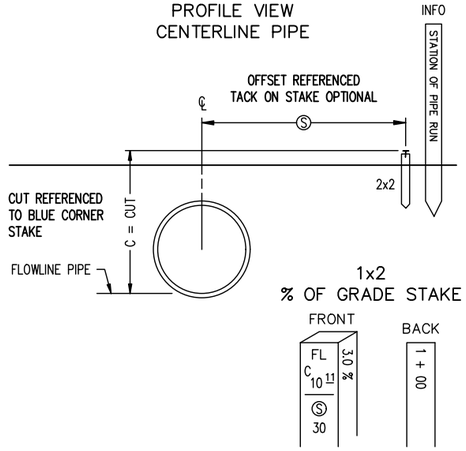

CATCH BASIN OR MANHOLE (CB/MH)

TOP VIEWS

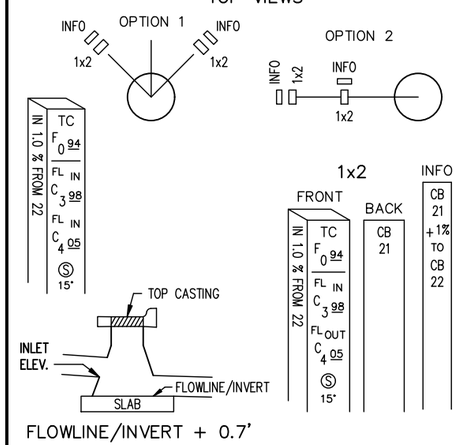

FLOWLINE/INVERT + 0.7'

STANDARD STAKES

TYPES:
REFERENCE (REF)
INFORMATIONAL (INFO)
VISIBILITY (VIS)
GUARD (GUARD)

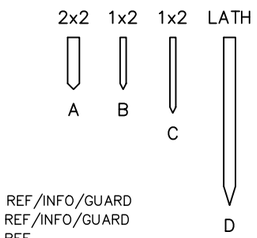

SIZES:
A = 2" X 2" X VAR. REF/INFO/GUARD
B = 1" X 2" X VAR. REF/INFO/GUARD
C = 1" X 2" X VAR. REF
D = LATH INFO/VIS/GUARD
1x2 OR LATH = INFO STAKES

ABBREVIATIONS

BBL = BARREL (PIPE)
B.C. = BACK CURB
C & G = CURB & GUTTER
C = CUT
CAP = CORR. ALUM. PIPE
CB = CATCH BASIN
℄ = CENTERLINE
CL & GR = CLEAR & GRUB
CMP = CORR. METAL PIPE
COR = CORNER
CR = CROWN
CSP = CORR. STEEL PIPE
℄ = DITCH CUT
D.E. = DRAINAGE EASEMENT
DI = DROP INLET
EB = EASTBOUND
E.M. = EDGE BITUMINOUS MAT
E.S. = EDGE CONCRETE SLAB
F = FILL
FF = FRONT FACE
FL = FLOW LINE
FL IN = FLOWLINE INLET
FL OUT = FLOWLINE OUTLET
GR = GRADE
GW = GRADING WIDTH
HH = HANDHOLE
HP = HIP POINT
LT = LEFT
MH = MANHOLE
NB = NORTHBOUND
Ⓢ = OFFSET
PAR = PARCEL
% = PERCENT GRADE
P.E. = PERM. EASEMENT
RAD = RADIUS POINT
RCP = REINF. CONC. PIPE
RP = REFERENCE POINT
RSC = REINF. SECT. CONC.
RT = RIGHT
R/W = RIGHT OF WAY
SB = SOUTHBOUND
SCP = SECT. CONC. PIPE
SH = SHOULDER
TC = TOP CASTING OR TOP CURB
T.E. = TEMP. EASEMENT
3 : 1 = SLOPE (EXAMPLE)
WB = WESTBOUND
WP = WORKING POINTS

SLOPE STAKES

SINGLE ROADWAY – EXAMPLE 'A'

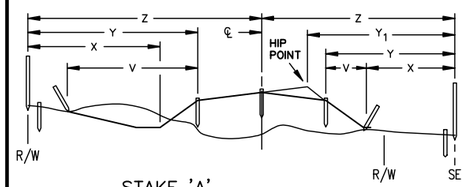

STAKE 'A'
FULL LATH AND HUB-STATION
DIST. TO ℄ WITH CUT/FILL TO ℄ (Z)
DIST. TO SHLD. WITH CUT/FILL TO SHLD. (Y) (Y1)
DIST. TO TOE OF SLOPE, CUT/FILL FROM HUB (X)
OFFSET TO SAFTY SLOPE
OFFSET TO HIP POINT

STAKE 'B'
FULL LATH
DITCH CUT/SHLD. FILL
SLOPE RATED
DISTANCE TO INSLOPE TOE (V1) OR SHOULDER (AS APPLIES) (V)

NOTE:
BLUE TOPS REQUIRED ON ℄ AND BOTH SHOULDERS AT MINIMUM
ALL CULVERTS TO BE STAKED
MINIMUM DATA TO BE PROVIDED
STAKE TO BOTTOM OF TOPSOIL

SLOPE STAKES

SINGLE ROADWAY – EXAMPLE 'B'

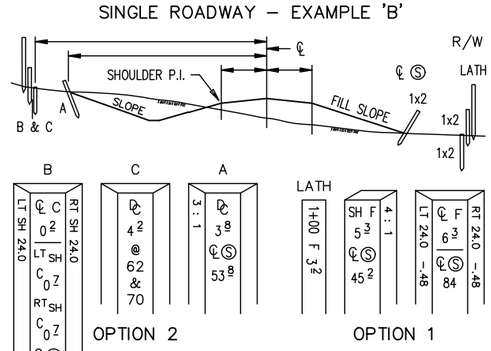

OPTION 2 OPTION 1

NOTES: ALL SLOPE STAKE REFERENCE DISTANCES GIVEN FROM ℄. STAKE TO BOTTOM OF TOP SOIL.

KEY STAKES: BLUE TOP SET AT R/W BOUNDARY LT. & RT. MAY BE EXCEPTIONS TO SETTING STAKE ON R/W.

CONCRETE PAVING STATIONARY FORM

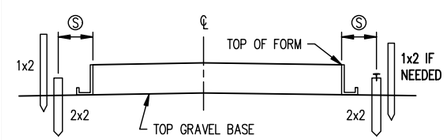

OFFSET TO CONTRACTOR'S OPTION

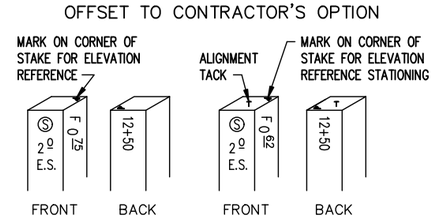

NOTE INFORMATION ON STAKE IF NECESSARY

RECOMMENDED STAKING INTERVALS

FIGURE A

	SLOPE STAKES	SUB GRADE B.T.	CLASS MATERIAL B.T.	CONC PAVT	C & G	CL & GR LIMITS	MUCK EXC.	R/W	TEMP. EASE.
TANGENT	100	100	100	50	50	ALL CORNERS	100	ALL CORNERS	ALL CORNERS
HORIZ. CURVE									
0 – 3°	100	100	100	50	50	ALL CORNERS	100	ALL CORNERS	ALL CORNERS
OVER 3° –	100	50	50	25	25	ALL CORNERS	100	ALL CORNERS	ALL CORNERS
VERT. CURVE									
'M' 100' CHORD 0 – .25	100	100	100	50	50				
'M' OVER .25	100	50	50	25	25				
TRAN.		50	50						

STAKING TOLERANCES (FEET)

	HORIZONTAL	VERTICAL
CONSTRUCTION LIMITS	± 1.5	
CLEARING & GRUBBING	2.0	
SLOPES STAKES	2.0	± 0.2
KEY STAKES	0.2	0.03
DRAINAGE STAKES	0.05	0.05
CURB & GUTTER	0.07	0.03
PAVING	0.05	0.03
ALIGNMENT	0.07	
UTILITY	0.10	0.05
STRUCTURAL	0.02	0.02
GUARD RAIL	0.5	
BUILDINGS	0.04	
O.H. SIGNS	0.05	0.05
MUCK EXCAVATION LIMITS	2.0	
R/W B-POINTS	0.10	
NOISE WALLS	1.0	0.5

THE TOLERANCES ARE RELATIVE TO PROJECT DATUM

UTILITY (UTIL)

STAKE POLES MINIMUM OF 5 FT. FROM ANY R/W CORNER
EXAMPLE: POLE LINE = R/W LINE

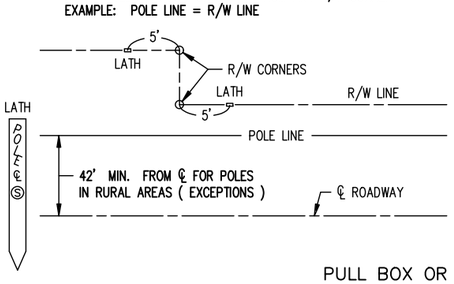

PULL BOX OR HAND HOLE

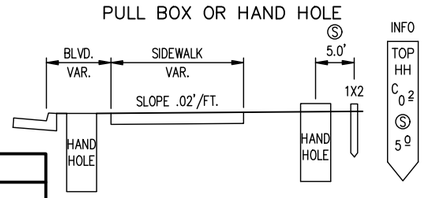

CURB & GUTTER (CURB)

OPTIONAL LATH WHEN NEEDED TO MARK TYPE OF CURB & GUTTER IF THERE IS A CHANGE

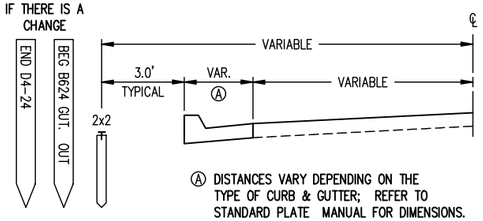

Ⓐ DISTANCES VARY DEPENDING ON THE TYPE OF CURB & GUTTER; REFER TO STANDARD PLATE MANUAL FOR DIMENSIONS.

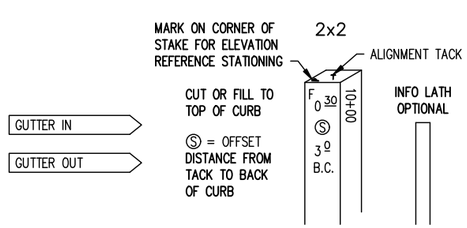

CONCRETE PAVING – SLIP FORM

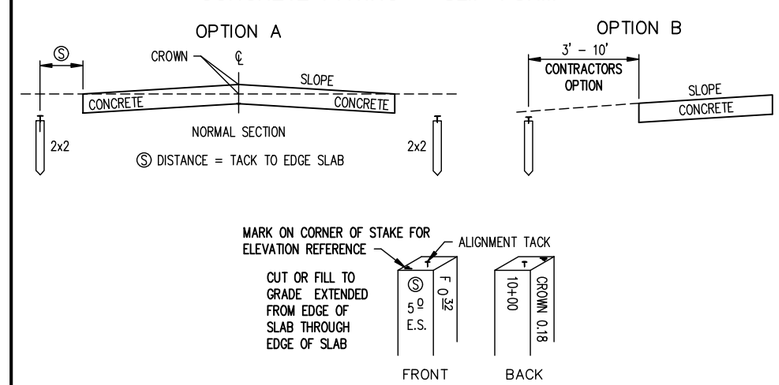

DISCLAIMER

THESE STAKING INFORMATION SHEETS ARE FOR INFORMATION PURPOSES ONLY. STAKING PROCEDURES VARY AND MAY BE SUBJECT TO CHANGE DURING CONSTRUCTION BY CIRCUMSTANCES AND/OR AGREEMENTS BETWEEN SURVEY CREW AND CONTRACTOR.

REVISION:
APPROVED: 8-6-2014
DIRECTOR, OFFICE OF LAND MANAGEMENT

MINNESOTA DEPARTMENT OF TRANSPORTATION

STANDARD PLAN 5-297.115 | 1 OF 2

APPROVED: 8-6-2014
REVISED:
STATE DESIGN ENGINEER

STAKING INFORMATION SHEET

RAMSEY COUNTY
WHITE BEAR AVENUE (CSAH 65) & GERVAIS AVENUE IMPROVEMENTS

SHEET NO. 10 OF 51 SHEETS

1:27:46 PM
4/23/2020
c:\pw_working\projectwise\aliant\d0135718\cd200052-spn.dwg

GUARDRAIL (GUARD)

BUILDING (BUILD) FOUNDATION / FOOTING

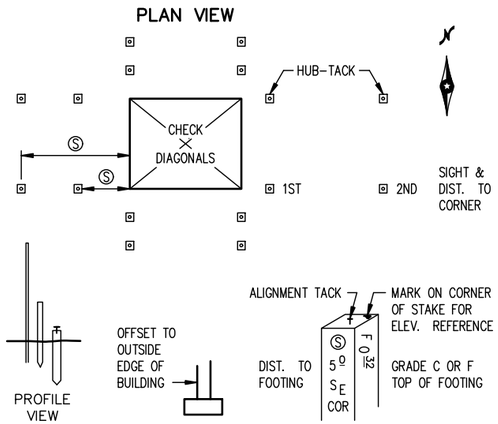

ALIGNMENT POINTS (ALIGN)

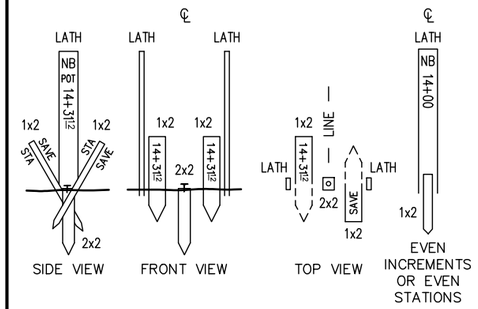

STAKE C = 2" X 2" HUB (LENGTH MAY VARY) SET AS TEMPORARY STAKE. MAY BE REPLACED BY MnDOT MARKER AFTER CONSTRUCTION IS COMPLETED.

SET AT GROUND LEVEL (TEMPORARY CONSTRUCTION STAKE).

TACK SET AT ALIGNMENT POINTS.

STAKE A = GUARD STAKES SET AT ANGLE IN GROUND 6" EACH SIDE OF STAKE D, WITH STATIONING READ WHEN LOOKING UP STATION.

R/W & TEMP. EASEMENT (R/W)

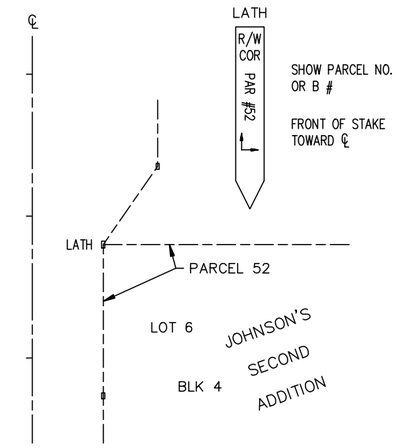

CLEAR & GRUBBING LIMITS (CLEAR) OR MUCK EXCAVATION LIMITS (MUCK)

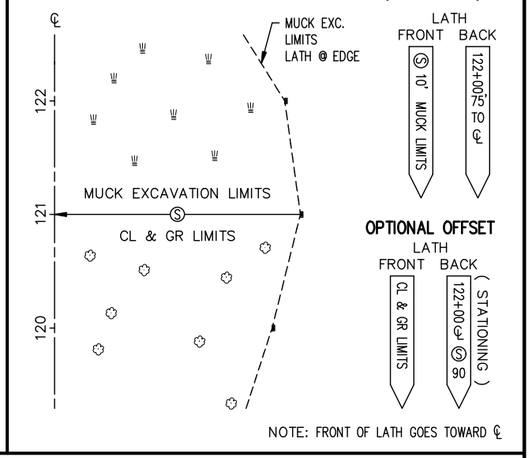

NOTE: FRONT OF LATH GOES TOWARD ℄

OVERHEAD SIGNS (SIGN)

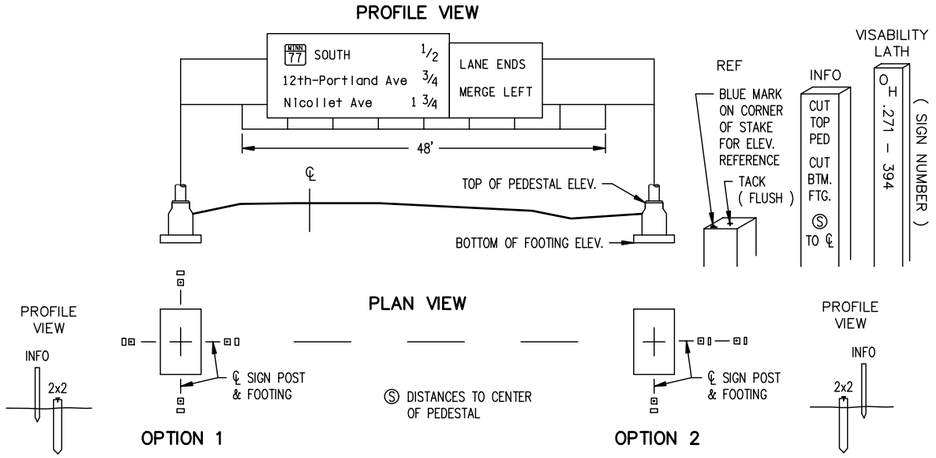

BRIDGESTAKING (BRIDGE)

WORKING POINTS LAYOUT

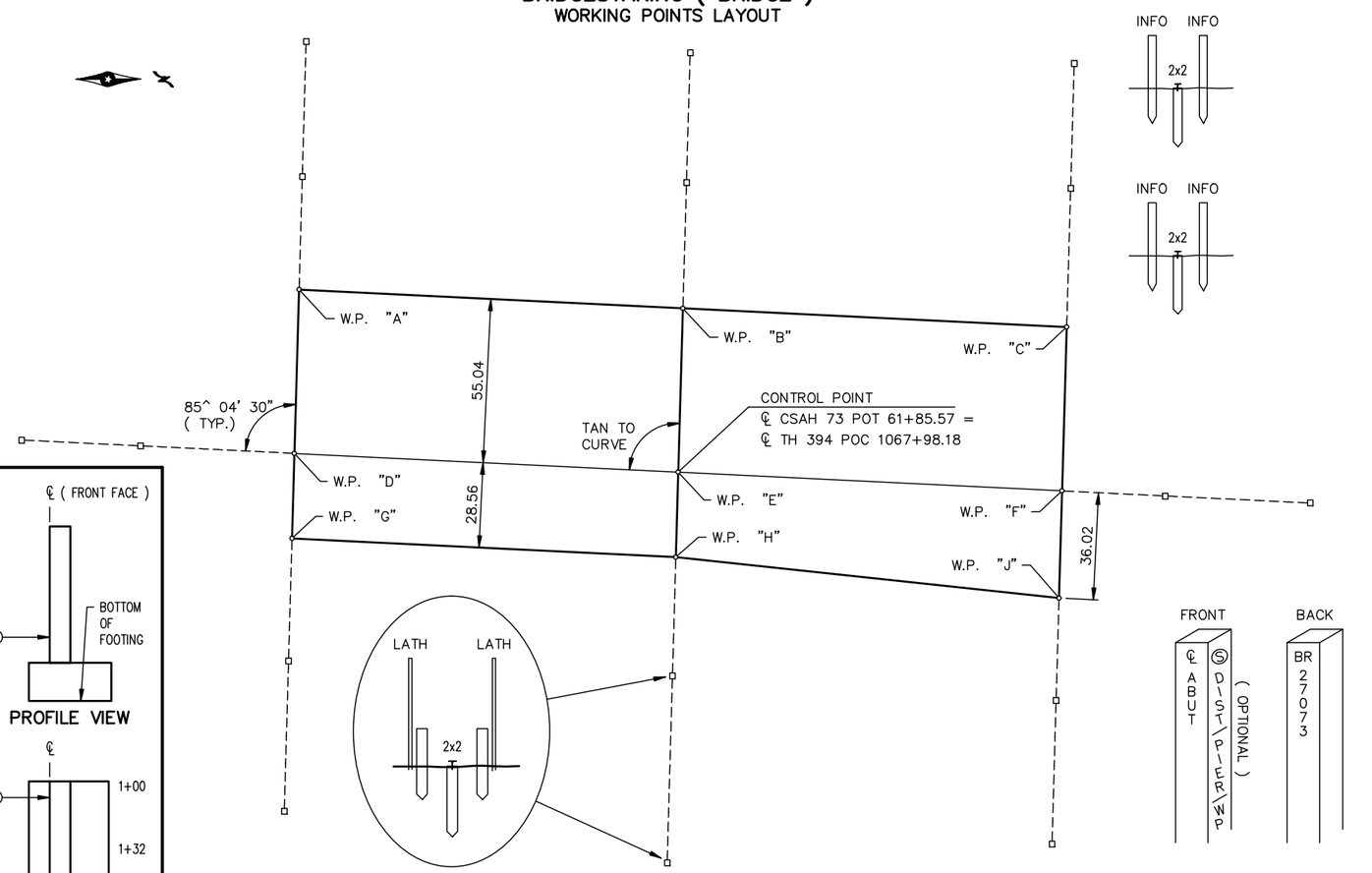

CULVERT

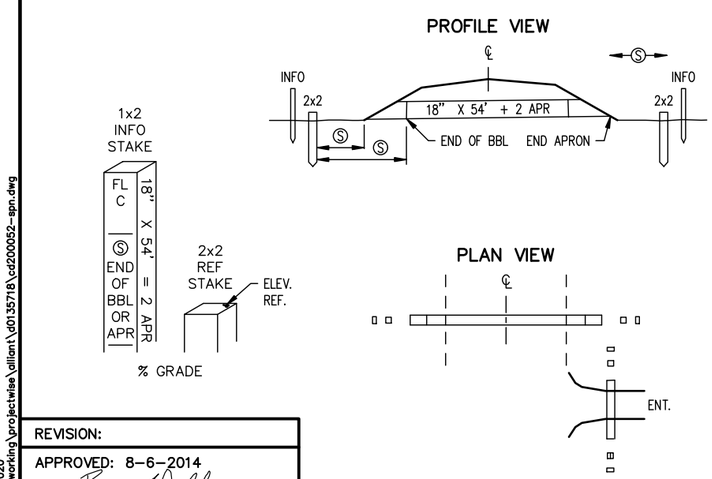

WALL

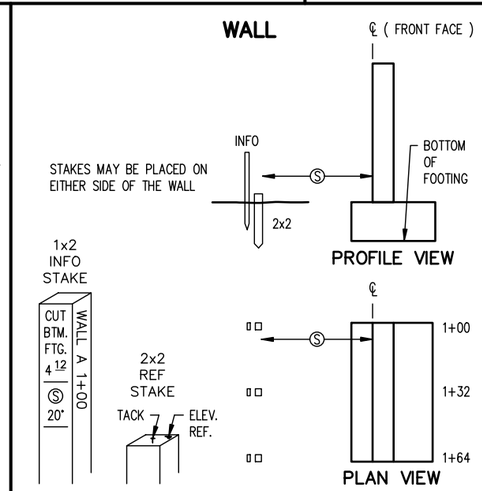

REVISION:

APPROVED: 8-6-2014

DIRECTOR, OFFICE OF LAND MANAGEMENT

1:28:11 PM
4/23/2020
c:\pw_working\projectwise\elliott\d0135718\cd200052-spn.dwg

MINNESOTA DEPARTMENT OF TRANSPORTATION	STANDARD PLAN 5-297.115 — 2 OF 2	STAKING INFORMATION SHEET
	APPROVED: 8-6-2014 REVISED: STATE DESIGN ENGINEER	RAMSEY COUNTY WHITE BEAR AVENUE (CSAH 65) & GERVAIS AVENUE IMPROVEMENTS
		SHEET NO. 11 OF 51 SHEETS

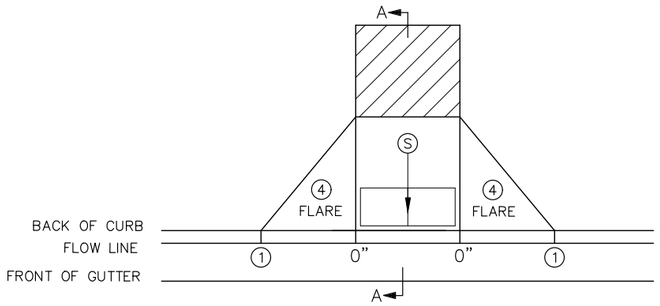

PERPENDICULAR

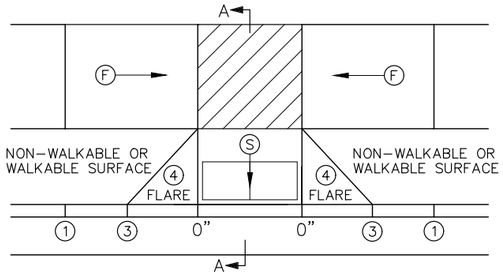

TIERED PERPENDICULAR

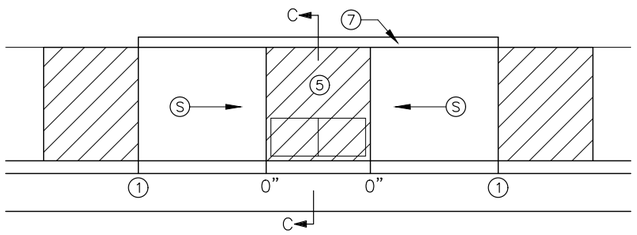

PARALLEL

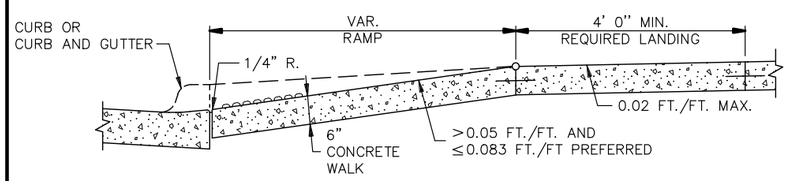

SECTION A–A

PERPENDICULAR/TIERED/DIAGONAL

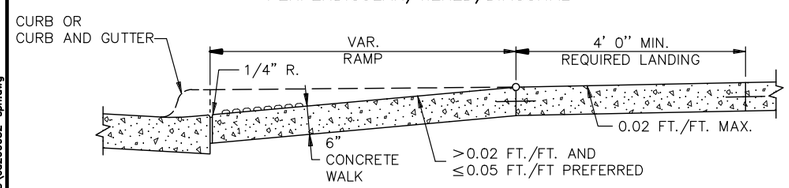

SECTION B–B

FAN

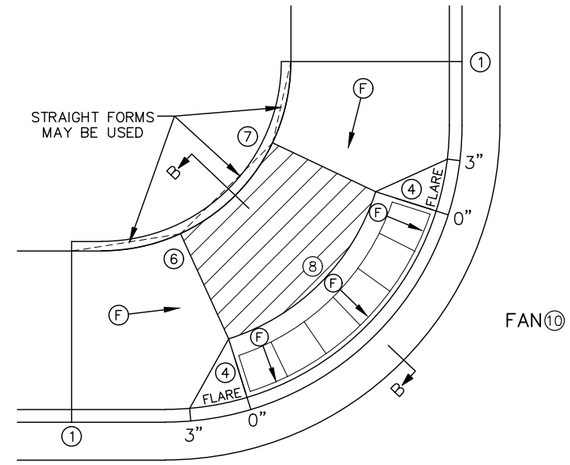

FAN 10

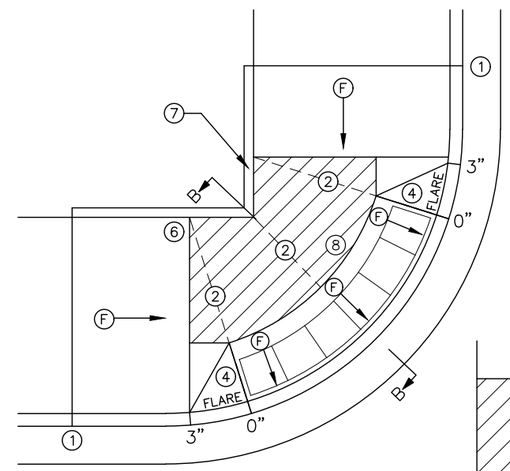

MODIFIED FAN 10

USED WHEN RIGHT–OF–WAY IS CONSTRAINED

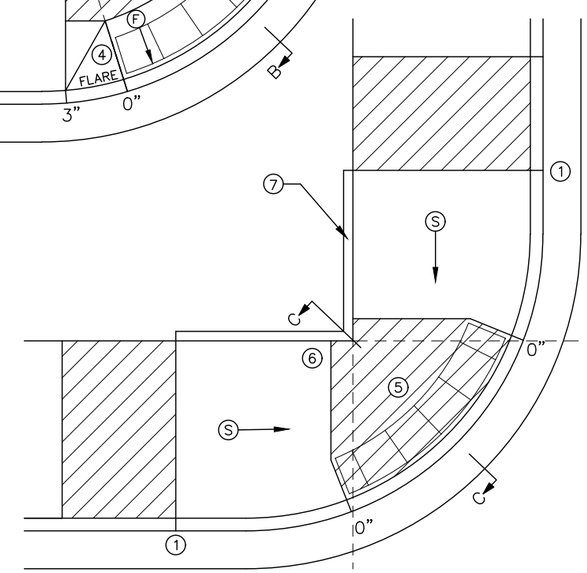

DEPRESSED CORNER

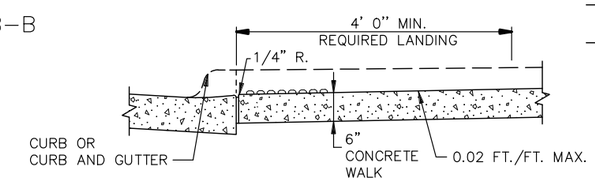

SECTION C–C

PARALLEL/DEPRESSED CORNER

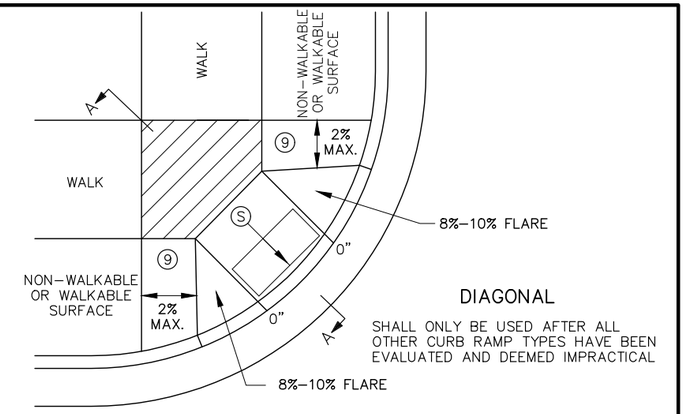

DIAGONAL

SHALL ONLY BE USED AFTER ALL OTHER CURB RAMP TYPES HAVE BEEN EVALUATED AND DEEMED IMPRACTICAL

NOTES:

LANDINGS SHALL BE LOCATED ANYWHERE THE PEDESTRIAN ACCESS ROUTE (PAR) CHANGES DIRECTION, AT THE TOP OF RAMPS THAT HAVE RUNNING SLOPES GREATER THAN 5.0%, AND IF THE APPROACHING WALK IS INVERSE GRADE GREATER THAN 2%.

INITIAL CURB RAMP LANDINGS SHALL BE CONSTRUCTED WITHIN 15' FROM THE BACK OF CURB, WITH 6' FROM THE BACK OF CURB BEING THE PREFERRED DISTANCE, ONLY APPLICABLE WHEN THE INITIAL RAMP RUNNING SLOPE IS OVER 5.0%.

SECONDARY CURB RAMP LANDINGS ARE REQUIRED FOR EVERY 30" OF VERTICAL RISE WHEN THE LONGITUDINAL RUNNING SLOPE IS GREATER THAN 5.0%.

CONTRACTION JOINTS SHALL BE CONSTRUCTED ALONG ALL GRADE BREAKS WITHIN THE PAR. 1/4" DEEP VISUAL JOINTS SHALL BE USED AT THE TOPS OF CONCRETE FLARES ADJACENT TO WALKABLE SURFACES.

ALL GRADE BREAKS WITHIN THE PAR SHALL BE PERPENDICULAR TO THE PATH OF TRAVEL. THUS BOTH SIDES OF A SLOPED WALKING SURFACE MUST BE EQUAL LENGTH. (EXCEPT AS STATED IN 6 BELOW.

TO ENSURE INITIAL RAMPS AND INITIAL LANDINGS ARE PROPERLY CONSTRUCTED, LANDINGS SHALL BE CAST SEPARATELY. FOLLOW SIDEWALK REINFORCEMENT DETAILS ON SHEET 6 AND THE ADA SPECIAL PROVISIONS – PROSECUTION OF WORK (ADA).

TOP OF CURB SHALL MATCH PROPOSED ADJACENT WALK GRADE.

WHEN THE BOULEVARD IS 4' WIDE OR LESS, THE TOP OF CURB TAPER SHALL MATCH THE RAMP SLOPES TO REDUCE NEGATIVE BOULEVARD SLOPES FROM THE TOP BACK OF CURB TO THE PAR.

ALL RAMP TYPES SHOULD HAVE A MINIMUM 3' LONG RAMP LENGTH.

4' MINIMUM WIDTH OF DETECTABLE WARNING IS REQUIRED FOR ALL RAMPS. DETECTABLE WARNINGS SHALL CONTINUOUSLY EXTEND FOR A MIN. OF 24" IN THE PATH OF TRAVEL. DETECTABLE WARNING TO COVER ENTIRE WIDTH OF SHARED–USE PATHS AND THE ENTIRE PAR WIDTH OF THE WALK. DETECTABLE WARNING SHOULD BE 6" LESS THAN THE PAR/TRAIL WIDTH. ARC LENGTH OF RADIAL DETECTABLE WARNINGS SHOULD NOT BE GREATER THAN 20 FEET.

RECTANGULAR DETECTABLE WARNINGS SHALL BE SETBACK 3" FROM THE BACK OF CURB. RADIAL DETECTABLE WARNINGS SHALL BE SETBACK 3" MINIMUM TO 6" MAXIMUM FROM THE BACK OF CURB.

1. MATCH FULL HEIGHT CURB.
2. 4' MINIMUM DEPTH LANDING REQUIRED ACROSS TOP OF RAMP.
3. 3" HIGH CURB WHEN USING A 3' LONG RAMP, 4" HIGH CURB WHEN USING A 4' LONG RAMP.
4. SEE SHEET 4 OF 6, TYPICAL SIDE TREATMENT OPTIONS, FOR DETAILS ON FLARES AND RETURNED CURBS, WHEN INITIAL LANDING IS AT FULL CURB HEIGHT.
5. DETECTABLE WARNINGS MAY BE PART OF THE 4' X 4' MIN. LANDING AREA IF IT IS NOT FEASIBLE TO CONSTRUCT THE LANDING OUTSIDE OF THE DETECTABLE WARNING AREA.
6. THE GRADE BREAK SHALL BE PERPENDICULAR TO THE BACK OF WALK. THIS WILL ENSURE THAT THE GRADE BREAK IS PERPENDICULAR TO THE DIRECTION OF TRAVEL. (TYPICAL FOR ALL)
7. WHEN ADJACENT TO GRASS, GRADING SHALL ALWAYS BE USED WHEN FEASIBLE. V CURB, IF USED, SHALL BE PLACED OUTSIDE THE SIDEWALK LIMITS WHEN RIGHT OF WAY ALLOWS. WHEN ADJACENT TO PARKING LOTS, CONCRETE OR BITUMINOUS TAPERS SHOULD BE USED OVER V CURB TO REDUCE TRIPPING HAZARDS AND FACILITATE SNOW & ICE REMOVAL.
8. A 7' MIN TOP RADIUS GRADE BREAK REQUIRED TO BE CONSTRUCTIBLE.
9. PAVE FULL WALK WIDTH.
10. "S" SLOPES ON FANS SHALL ONLY BE USED WHEN ALL OTHER FEASIBLE OPTIONS HAVE BEEN EVALUATED AND DEEMED IMPRACTICAL.

LEGEND

THESE LONGITUDINAL SLOPE RANGES SHALL BE THE STARTING POINT. IF SITE CONDITIONS WARRANT, LONGITUDINAL SLOPES UP TO 8.3% OR FLATTER ARE ALLOWED.

- S — INDICATES PEDESTRIAN RAMP – SLOPE SHALL BE BETWEEN 5.0% MINIMUM AND 8.3% MAXIMUM IN THE DIRECTION SHOWN AND THE CROSS SLOPE SHALL NOT EXCEED 2.0%.
- F — INDICATES PEDESTRIAN RAMP – SLOPE SHALL BE GREATER THAN 2.0% AND LESS THAN 5.0% IN THE DIRECTION SHOWN AND CROSS SLOPE SHALL NOT EXCEED 2.0%.
- LANDING AREA – 4' X 4' MIN. (5' X 5' MIN. PREFERRED) DIMENSIONS AND MAX 2.0% SLOPE IN ALL DIRECTIONS. LANDING SHALL BE FULL WIDTH OF INCOMING PARS.
- X" — CURB HEIGHT

REVISION:

APPROVED: JANUARY 23, 2017

OPERATIONS ENGINEER

MINNESOTA DEPARTMENT OF TRANSPORTATION

STANDARD PLAN 5-297.250 | 1 OF 6

APPROVED: 1–23–2017
REVISED:

STATE DESIGN ENGINEER

PEDESTRIAN CURB RAMP DETAILS

RAMSEY COUNTY
WHITE BEAR AVENUE (CSAH 65) & GERVAIS AVENUE IMPROVEMENTS

SHEET NO. 12 OF 51 SHEETS

1:28:12 PM
4/23/2020
c:\pw_working\projectwise\alliant\d0135718\cd200052-spn.dwg

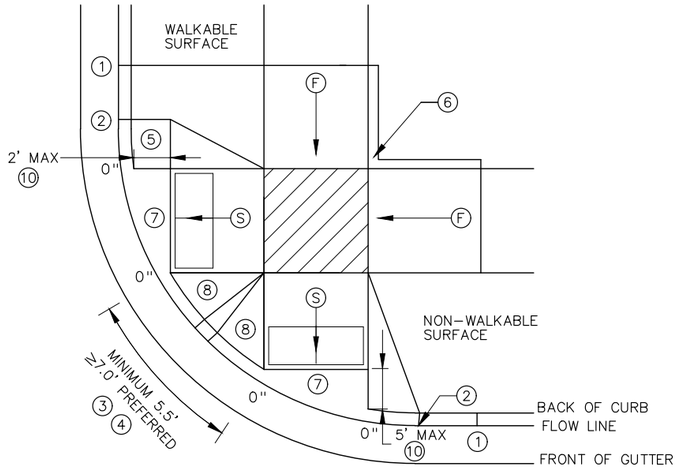

COMBINED DIRECTIONAL ⑨

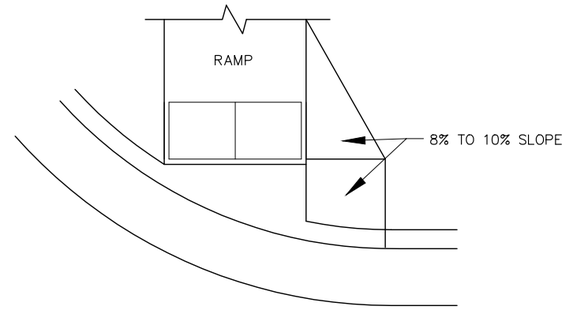

DIRECTIONAL RAMP WALKABLE FLARE

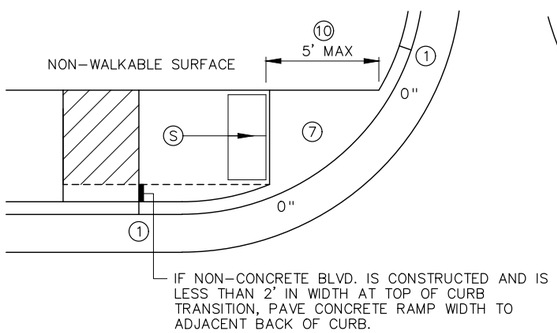

STANDARD ONE-WAY DIRECTIONAL ⑨

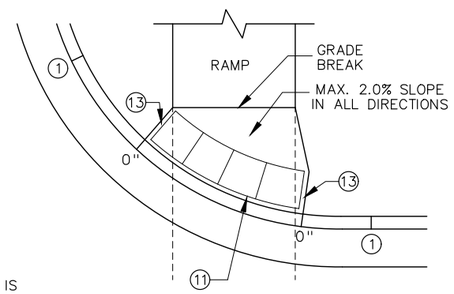

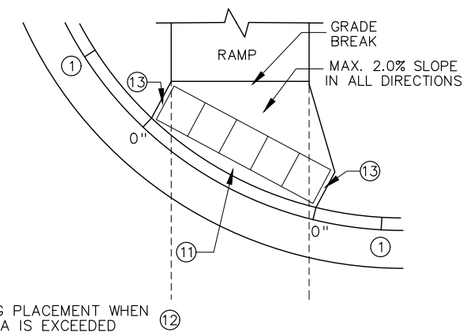

ONE-WAY DIRECTIONAL WITH DETECTABLE WARNING AT BACK OF CURB

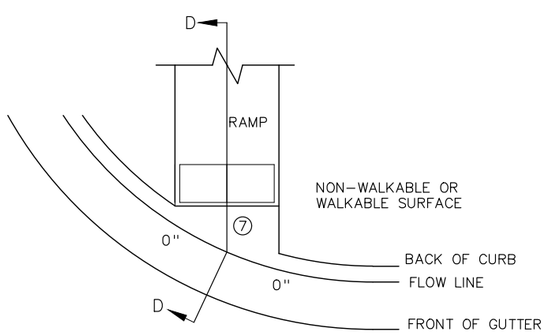

CURB FOR DIRECTIONAL RAMPS ⑭

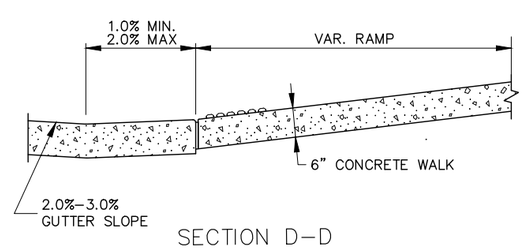

SECTION D-D

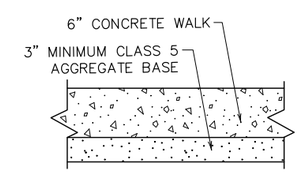

TYPICAL SIDEWALK SECTION WITHIN INTERSECTION CORNER

NOTES:

LANDINGS SHALL BE LOCATED ANYWHERE THE PEDESTRIAN ACCESS ROUTE (PAR) CHANGES DIRECTION, AT THE TOP OF RAMPS THAT HAVE RUNNING SLOPES GREATER THAN 5.0%, AND IF THE APPROACHING WALK IS INVERSE GRADE.

INITIAL CURB RAMP LANDINGS SHALL BE CONSTRUCTED WITHIN 15' FROM THE BACK OF CURB, WITH 6' FROM THE BACK OF CURB BEING THE PREFERRED DISTANCE, ONLY APPLICABLE WHEN THE INITIAL RAMP RUNNING SLOPE IS OVER 5.0%.

SECONDARY CURB RAMP LANDINGS ARE REQUIRED FOR EVERY 30" OF VERTICAL RISE WHEN THE LONGITUDINAL SLOPE IS GREATER THAN 5.0%.

CONTRACTION JOINTS SHALL BE CONSTRUCTED ALONG ALL GRADE BREAKS WITHIN THE PAR. 1/4" DEEP VISUAL JOINTS SHALL BE USED AT THE TOP GRADE BREAK OF CONCRETE FLARES ADJACENT TO WALKABLE SURFACES.

ALL GRADE BREAKS WITHIN THE PAR SHALL BE PERPENDICULAR TO THE PATH OF TRAVEL. THUS BOTH SIDES OF A SLOPED WALKING SURFACE MUST BE EQUAL LENGTH.

TO ENSURE INITIAL RAMPS AND INITIAL LANDINGS ARE PROPERLY CONSTRUCTED, LANDINGS SHALL BE CAST SEPARATELY. FOLLOW SIDEWALK REINFORCEMENT DETAILS ON SHEET 6 AND THE ADA SPECIAL PROVISION (PROSECUTION OF WORK).

TOP OF CURB SHALL MATCH PROPOSED ADJACENT WALK GRADE.

WHEN THE BOULEVARD IS 4' WIDE OR LESS, THE TOP OF CURB TAPER SHALL MATCH THE RAMP SLOPES TO REDUCE NEGATIVE BOULEVARD SLOPES FROM THE TOP BACK OF CURB TO THE PAR.

ALL RAMP TYPES SHOULD HAVE A MINIMUM 3' LONG RAMP LENGTH.

4' MINIMUM WIDTH OF DETECTABLE WARNING IS REQUIRED FOR ALL RAMPS. DETECTABLE WARNINGS SHALL CONTINUOUSLY EXTEND FOR A MIN. OF 24" IN THE PATH OF TRAVEL. DETECTABLE WARNING TO COVER ENTIRE WIDTH OF SHARED-USE PATH AND THE ENTIRE PAR WIDTH OF THE WALK. DETECTABLE WARNING SHOULD BE 6" LESS THAN THE PAR/PATH WIDTH. ARC LENGTH OF RADIAL DETECTABLE WARNINGS SHOULD NOT BE GREATER THAN 20 FEET.

RADIAL DETECTABLE WARNINGS SHALL BE SETBACK 3" MINIMUM TO 6" MAXIMUM FROM THE BACK OF CURB. SEE NOTES ⑩ & ⑪ FOR INFORMATION REGARDING RECTANGULAR DETECTABLE WARNING PLACEMENT.

① MATCH FULL CURB HEIGHT.

② 3" HIGH CURB WHEN USING A 3' LONG RAMP
4" HIGH CURB WHEN USING A 4' LONG RAMP.

③ 3" MINIMUM CURB HEIGHT (5.5' MIN. DISTANCE REQUIRED BETWEEN DOMES)
4" PREFERRED (7' MIN. DISTANCE REQUIRED BETWEEN DOMES).

④ THE "BUMP" IN BETWEEN THE RAMPS SHOULD NOT BE IN THE PATH OF TRAVEL FOR COMBINED DIRECTIONAL RAMPS. IF THIS OCCURS MODIFY THE RAMP LOCATION OR SWITCH RAMP TO A FAN/DEPRESSED CORNER.

⑤ WHEN USING CONCRETE PAVED FLARES ON THE OUTSIDE OF DIRECTIONAL RAMPS, AND ADJACENT TO A WALKABLE SURFACE, DIRECTIONAL RAMP FLARES SHOULD BE USED. SEE THE DETAIL ON THIS SHEET.

⑥ GRADING SHALL ALWAYS BE USED WHEN FEASIBLE. V CURB, IF USED, SHALL BE PLACED OUTSIDE THE SIDEWALK LIMITS WHEN RIGHT OF WAY ALLOWS. WHEN ADJACENT TO PARKING LOTS, CONCRETE OR BITUMINOUS TAPERS SHOULD BE USED OVER V CURB TO REDUCE TRIPPING HAZARDS AND FACILITATE SNOW & ICE REMOVAL.

⑦ MAX. 2.0% SLOPE IN ALL DIRECTIONS IN FRONT OF GRADE BREAK AND DRAIN TO FLOW LINE. SHALL BE CONSTRUCTED INTEGRAL WITH CURB AND GUTTER.

⑧ 8% TO 10% WALKABLE FLARE.

⑨ PLACE DOMES AT THE BACK OF CURB WHEN ALLOWABLE SETBACK CRITERIA IS EXCEEDED.

⑩ FRONT EDGE OF DETECTABLE WARNING SHALL BE SET BACK 2' MAXIMUM WHEN ADJACENT TO WALKABLE SURFACE, AND 5' MAXIMUM WHEN ADJACENT TO NON-WALKABLE SURFACE WITH ONE CORNER SET 3" FROM BACK OF CURB. A WALKABLE SURFACE IS DEFINED AS A PAVED SURFACE ADJACENT TO A CURB RAMP WITHOUT RAISED OBSTACLES THAT COULD MISTAKENLY BE TRAVERSED BY A USER WHO IS VISUALLY IMPAIRED.

⑪ RECTANGULAR DETECTABLE WARNINGS MAY BE SETBACK UP TO 9" FROM THE BACK OF CURB WITH CORNERS SET 3" FROM BACK OF CURB. IF 9" SETBACK IS EXCEEDED USE RADIAL DETECTABLE WARNINGS.

⑫ FOR DIRECTIONAL RAMPS WITH THE DETECTABLE WARNINGS PLACED AT THE BACK OF CURB, THE DETECTABLE WARNINGS SHALL COVER THE ENTIRE WIDTH OF THE WALK/PATH. THIS ENSURES A DETECTABLE EDGE AND HELPS ELIMINATE THE CURB TAPER OBSTRUCTING THE PATH OF PEDESTRIAN TRAVEL.

⑬ THE CONCRETE WALK SHALL BE FORMED AND CONSTRUCTED PERPENDICULAR TO THE BACK OF CURB. MAINTAIN 3" BETWEEN EDGE OF DOMES AND EDGE OF CONCRETE.

⑭ TO BE USED FOR ALL DIRECTIONAL RAMPS, EXCEPT WHERE DOMES ARE PLACED ALONG THE BACK OF CURB.

LEGEND

THESE LONGITUDINAL SLOPE RANGES SHALL BE THE STARTING POINT. IF SITE CONDITIONS WARRANT, LONGITUDINAL SLOPES UP TO 8.3% OR FLATTER ARE ALLOWED.

Ⓢ INDICATES PEDESTRIAN RAMP – SLOPE SHALL BE BETWEEN 5.0% MINIMUM AND 8.3% MAXIMUM IN THE DIRECTION SHOWN AND THE CROSS SLOPE SHALL NOT EXCEED 2.0%.

Ⓕ INDICATES PEDESTRIAN RAMP – SLOPE SHALL BE GREATER THAN 2.0% AND LESS THAN 5.0% IN THE DIRECTION SHOWN AND CROSS SLOPE SHALL NOT EXCEED 2.0%.

LANDING AREA – 4' X 4' MIN. (5' X 5' MIN. PREFERRED) DIMENSIONS AND MAX 2.0% SLOPE IN ALL DIRECTIONS. LANDING SHALL BE FULL WIDTH OF INCOMING PARS.

X" CURB HEIGHT

REVISION:

APPROVED: JANUARY 23, 2017

OPERATIONS ENGINEER

MINNESOTA DEPARTMENT OF TRANSPORTATION

STANDARD PLAN 5-297.250 | 2 OF 6

APPROVED: 1-23-2017
REVISED:

STATE DESIGN ENGINEER

PEDESTRIAN CURB RAMP DETAILS

RAMSEY COUNTY
WHITE BEAR AVENUE (CSAH 65) & GERVAIS AVENUE IMPROVEMENTS

SHEET NO. 13 OF 51 SHEETS

1:28:12 PM
4/23/2020
c:\pw_working\projectwise\dillont\d0135718\cd200052-spn.dwg

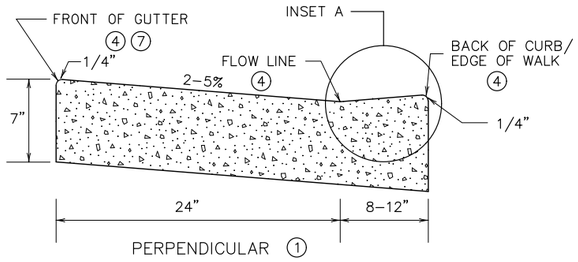

PERPENDICULAR 1

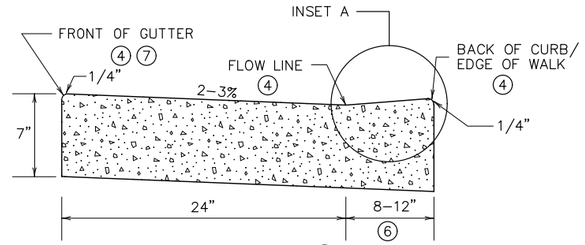

NON PERPENDICULAR 2

PEDESTRIAN ACCESS ROUTE CURB & GUTTER DETAIL

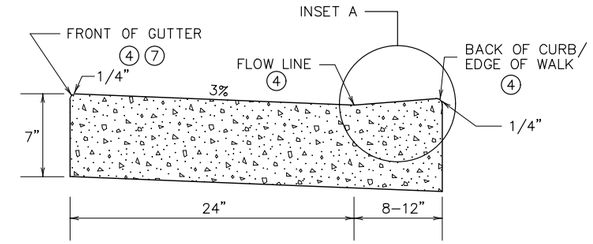

FOR CURB MACHINE PLACEMENT AROUND RADIUS 3

(REGARDLESS OF RAMP TYPE)

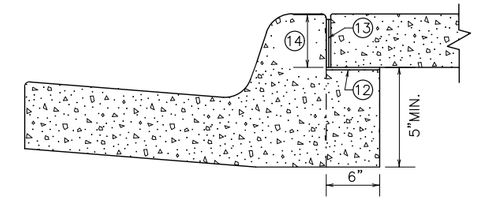

OPTIONAL SILL CURB WHEN SIDEWALK IS AT BACK OF CURB

CONCRETE SILL TO BE USED ONLY WHEN SPECIFIED IN THE PLAN.

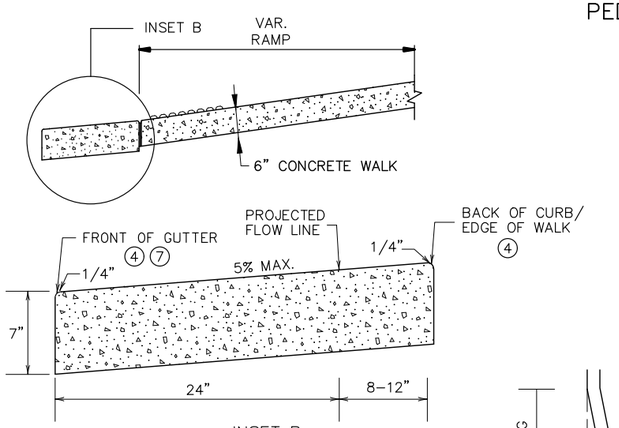

INSET B

OUTFLOW GUTTER 8

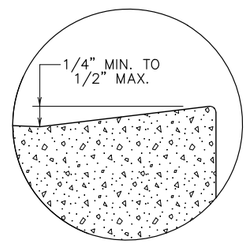

INSET A

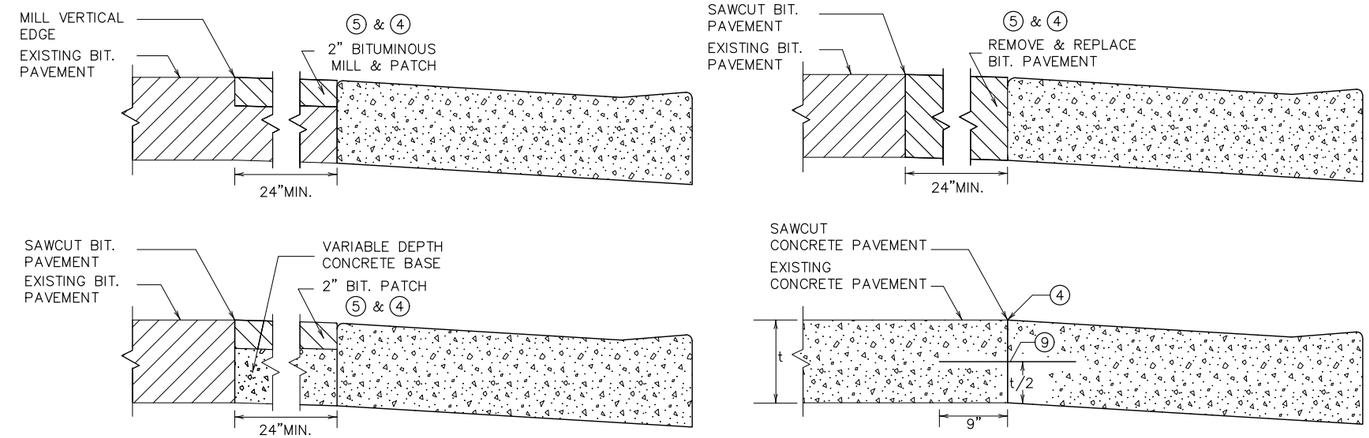

ONLY ALLOWED PER ENGINEER'S APPROVAL

PAVEMENT TREATMENT OPTIONS IN FRONT OF CURB & GUTTER

FOR USE ON CURB RAMP RETROFITS

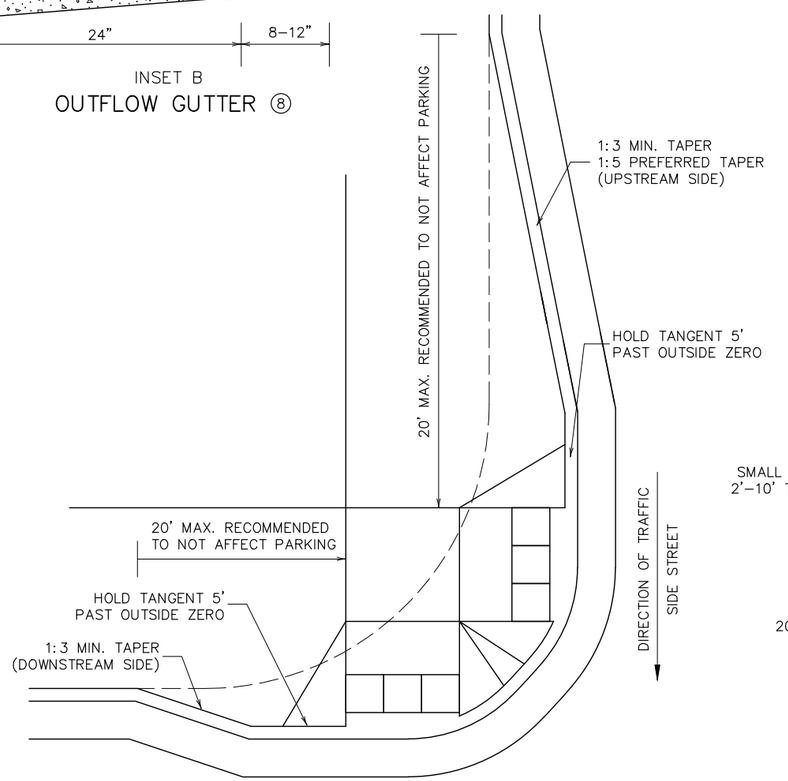

ADA CURB EXTENSION WITH COMPOUND RADIUS (BUMP OUT)11

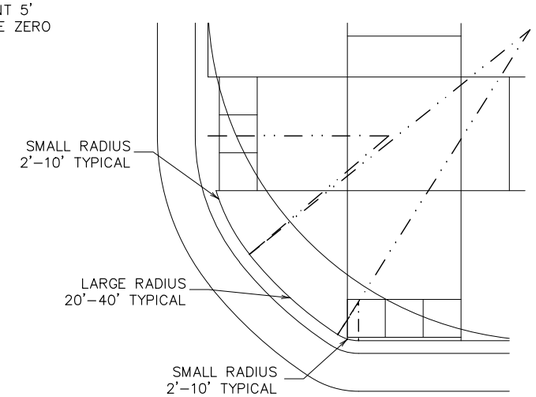

COMBINED DIRECTIONAL 10
(COMPOUND RADIUS)

NOTES:

POSITIVE FLOW LINE DRAINAGE SHALL BE MAINTAINED THROUGH THE PEDESTRIAN ACCESS ROUTE (PAR) AT A 2% MAXIMUM.

NO PONDING SHALL BE PRESENT IN THE PAR.

ANY VERTICAL LIP THAT OCCURS AT THE FLOW LINE SHALL NOT BE GREATER THAN 1/4 INCH.

1. FOR USE AT CURB CUTS WHERE THE PEDESTRIAN'S PATH OF TRAVEL IS ASSUMED PERPENDICULAR TO THE GUTTER FLOW LINE. RAMP TYPES INCLUDE: PERPENDICULAR, TIERED PERPENDICULAR, PARALLEL, AND DIAGONAL RAMPS.
2. FOR USE AT CURB RAMPS WHERE THE PEDESTRIAN'S PATH OF TRAVEL IS ASSUMED NON PERPENDICULAR TO THE GUTTER FLOW LINE. RAMP TYPES INCLUDE: FANS & DEPRESSED CORNERS.
3. BEGIN GUTTER SLOPE TRANSITION 10' OUTSIDE OF ALL CURB RAMPS.
4. THERE SHALL BE NO VERTICAL DISCONTINUITIES GREATER THAN 1/4".
5. ELEVATION CHANGE TAKES PLACE FROM THE EXISTING TO NEW FRONT OF GUTTER. PATCH IS USED TO MATCH THE NEW GUTTER FACE INTO THE EXISTING ROADWAY.
6. VARIABLE WIDTH FOR DIRECTIONAL CURB APPLICATIONS. SEE SHEET 2 FOR DIRECTIONAL CURB SLOPE REQUIREMENTS.
7. TOP FRONT OF GUTTER SHALL BE CONSTRUCTED FLUSH WITH PROPOSED ADJACENT PAVEMENT ELEVATION. TOP 1.5" OF THE GUTTER FACE MUST BE A FORMED EDGE. PAR GUTTER SHALL NOT BE OVERLAID.
8. SHOULD BE USED AT VERTICALLY CONSTRAINED AREAS WHEN AT A DRAINAGE HIGH POINT OR SUPER ELEVATED ROADWAY SEGMENTS
9. DRILL AND GROUT NO. 4 EPOXY-COATED 18" LONG TIE BARS AT 30" CENTER TO CENTER INTO EXISTING CONCRETE PAVEMENT 1' MINIMUM FROM ALL JOINTS.
10. HELPS PROVIDE TWO SEPARATE RAMPS, REDUCES THE DOME SETBACK LENGTH AND MINIMIZES DIRECTIONAL CURB. THIS RADIUS DESIGN CLOSELY FOLLOWS THE TURNING VEHICLE PATH WHILE OPTIMIZING CURB RAMP LENGTH.
11. CURB EXTENSIONS SHOULD BE USED IN VERTICALLY CONSTRAINED AREAS, USUALLY IN DOWNTOWN ROADWAY SEGMENTS WHERE ON-STREET PARKING IS AVAILABLE. CURB EXTENSIONS SHOULD BE CONSIDERED FOR APS INTERSECTIONS WHERE SPACE IS LIMITED. PUSH BUTTONS MUST MEET APS CRITERIA AS DESCRIBED IN THE PUSH BUTTON LOCATION DETAIL SHEET.
12. PLACE BOND BREAKER BETWEEN WALK AND TOP OF SILL.
13. 1/2" PREFORMED JOINT FILLER PER MNDOT SPEC. 3702.
14. DIMENSION TO BE SAME AS SIDEWALK THICKNESS, 4" MIN.

REVISION:

APPROVED: JANUARY 23, 2017

OPERATIONS ENGINEER

MINNESOTA DEPARTMENT OF TRANSPORTATION

STATE DESIGN ENGINEER

APPROVED: 1-23-2017

REVISED:

STANDARD PLAN 5-297.250 | 3 OF 6

PEDESTRIAN CURB RAMP DETAILS

RAMSEY COUNTY
WHITE BEAR AVENUE (CSAH 65) & GERVAIS AVENUE IMPROVEMENTS

SHEET NO. 14 OF 51 SHEETS

1:28:15 PM
4/23/2020
c:\pw_working\projectwise\allant\d0135718\cd200052-spn.dwg

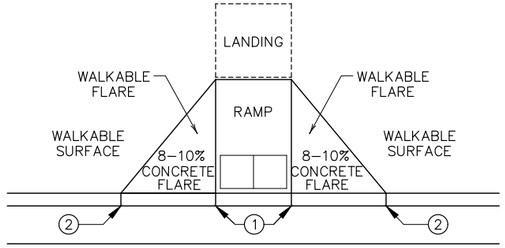

PAVED FLARES
ADJACENT TO WALKABLE SURFACE

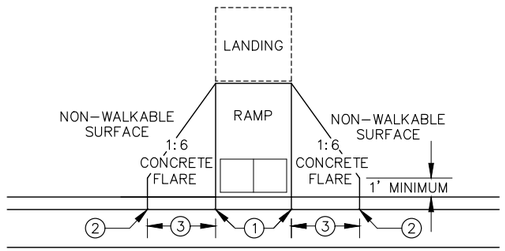

PAVED FLARES
ADJACENT TO NON–WALKABLE SURFACE

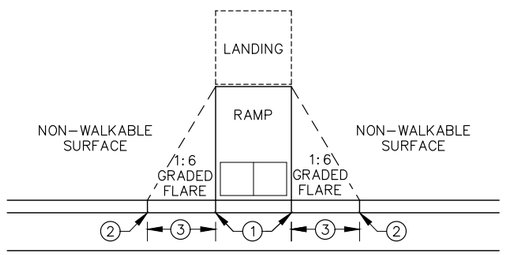

GRADED FLARES

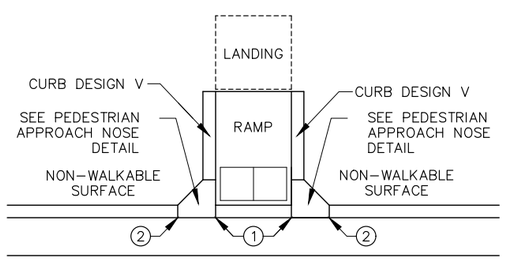

RETURNED CURB ⑤

TYPICAL SIDE TREATMENT OPTIONS ④ ⑪

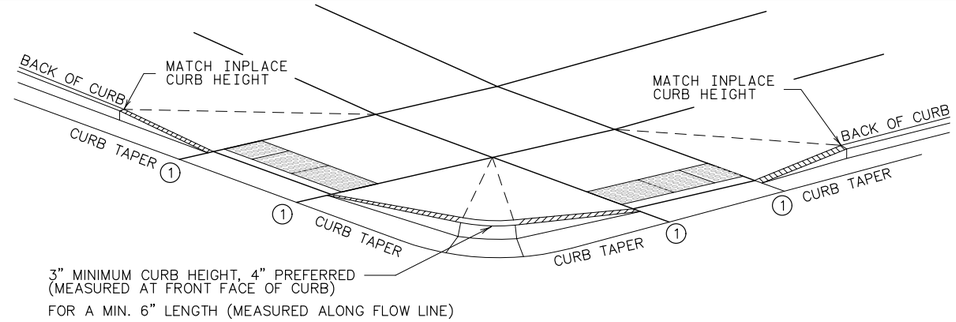

DETECTABLE EDGE WITH ⑧
CURB AND GUTTER

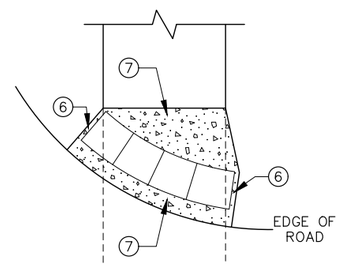

RADIAL DETECTABLE WARNING

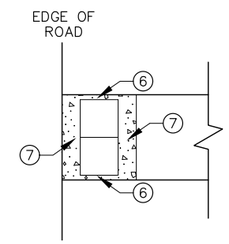

RECTANGULAR DETECTABLE WARNING

DETECTABLE EDGE WITHOUT CURB AND GUTTER

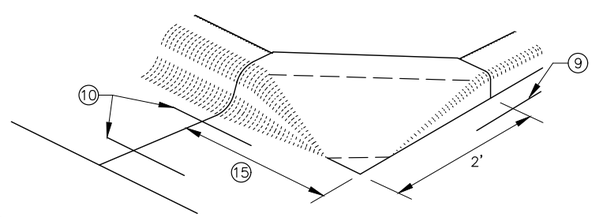

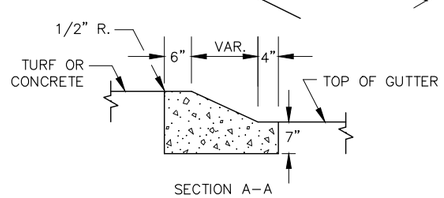

SECTION A–A

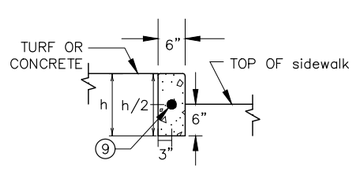

SECTION B–B

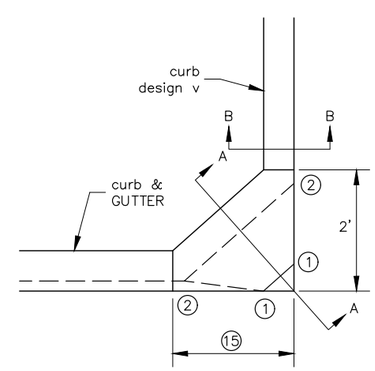

PEDESTRIAN APPROACH
NOSE DETAIL
(FOR RETURNED CURB
SIDE TREATMENT)

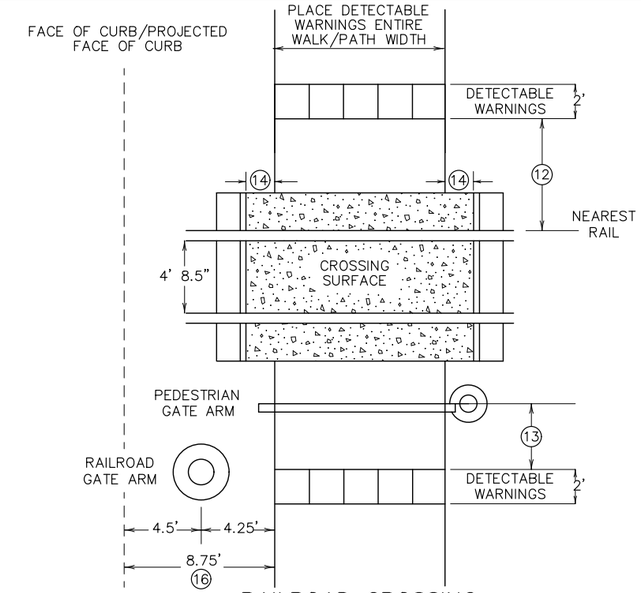

RAILROAD CROSSING
PLAN VIEW

NOTES:

SEE STANDARD PLATE 7038 AND THIS SHEET FOR ADDITIONAL DETAILS ON DETECTABLE WARNING.

A WALKABLE SURFACE IS DEFINED AS A PAVED SURFACE ADJACENT TO A CURB RAMP WITHOUT RAISED OBSTACLES THAT COULD MISTAKENLY BE TRAVERSED BY A USER WHO IS VISUALLY IMPAIRED.

CONCRETE FLARE LENGTHS ADJACENT TO NON–WALKABLE SURFACES SHOULD BE LESS THAN 8' LONG MEASURED ALONG THE RAMPS FROM THE BACK OF CURB.

① 0" CURB HEIGHT.

② FULL CURB HEIGHT.

③ 2' FOR 4" HIGH CURB AND 3' FOR 6" HIGH CURB.

④ SIDE TREATMENTS ARE APPLICABLE TO ALL RAMP TYPES AND SHOULD BE IMPLEMENTED AS NEEDED AS FIELD CONDITIONS DICTATE. THE ENGINEER SHALL DETERMINE THE RAMP SIDE TREATMENTS BASED ON MAINTENANCE OF BOTH ROADWAY AND SIDEWALK, ADJACENT PROPERTY CONSIDERATIONS, AND MITIGATING CONSTRUCTION IMPACTS.

⑤ TYPICALLY USED FOR MEDIANS AND ISLANDS.

⑥ WHEN NO CONCRETE FLARES ARE PROPOSED, THE CONCRETE WALK SHALL BE FORMED AND CONSTRUCTED PERPENDICULAR TO THE EDGE OF ROADWAY. MAINTAIN 3" MAX. BETWEEN EDGE OF DOMES AND EDGE OF CONCRETE.

⑦ IF NO CURB AND GUTTER IS PLACED IN RURAL SECTIONS, DETECTABLE WARNINGS SHALL BE PLACED 1' FROM THE EDGE OF BITUMINOUS ROADWAY AND/OR BITUMINOUS SHARED–USE PATH TO PROVIDE VISUAL CONTRAST.

⑧ ALL CONSTRUCTED CURBS MUST HAVE A CONTINUOUS DETECTABLE EDGE FOR THE VISUALLY IMPAIRED. THIS DETECTABLE EDGE REQUIRES DETECTABLE WARNINGS WHEREVER THERE IS ZERO–INCH HIGH CURB. CURB TAPERS ARE CONSIDERED A DETECTABLE EDGE WHEN THE TAPER STARTS WITHIN 3" OF THE EDGE OF THE DETECTABLE WARNINGS AND UNIFORMLY RISES TO A 3–INCH MINIMUM CURB HEIGHT. ANY CURB NOT PART OF A CURB TAPER AND LESS THAN 3 INCHES IN HEIGHT IS NOT CONSIDERED A DETECTABLE EDGE AND THEREFORE IS NOT COMPLIANT WITH ACCESSIBILITY STANDARDS.

⑨ DRILL AND GROUT 1 – NO. 4 12" LONG REINFORCEMENT BAR (EPOXY COATED) WITH 3" MIN. COVER. REINFORCEMENT BARS ARE NOT NEEDED IF THE APPROACH NOSE IS POURED INTEGRAL WITH THE V CURB.

⑩ DRILL AND GROUT 2 – NO. 4 12" LONG REINFORCEMENT BARS (EPOXY COATED) WITH 3" MIN. COVER. REINFORCEMENT BARS ARE NOT NEEDED IF THE APPROACH NOSE IS POURED INTEGRAL WITH THE CURB AND GUTTER.

⑪ SIDE TREATMENT EXAMPLES SHOWN ARE WHEN THE INITIAL LANDING IS APPROXIMATELY LEVEL WITH THE FULL HEIGHT CURB (I.E. 6' LONG RAMP FOR 6" HIGH CURB). WHEN THE INITIAL LANDING IS MORE THAN 1" BELOW FULL HEIGHT CURB REFER TO SHEETS 1 & 2 TO MODIFY THE CURB HEIGHT TAPERS AND MAINTAIN POSITIVE BOULEVARD DRAINAGE.

⑫ NEAREST EDGE OF DETECTABLE WARNING SURFACES SHALL BE PLACED 12' MINIMUM TO 15' MAXIMUM FROM THE NEAREST RAIL. FOR SKEWED RAILWAYS IN NO INSTANCE SHALL THE DETECTABLE WARNING BE CLOSER THAN 12' MEASURED PERPENDICULAR TO THE NEAREST RAIL.

⑬ WHEN PEDESTRIAN GATES ARE PROVIDED, DETECTABLE WARNING SURFACES SHALL BE PLACED ON THE SIDE OF THE GATES OPPOSITE THE RAIL, 2' FROM THE APPROACHING SIDE OF THE GATE ARM. THIS CRITERIA GOVERNS OVER NOTE ⑫.

⑭ CROSSING SURFACE SHALL EXTEND 2' MINIMUM PAST THE OUTSIDE EDGE OF WALK OR SHARED–USE PATH.

⑮ 3' FOR MEDIANS AND SPLITTER ISLANDS. NOSE CAN BE REDUCED TO 2' ON FREE RIGHT ISLANDS.

⑯ SIDEWALK TO BE PLACED 8.75' MIN. FROM THE FACE OF CURB/PROJECTED FACE OF CURB. THIS ENSURES MIN. CLEARANCE BETWEEN THE SIDEWALK AND GATE ARM COUNTERWEIGHT SUPPORTS.

REVISION:

APPROVED: JANUARY 23, 2017

OPERATIONS ENGINEER

MINNESOTA DEPARTMENT OF TRANSPORTATION

STANDARD PLAN 5-297.250 | 4 OF 6

APPROVED: 1–23–2017
REVISED:

STATE DESIGN ENGINEER

PEDESTRIAN CURB RAMP DETAILS

RAMSEY COUNTY
WHITE BEAR AVENUE (CSAH 65) & GERVAIS AVENUE IMPROVEMENTS

SHEET NO. 15 OF 51 SHEETS

1:28:16 PM
4/23/2020
c:\pw_working\projectwise\aliant\d0135718\cd200052-spn.dwg

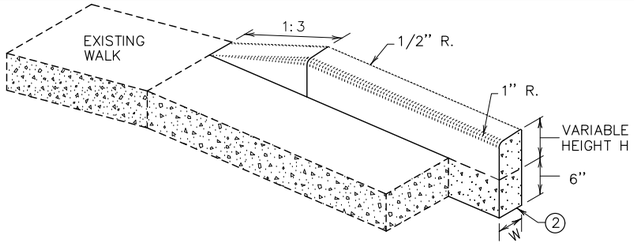

V CURB ADJACENT TO LANDSCAPE

CURB WITHIN SIDEWALK LIMITS

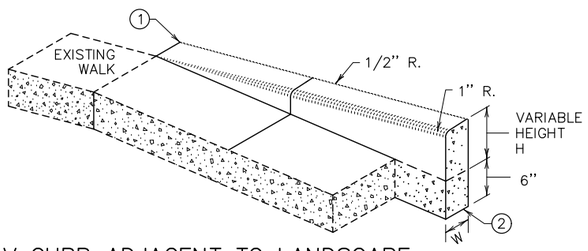

V CURB ADJACENT TO LANDSCAPE

CURB OUTSIDE SIDEWALK LIMITS

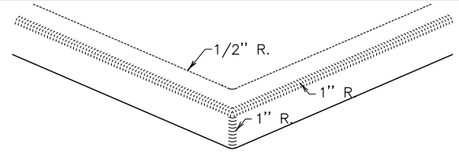

V CURB INTERSECTION

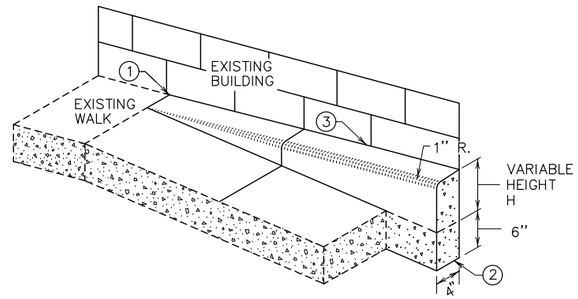

V CURB ADJACENT TO BUILDING OR BARRIER

CONCRETE CURB DESIGN V	
CURB HEIGHT H	CURB WIDTH W
< 6"	4"
≥ 6"	6"

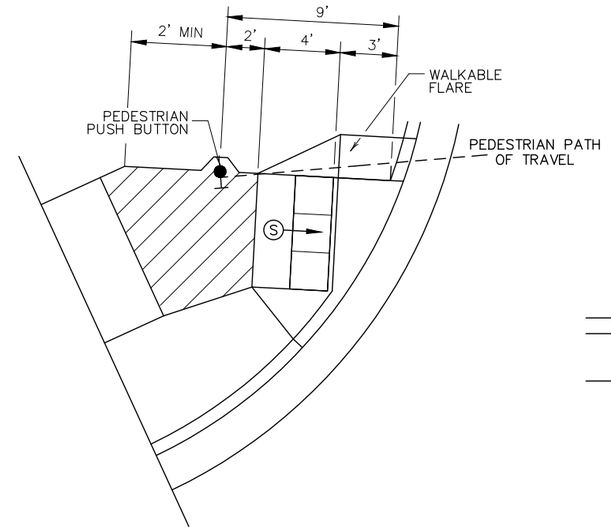

SEMI–DIRECTIONAL RAMP (3,4,9)

3' DOME SETBACK, 4' LONG RAMP AND PUSH BUTTON 9' FROM THE BACK OF CURB

PRIMARILY USED FOR APS APPLICATIONS WHERE THE PAR DOES NOT CONTINUE PAST THE PUSH BUTTON (DEAD–END SIDEWALK)

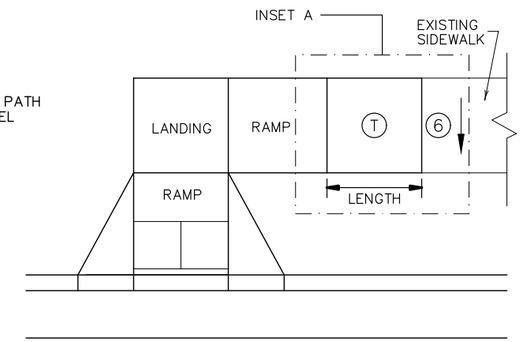

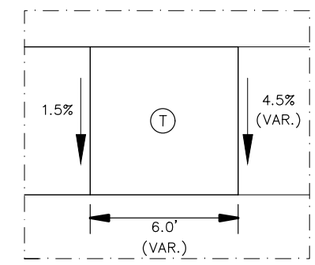

TRANSITION PANEL ④⑤

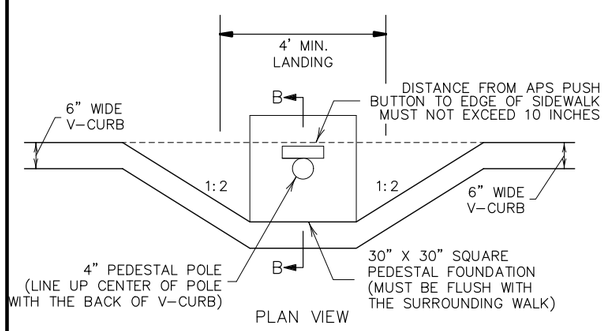

PLAN VIEW

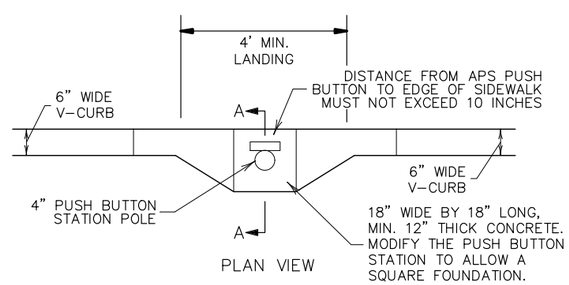

PLAN VIEW

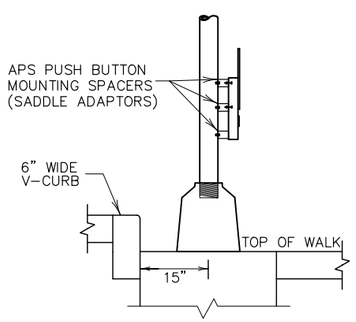

SECTION B–B

SIGNAL PEDESTAL & PUSH BUTTON (V–CURB)

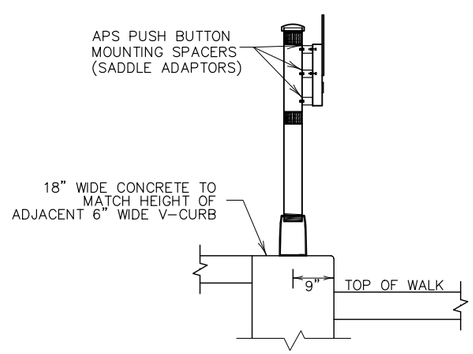

SECTION A–A

PUSH BUTTON STATION (V–CURB)

NOTES:

A WALKABLE FLARE IS AN 8–10% CONCRETE FLARE THAT IS REQUIRED WHEN THE FLARE IS ADJACENT TO A WALKABLE SURFACE, OR WHEN THE PEDESTRIAN PATH OF TRAVEL OF A PUSH BUTTON TRAVERSES THE FLARE.

ALL V CURB CONTRACTION JOINTS SHALL MATCH CONCRETE WALK JOINTS.

WHERE RIGHT–OF–WAY ALLOWS, USE OF V CURB SHOULD BE MINIMIZED. GRADING ADJACENT TURF OR SLOPING ADJACENT PAVEMENT IS PREFERRED.

V CURB SHALL BE PLACED OUTSIDE THE SIDEWALK LIMITS WHEN RIGHT OF WAY ALLOWS.

V CURB NEXT TO BUILDING SHALL BE A 4" WIDTH AND SHALL MATCH PREVIOUS TOP OF SIDEWALK ELEVATIONS.

1. END TAPERS AT TRANSITION SECTION SHALL MATCH INPLACE SIDEWALK GRADES.
2. ALL V CURB SHALL MATCH BOTTOM OF ADJACENT WALK.
3. EDGE BETWEEN NEW V CURB AND INPLACE STRUCTURE SHALL BE SEALED AND BOND BREAKER SHALL BE USED BETWEEN EXISTING STRUCTURE AND PLACED V–CURB.
4. THE MAX. RATE OF CROSS SLOPE TRANSITIONING IS 1' LINEAR FOOT OF SIDEWALK PER HALF PERCENT CROSS SLOPE. WHEN PAR WIDTH IS GREATER THAN 6' OR THE RUNNING SLOPE IS GREATER THAN 5%, DOUBLE THE CALCULATED TRANSITION LENGTH.
5. TRANSITION PANELS ARE TO ONLY BE USED AFTER THE RAMP, OR IF NEEDED, LANDING ARE AT THE FULL CURB HEIGHT (TYPICAL SECTION).
6. EXISTING CROSS SLOPE GREATER THAN 2.0%.

LEGEND

THESE LONGITUDINAL SLOPE RANGES SHALL BE THE STARTING POINT. IF SITE CONDITIONS WARRANT, LONGITUDINAL SLOPES UP TO 8.3% OR FLATTER ARE ALLOWED.

- (S) INDICATES PEDESTRIAN RAMP – SLOPE SHALL BE BETWEEN 5.0% MINIMUM AND 8.3% MAXIMUM IN THE DIRECTION SHOWN AND THE CROSS SLOPE SHALL NOT EXCEED 2.0%.
- LANDING AREA – 4' X 4' MIN. (5' X 5' MIN. PREFERRED) DIMENSIONS AND MAX 2.0% SLOPE IN ALL DIRECTIONS. LANDING SHALL BE FULL WIDTH OF INCOMING PARS.
- (T) TRANSITION PANEL(S) – TO BE USED FOR TRANSITIONING THE CROSS–SLOPE OF A RAMP TO THE EXISTING WALK CROSS–SLOPE. RATE OF TRANSITION SHOULD BE 0.5% PER 1 LINEAR FOOT OF WALK. SEE THIS SHEET FOR ADDITIONAL INFORMATION.

REVISION:

APPROVED: JANUARY 23, 2017

OPERATIONS ENGINEER

MINNESOTA DEPARTMENT OF TRANSPORTATION

STANDARD PLAN 5-297.250 | 5 OF 6

APPROVED: 1–23–2017

REVISED:

STATE DESIGN ENGINEER

PEDESTRIAN CURB RAMP DETAILS

RAMSEY COUNTY
WHITE BEAR AVENUE (CSAH 65) & GERVAIS AVENUE IMPROVEMENTS

SHEET NO. 16 OF 51 SHEETS

1:28:17 PM
4/23/2020
c:\pw_working\projectwise\ailiant\d0135718\cd200052-spn.dwg

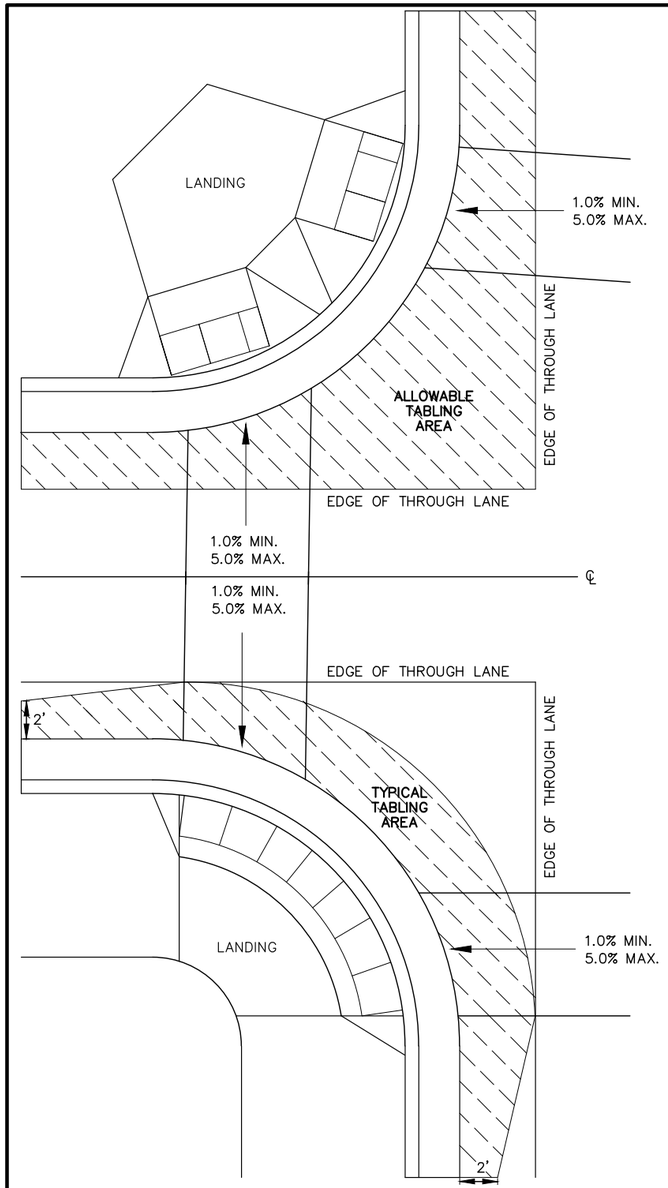

CURB LINE AND ROAD CROSSING ADJUSTMENTS

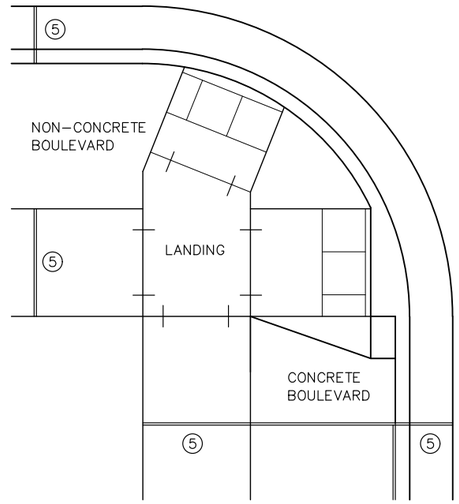

EXPANSION MATERIAL PLACEMENT FOR CONCRETE AND BITUMINOUS ROADWAYS

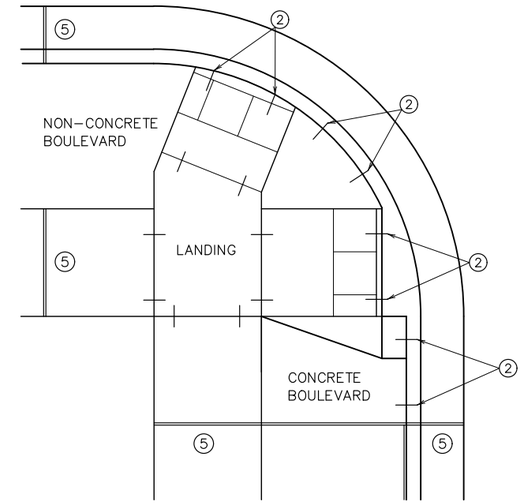

OPTIONAL CURB LINE REINFORCEMENT PLACEMENT ON BITUMINOUS ROADWAYS ④

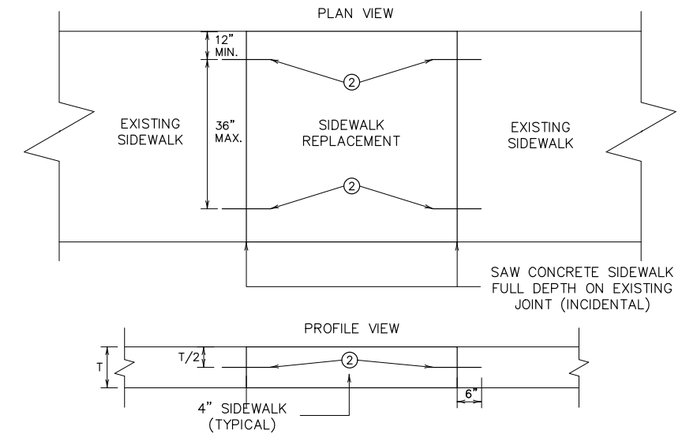

OPTIONAL SIDEWALK REINFORCEMENT

SIDEWALK REINFORCEMENT TO BE USED ONLY WHEN SPECIFIED IN THE PLAN.

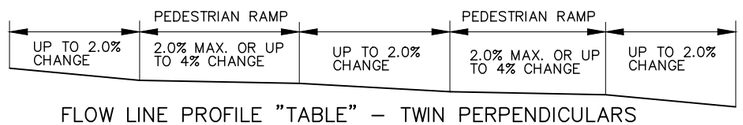

FLOW LINE PROFILE "TABLE" – TWIN PERPENDICULARS

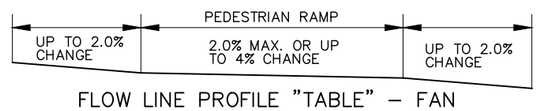

FLOW LINE PROFILE "TABLE" – FAN

FLOW LINE PROFILE RAISE – TWIN PERPENDICULARS

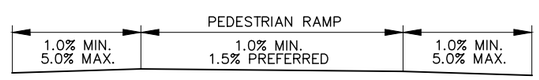

FLOW LINE PROFILE RAISE – FAN

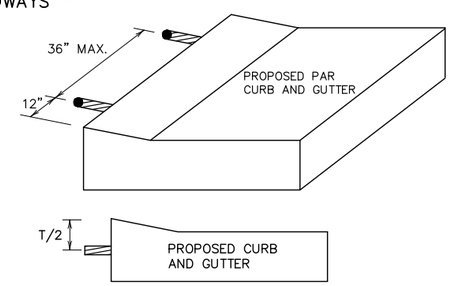

OPTIONAL CURB LINE REINFORCEMENT DETAILS ②④

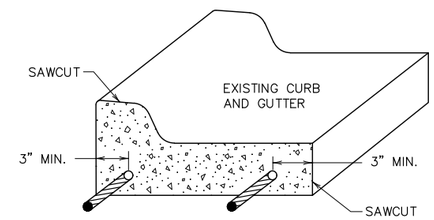

FOR USE ON CURB RAMP RETROFITS

CURB AND GUTTER REINFORCEMENT ③

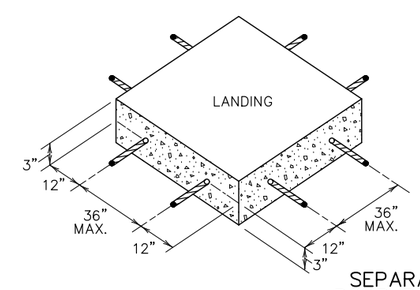

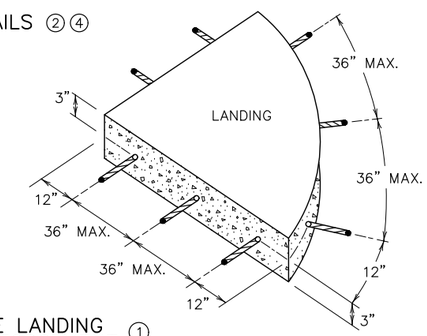

SEPARATE LANDING POUR REINFORCEMENT ①

"TABLING" OF CROSSWALKS MEANS MAINTAINING LESS THAN 2% CROSS SLOPE WITHIN A CROSSWALK, IS REQUIRED WHEN A ROADWAY IS IN A STOP OR YIELD CONDITION AND THE PROJECT SCOPE ALLOWS.

RECONSTRUCTION PROJECTS: ON FULL PAVEMENT REPLACEMENT PROJECTS "TABLING" OF ENTIRE CROSSWALK SHALL OCCUR WHEN FEASIBLE.

MILL & OVERLAY PROJECTS: "TABLING" OF FLOW LINES, IN FRONT OF THE PEDESTRIAN RAMP, IS REQUIRED WHEN THE EXISTING FLOW LINE IS GREATER THAN 2%. WARPING OF THE BITUMINOUS PAVEMENT CAN NOT EXTEND INTO THE THROUGH LANE. TABLE THE FLOW LINE TO 2% OR AS MUCH AS POSSIBLE WHILE ADHERING TO THE FOLLOWING CRITERIA;

1) 1.0% MIN. CROSS-SLOPE OF THE ROAD
2) 5.0% MAX. CROSS-SLOPE OF THE ROAD
3) "TABLE" FLOW LINE UP TO 4% CHANGE FROM EXISTING SLOPE IN FRONT OF PEDESTRIAN RAMP
4) UP TO 2% CHANGE IN FLOW LINE FROM EXISTING SLOPE BEYOND THE PEDESTRIAN CURB RAMP

STAND-ALONE ADA RETROFITS: FOLLOW MILL & OVERLAY CRITERIA ABOVE HOWEVER ALL PAVEMENT WARPING IS DONE WITH BITUMINOUS PATCHING ON BITUMINOUS ROADWAYS AND FULL-DEPTH APRON REPLACEMENT ON CONCRETE ROADWAYS.

RAISING OF CURB LINES SHOULD OCCUR IN VERTICALLY CONSTRAINED AREAS. RAISE THE CURB LINES ENOUGH TO ALLOW COMPLIANT RAMPS OR AS MUCH AS POSSIBLE WHILE ADHERING TO THE FOLLOWING CRITERIA;

1) 1.0% MIN. AND 5.0% MAXIMUM CROSS-SLOPE OF THE ROAD
2) 1.0% MIN. FLOW LINE (ON EITHER SIDE OF PEDESTRIAN RAMP) TO MAINTAIN POSITIVE DRAINAGE
3) 5.0% RECOMMENDED MAX. FLOW LINE
4) LONGITUDINAL THROUGH LANE ROADWAY TAPERS SHOULD BE 1" VERTICAL PER 15' HORIZONTAL

NOTES:

① TO ENSURE RAMPS AND LANDINGS ARE PROPERLY CONSTRUCTED, ALL INITIAL LANDINGS AT A TOP OF A RAMPED SURFACE (RUNNING SLOPE GREATER THAN 2%) SHALL BE FORMED AND PLACED SEPARATELY IN AN INDEPENDENT CONCRETE POUR. FOLLOW SIDEWALK REINFORCEMENT DETAILS ON THIS SHEET FOR ALL SEPARATELY POURED INITIAL LANDINGS.

② DRILL AND GROUT NO. 4 12" LONG REINFORCEMENT BARS AT 36" MAXIMUM CENTER TO CENTER (EPOXY COATED). BARS TO BE ADJUSTED TO MATCH RAMP GRADE.

③ DRILL AND GROUT 2 – NO. 4 X 12" LONG REINFORCEMENT BARS (EPOXY COATED). REINFORCEMENT REQUIRED FOR ALL CONSTRUCTION JOINTS WITHIN RADIUS.

④ THIS OPTIONAL CURB LINE REINFORCEMENT DETAIL SHOULD ONLY BE USED ON BITUMINOUS ROADWAYS WHEN SPECIFIED IN THE PLAN.

⑤ 1/2 IN. PREFORMED JOINT FILLER MATERIAL PER MNDOT SPEC. 3702.

REVISION:

APPROVED: JANUARY 23, 2017

OPERATIONS ENGINEER

MINNESOTA DEPARTMENT OF TRANSPORTATION

STANDARD PLAN 5-297.250 | 6 OF 6

APPROVED: 1-23-2017
REVISED:

STATE DESIGN ENGINEER

PEDESTRIAN CURB RAMP DETAILS

RAMSEY COUNTY
WHITE BEAR AVENUE (CSAH 65) & GERVAIS AVENUE IMPROVEMENTS

SHEET NO. 17 OF 51 SHEETS

1:28:18 PM
4/23/2020
c:\pw_working\projectwise\aliant\d0135718\cd200052-spn.dwg

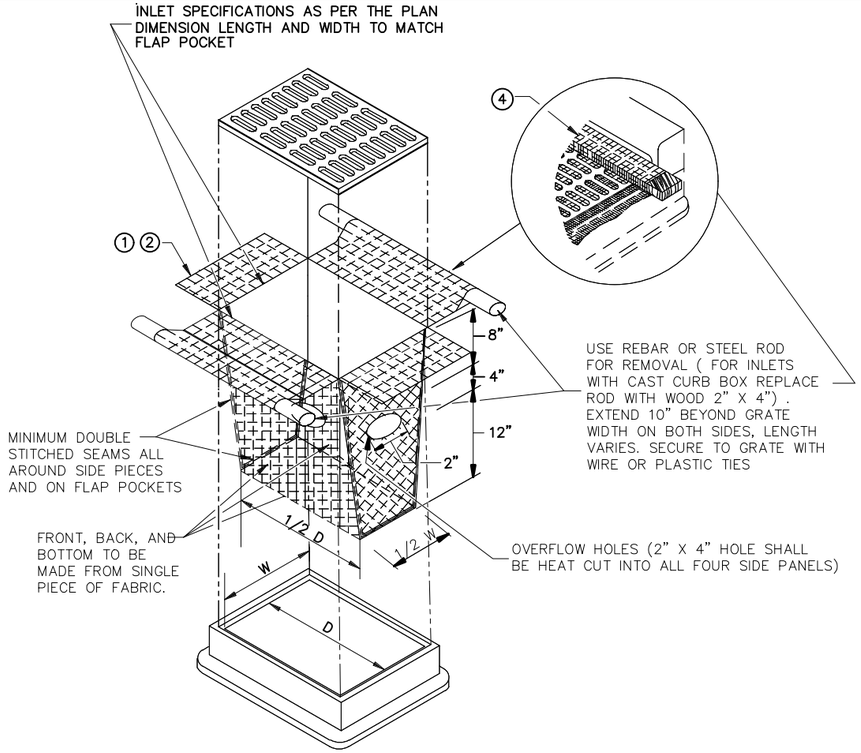

FILTER BAG INSERT ③

(CAN BE INSTALLED IN ANY INLET TYPE WITH OR WITHOUT A CURB BOX)

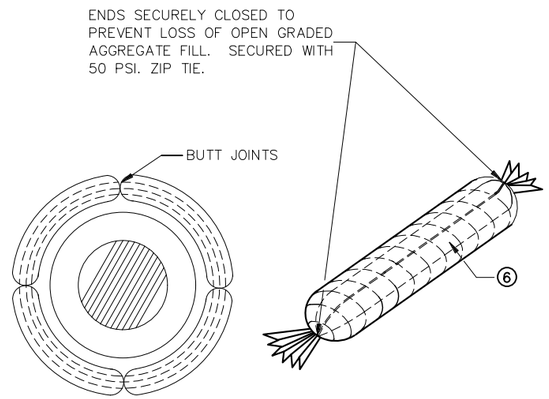

ROCK LOG/COMPOST LOG

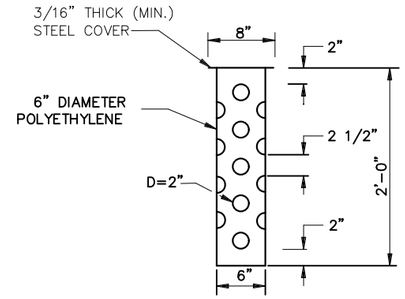

TUBE RISER

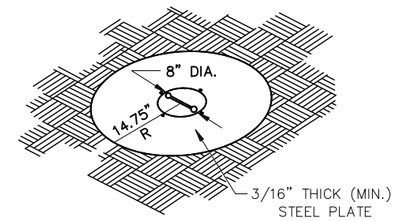

PERSPECTIVE VIEW

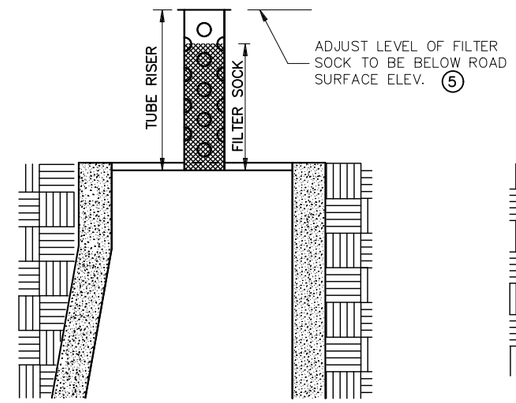

SECTION (UP POSITION)

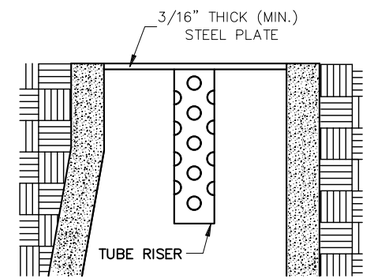

SECTION (DOWN POSITION)

POP-UP HEAD

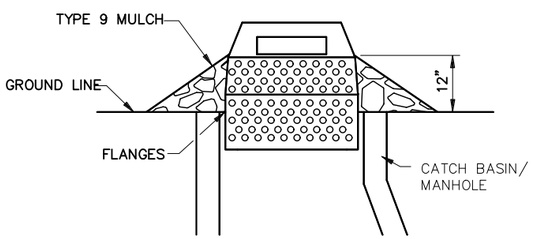

SEDIMENT CONTROL INLET HAT

NOTE:
THE SEDIMENT CONTROL BARRIER SHALL BE A METAL OR PLASTIC/POLYETHYLENE RISER SIZED TO FIT INSIDE THE CATCH BASIN/MANHOLE; HAVE PERFORATIONS TO ALLOW FOR WATER INFILTRATION; HAVE AN OVERFLOW OPENING, FLANGES AND A LID/COVER.

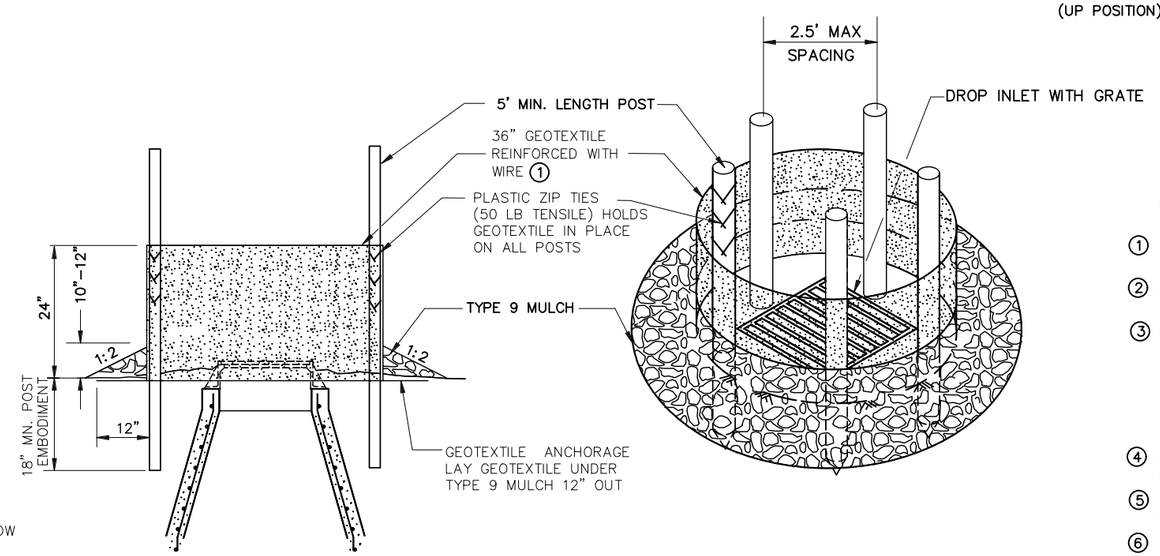

SILT FENCE RING AND ROCK FILTER BERM

USE WHERE INLET DRAINS IN AN AREA WITH SLOPES AT 1:3 or LESS

NOTES:

SEE SPECS. 2573, 3137, & 3886.

DEVICES MUST BE ADJUSTED ACCORDINGLY AS TO NOT CAUSE FLOODING ON ROADWAY THAT WOULD IMPEED TRAFFIC FLOW.

① ALL GEOTEXTILE USED FOR INLET PROTECTION SHALL BE MONOFILAMENT IN BOTH DIRECTIONS, MEETING SPEC. 3886.

② FINISHED SIZE, INCLUDING POCKETS WHERE REQUIRED SHALL EXTEND A MINIMUM OF 10 INCHES AROUND THE PERIMETER TO FACILITATE MAINTENANCE OR REMOVAL.

③ INSTALLATION NOTES:
DO NOT PLACE FILTER BAG INSERT IN INLETS SHALLOWER THAN 30 INCHES, MEASURED FROM THE BOTTOM OF THE INLET TO THE TOP OF THE GRATE. THE PLACED BAG SHALL HAVE A MINIMUM SIDE CLEARANCE OF 3 INCHES BETWEEN THE INLET WALLS AND THE BAG, MEASURED AT THE BOTTOM OF THE OVERFLOW HOLES. WHERE NECESSARY THE CONTRACTOR SHALL CLINCH THE BAG, USING PLASTIC ZIP TIES, TO ACHIEVE THE 3 INCH SIDE CLEARANCE.

④ FLAP POCKETS SHALL BE LARGE ENOUGH TO ACCEPT WOOD 2 INCH X 4 INCH OR USE A ROCK SOCK OR SAND BAGS IN PLACE OF THE FLAP POCKETS.

⑤ **SOCK HEIGHT MUST NOT BE SO HIGH AS TO SLOW DOWN WATER FILTRATION TO CAUSE FLOODING OF THE ROADWAY.**

⑥ GEOTEXTILE SOCK BETWEEN 4–10 FEET LONG AND 4–6 INCH DIAMETER. SEAM TO BE JOINED BY TWO ROWS OF STITCHING WITH A PLASTIC MESH BACKING OR PROVIDE A HEAT BONDED SEAM (OR APPROVED EQUIVALENT). FILL ROCK LOG WITH OPEN GRADED AGGREGATE CONSISTING OF SOUND DURABLE PARTICLES OF COARSE AGGREGATE CONFORMING TO SPEC. 3137 TABLE 3137–1; CA–3 GRADATION.

REVISION:

APPROVED: 2–28–2017

CHIEF ENVIRONMENTAL OFFICER

MINNESOTA DEPARTMENT OF TRANSPORTATION

STANDARD PLAN 5-297.405 | 4 OF 8

APPROVED: 2–28–2017
REVISED:

STATE DESIGN ENGINEER

TEMPORARY SEDIMENT CONTROL
STORM DRAIN INLET PROTECTION

RAMSEY COUNTY
WHITE BEAR AVENUE (CSAH 65) & GERVAIS AVENUE IMPROVEMENTS

SHEET NO. 18 OF 51 SHEETS

1:28:21 PM
4/23/2020
c:\pw_working\projectwise\alliant\d0135718\cd200052-spn.dwg

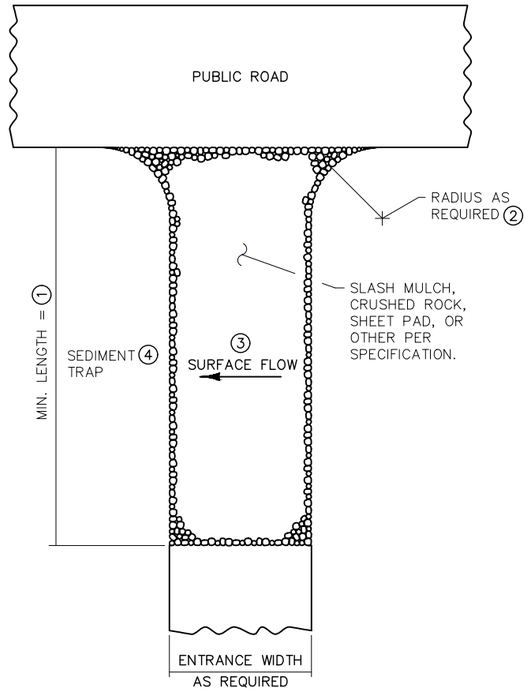

SLASH MULCH, CRUSHED ROCK, OR SHEET PAD CONSTRUCTION EXIT ⑤⑦

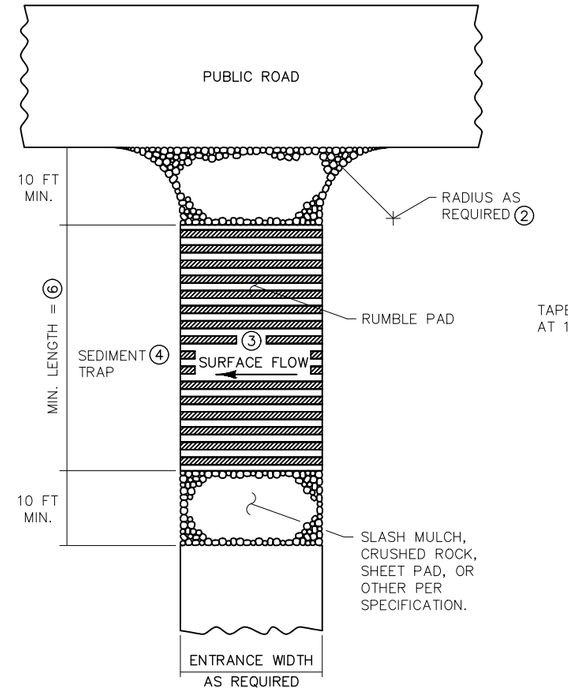

RUMBLE PAD CONSTRUCTION EXIT ⑤⑦

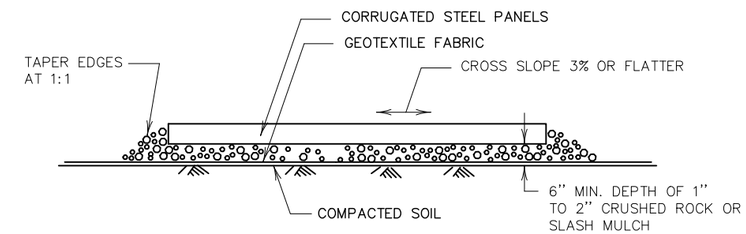

RUMBLE PAD

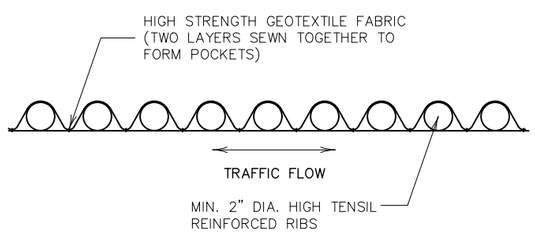

SHEET PAD

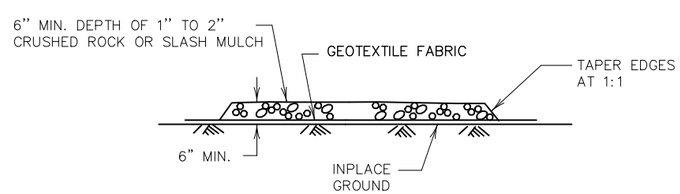

SLASH MULCH OR CRUSHED ROCK

NOTES:

SEE SPECS. 2573 & 3882.

① MINIMUM LENGTH SHALL BE THE GREATER OF 50 FEET OR A LENGTH SUFFICIENT TO ALLOW A MINIMUM OF 5 TIRE ROTATIONS ON THE PROVIDED PAD. MINIMUM LENGTH SHALL BE CALCULATED USING THE LARGEST TIRE WHICH WILL BE USED IN TYPICAL OPERATIONS.

② PROVIDE RADIUS OR WIDEN PAD SUFFICIENTLY TO PREVENT VEHICLE TIRES FROM TRACKING OFF OF PAD WHEN LEAVING SITE.

③ IF RUNOFF FROM DISTURBED AREAS FLOWS TOWARD CONSTRUCTION EXITS, PREVENT RUNOFF FROM DRAINING DIRECTLY TO PUBLIC ROAD OVER CONSTRUCTION EXIT BY CROWNING THE EXIT OR SLOPING TO ONE SIDE. IF SURFACE GRADING IS INSUFFICIENT, PROVIDE OTHER MEANS OF INTERCEPTING RUNOFF.

④ IF RUNOFF FROM CONSTRUCTION EXITS WILL DRAIN OFF OF PROJECT SITE, PROVIDE SEDIMENT TRAP WITH STABILIZED OVERFLOW.

⑤ IF A TIRE WASH OFF IS REQUIRED THE CONSTRUCTION EXITS SHALL BE GRADED TO DRAIN THE WASH WATER TO A SEDIMENT TRAP.

⑥ MINIMUM LENGTH OF RUMBLE PAD SHALL BE 20 FEET, OR AS REQUIRED TO REMOVE SEDIMENT FROM TIRES. IF SIGNIFICANT SEDIMENT IS TRACKED FROM THE SITE, THE RUMBLE PAD SHALL BE LENGTHENED OR THE DESIGN MODIFIED TO PROVIDE ADDITIONAL VIBRATION. WASH-OFF LENGTH SHALL BE AS REQUIRED TO EFFECTIVELY REMOVE CONSTRUCTION SEDIMENT FROM VEHICLE TIRES.

⑦ MAINTENANCE OF CONSTRUCTION EXITS SHALL OCCUR WHEN THE EFFECTIVENESS OF SEDIMENT REMOVAL HAS BEEN REDUCED. MAINTENANCE SHALL CONSIST OF REMOVING SEDIMENT AND CLEANING THE MATERIALS OR PLACING ADDITIONAL MATERIAL (SLASH MULCH OR CRUSHED ROCK) OVER SEDIMENT FILLED MATERIAL TO RESTORE EFFECTIVENESS.

REVISION:

APPROVED: 2-28-2017

CHIEF ENVIRONMENTAL OFFICER

MINNESOTA DEPARTMENT OF TRANSPORTATION

STANDARD PLAN 5-297.405 | 5 OF 8

APPROVED: 2-28-2017
REVISED:

STATE DESIGN ENGINEER

TEMPORARY SEDIMENT CONTROL
STABILIZED CONSTRUCTION EXIT

RAMSEY COUNTY
WHITE BEAR AVENUE (CSAH 65) & GERVAIS AVENUE IMPROVEMENTS

SHEET NO. 19 OF 51 SHEETS

1:28:22 PM
4/23/2020
c:\pw_working\projectwise\alliant\d0135718\cd2000052-spn.dwg

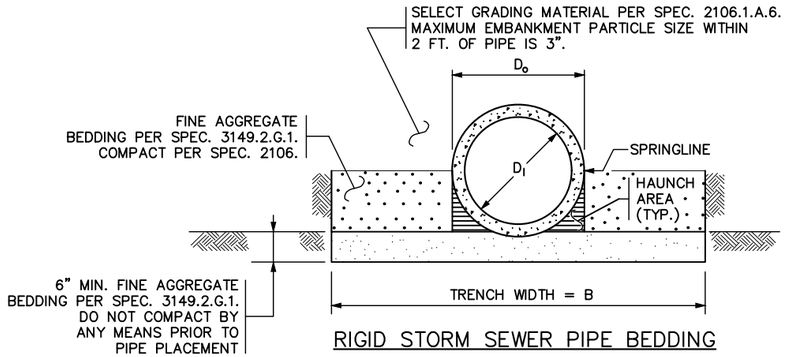

RIGID STORM SEWER PIPE BEDDING

TRENCH BASE WIDTH ① ②	
PIPE DIA. D_I OR S_I	TRENCH WIDTH B
< 42"	D_o + 24"
42" TO 54"	1.5 x D_o
> 54"	D_o + 36"

PLASTIC PIPE
WITH H >10 FT. ① ②

PIPE DIA.	TRENCH WIDTH (FEET)
12"	5'–2"
15"	5'–6"
18"	5'–9"
24"	6'–6"
30"	8'–0"
36"	9'–6"
42"	11'–0"
48"	12'–6"

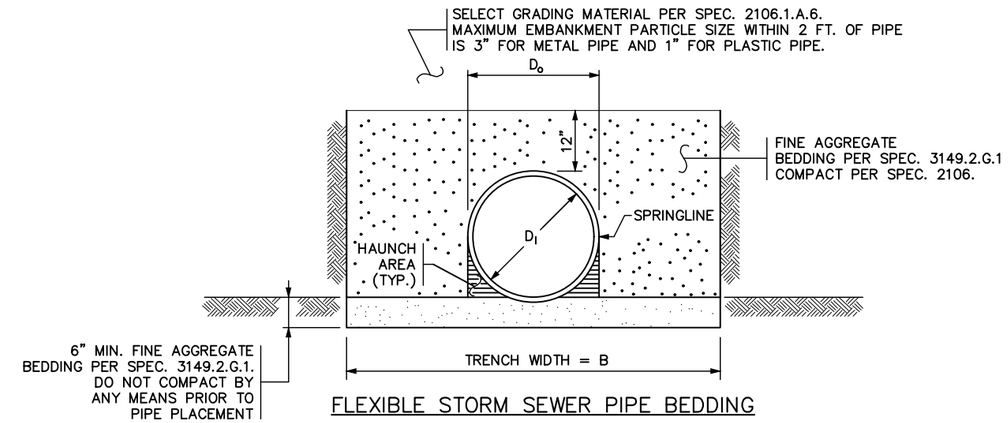

FLEXIBLE STORM SEWER PIPE BEDDING

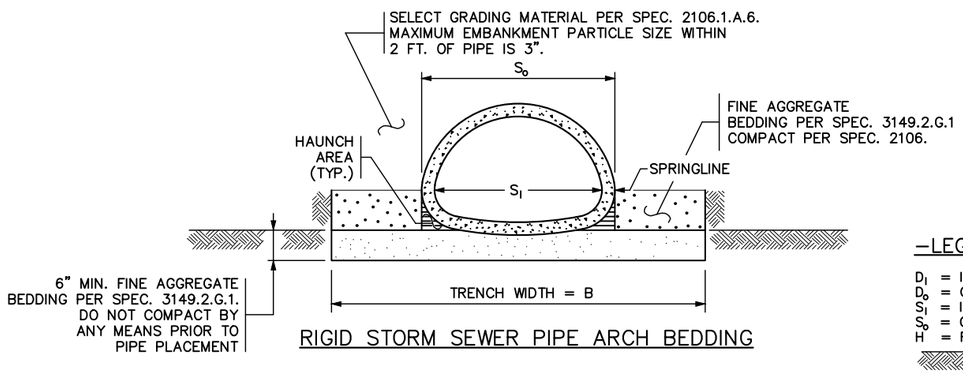

RIGID STORM SEWER PIPE ARCH BEDDING

–LEGEND–

D_I = INSIDE DIAMETER OF ROUND PIPE (INCHES).
D_o = OUTSIDE DIAMETER OF ROUND PIPE (INCHES).
S_I = INSIDE SPAN OF PIPE–ARCH (INCHES).
S_o = OUTSIDE SPAN OF PIPE–ARCH (INCHES).
H = FILL COVER HEIGHT OVER PIPE (FEET).
= UNDISTURBED SOIL
= COMPACTED BEDDING
= LOOSE BEDDING, COMPACTED AFTER PIPE PLACEMENT

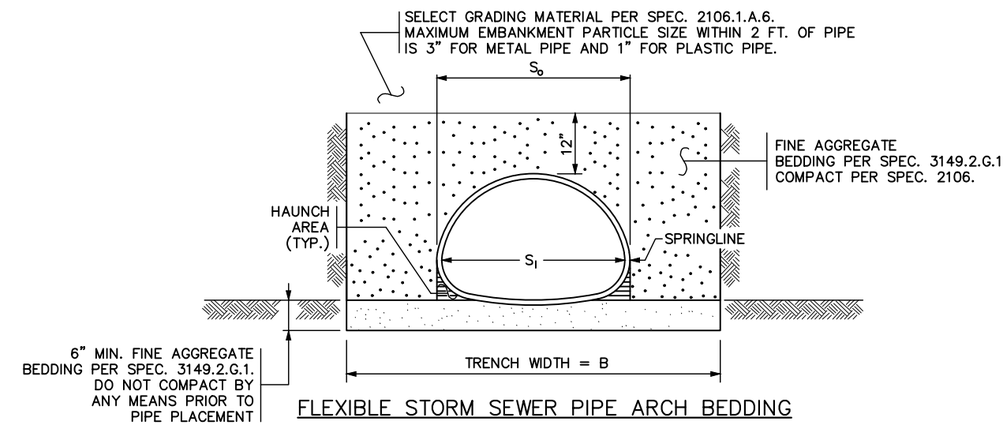

FLEXIBLE STORM SEWER PIPE ARCH BEDDING

CONSTRUCTION SEQUENCE

1. LOOSELY PLACE 6" OF FINE AGGREGATE BEDDING MATERIAL TO GRADE. DO NOT COMPACT PRIOR TO PIPE PLACEMENT.
2. FOR PIPES WITH BELL, REMOVE MATERIAL IN BELL AREA PRIOR TO PLACEMENT.
3. FURNISH AND INSTALL PIPE TO GRADE.
4. AFTER PLACEMENT OF THE PIPE, PLACE ADDITIONAL FINE AGGREGATE BEDDING AND COMPACT THE FULL LENGTH ON BOTH SIDES OF THE PIPE UNDERNEATH THE HAUNCH AREA BY FIRST SHOVEL SLICING (MANUALLY SHOVE THE BLADE END OF SHOVEL AT AN ANGLE DOWN THE ENTIRE LENGTH OF HAUNCH UNDER THE PIPE). THEN COMPACT THE HAUNCH AT AN ANGLE USING A POWERED MECHANICAL OR PNEUMATIC DEVICE (I.E. POLE TAMPER, JUMPING JACK, OR SIMILAR).
5. COMPACT THE REMAINING MATERIAL OUTSIDE THE HAUNCH AREA TO THE REQUIREMENTS OF SPEC. 2106 ENSURING THAT THE ENTIRE LENGTH OF PIPE IS SUPPORTED UNIFORMLY BY BEDDING.
6. PLACE AND COMPACT BACKFILL EVENLY AND SIMULTANEOUSLY IN 6" LIFTS ON EACH SIDE OF THE PIPE UP TO THE SPRINGLINE FOR RIGID PIPE AND 12" ABOVE THE TOP OF THE PIPE FOR FLEXIBLE PIPE WHEN COMPACTED.
7. COMPLETE REMAINING BACKFILL.

NOTES

EXCAVATE & CONSTRUCT ALL TRENCHES AND SLOPES PER OSHA REQUIREMENTS.

PIPE SIZE IS BASED ON THE NOMINAL INSIDE DIAMETER OR SPAN.

PROTECT ALL PIPE DURING CONSTRUCTION PER SPEC. 2503.

WHEN RIPRAP IS REQUIRED AT THE APRON END, SEE STANDARD PLATE OR PLAN FOR RIPRAP INSTALLATION AND QUANTITIES. FOR APRONS WITHOUT RIPRAP PLACE 6" MIN. FINE AGGREGATE BEDDING UNDER APRONS. USE A TRENCH WIDTH EQUAL TO THE PIPE TRENCH WIDTH.

FINE AGGREGATE BEDDING INCLUDING THE COST OF EXCAVATION, PLACEMENT AND COMPACTION IS INCLUDED IN THE CONTRACT UNIT PRICE OF THE RELEVANT STORM SEWER PAY ITEM.

EXCAVATION AND BACKFILL WITH SELECT GRADING MATERIAL ARE NOT TABULATED SEPARATELY BUT ARE INCLUDED IN THE CONTRACT UNIT PRICE OF THE RELEVANT STORM SEWER PAY ITEM.

RIGID PIPE INCLUDES CONCRETE. FLEXIBLE PIPE INCLUDES METAL, AND PLASTIC MATERIALS SUCH AS CORRUGATED POLYPROPYLENE (PP), CORRUGATED POLYETHYLENE (CP) AND POLYVINYL CHLORIDE (PVC).

① MODIFY TRENCH WIDTH & SLOPE AS NECESSARY TO COMPLY WITH OSHA REQUIREMENTS.

② USE PLASTIC PIPE TABLE FOR TRENCH WIDTHS WHEN FILL HEIGHT IS GREATER THAN 10 FT.

REVISION:

APPROVED: JANUARY 18, 2019
Kim Weston
STATE BRIDGE ENGINEER

MINNESOTA DEPARTMENT OF TRANSPORTATION

STANDARD PLAN 5-297.442 | 1 OF 1

APPROVED: 01–18–2019
REVISED:
Tom Sah
STATE DESIGN ENGINEER

STANDARD STORM SEWER BEDDING
FOR RIGID AND FLEXIBLE PIPE

RAMSEY COUNTY
WHITE BEAR AVENUE (CSAH 65) & GERVAIS AVENUE IMPROVEMENTS

SHEET NO. 20 OF 51 SHEETS

1:28:23 PM
4/23/2020
c:\pw_working\projectwise\ulliont\d0135718\cd200052–spn.dwg

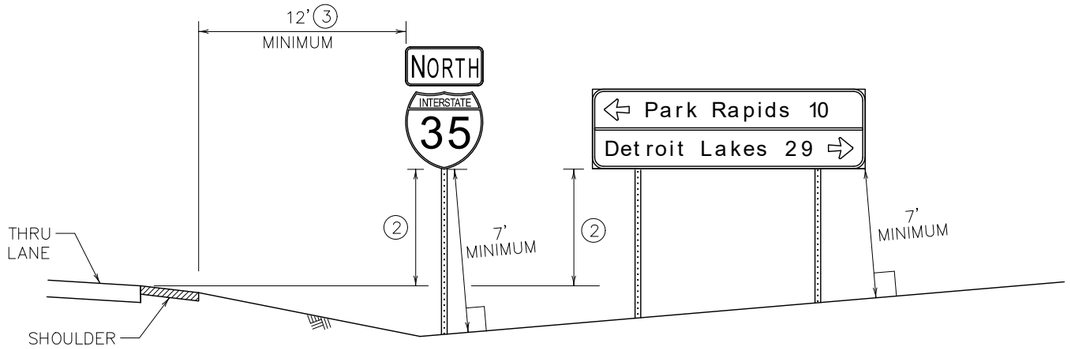

RURAL LOCATIONS

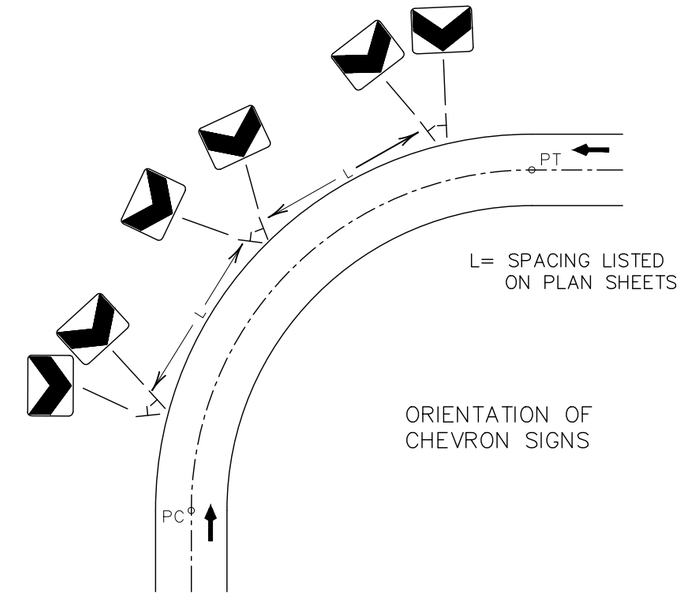

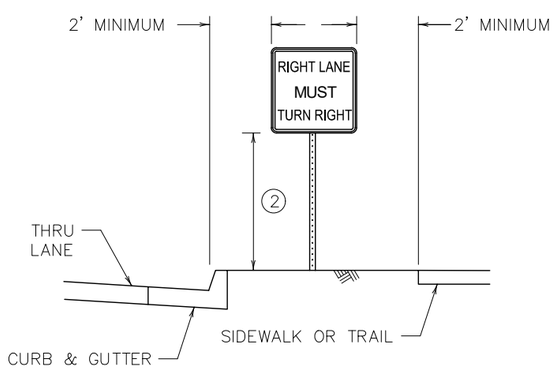

URBAN LOCATIONS

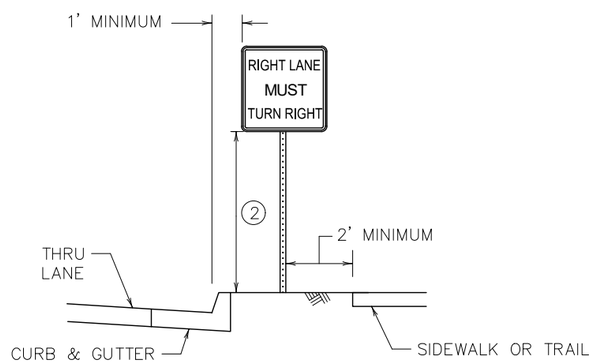

NARROW URBAN LOCATIONS (1)

NOTES:

URBAN LOCATIONS ARE PAVEMENT SECTIONS WITH CURB AND GUTTER.

RURAL LOCATIONS ARE PAVEMENT SECTIONS WITHOUT CURB AND GUTTER.

SIGNS SHALL BE PLACED AND ORIENTED APPROXIMATELY AS SHOWN IN THE PLAN, AT RIGHT ANGLES TO THE DIRECTION OF, AND FACING, THE TRAFFIC THEY ARE INTENDED TO SERVE, UNLESS OTHERWISE SPECIFIED. TO AVOID SPECULAR GLARE, TURN SIGNS APPROXIMATELY THREE DEGREES AWAY FROM APPROACHING TRAFFIC.

IF A SIGN NEEDS TO BE REPOSITIONED FROM THE PROPOSED PLAN LOCATION IN ORDER TO AVOID CONFLICTS WITH UTILITIES OR OBSTACLES, CONTACT THE PROJECT ENGINEER.

SIGN FACES SHALL BE MOUNTED PLUMB.

LATERAL CLEARANCES GIVEN APPLY TO RIGHT AND/OR LEFT SIDE INSTALLATION.

SIGNS SHALL NOT BE ERECTED OR CONSTRUCTED SO AS TO CAUSE ANY PORTION OF THE SIGN TO BE WITHIN 8.5' OF THE CENTERLINE OF A RAILROAD TRACK.

SIGNS SHALL BE PLACED SUCH THAT OBSTACLES DO NOT BLOCK THEM FROM BEING VIEWED BY THE APPROACHING TRAFFIC.

SIGNS SHALL BE PLACED A MINIMUM OF 10' FROM THE NEAREST OBSTACLE. OBSTACLES MAY INCLUDE, BUT ARE NOT LIMITED TO, LIGHT POLES, TREES, SIGNS, AND BUILDINGS. SIGNS MAY BE PLACED CLOSER TO SIGNS IN TIGHT AREAS, BUT NO MORE THAN TWO POSTS IN A 7' DIAMETER CIRCLE.

(1) TO BE USED ONLY WHEN BOULEVARD IS TOO NARROW TO OBTAIN ADEQUATE URBAN LOCATION SIGN OFFSETS.

(2) ALL SIGN MOUNTING HEIGHTS ARE MEASURED VERTICALLY FROM THE BOTTOM OF THE SIGN TO THE TOP OF THE CURB, OR IN ABSENCE OF CURB, TO THE NEAR EDGE OF THE THRU-LANE PAVEMENT. SEE SIGN TABULATIONS.

(3) MINIMUM MAY BE REDUCED TO 6' FROM SHOULDER AND 12' FROM THRU LANE IF SITE CONDITIONS PROHIBIT A 12' OFFSET FROM SHOULDER. IF ADEQUATE RIGHT OF WAY IS NOT AVAILABLE TO PLACE SIGN AT REDUCED MINIMUM, SIGN SHALL BE PLACED SUCH THAT PANEL EDGE IS 1' FROM RIGHT OF WAY AND NEAR PANEL EDGE IS AT LEAST 2' FROM EDGE OF SHOULDER.

REVISION:

APPROVED: OCTOBER 16, 2019

BRIAN SOBENSON
STATE TRAFFIC ENGINEER

MINNESOTA
DEPARTMENT OF TRANSPORTATION

STANDARD PLAN 5-297.701 | 1 OF 1

APPROVED: 10-16-2019
REVISED:

PETER A. HARFF
STATE DESIGN ENGINEER

STANDARD SIGN PLACEMENT
TYPE C & D

RAMSEY COUNTY
WHITE BEAR AVENUE (CSAH 65) & GERVAIS AVENUE IMPROVEMENTS

SHEET NO. 21 OF 51 SHEETS

1:28:24 PM
4/23/2020
c:\pw_working\projectwise\alliant\d0135718\cd200052-spn.dwg

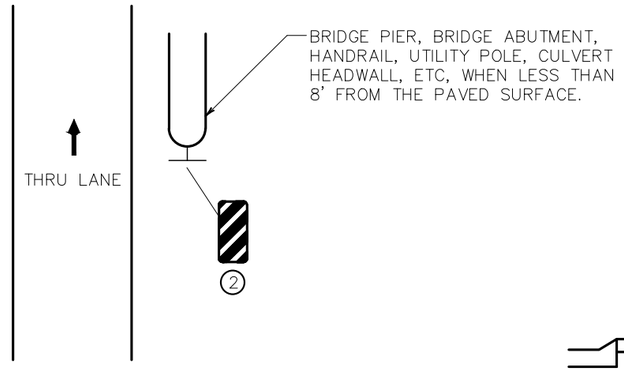

OBSTRUCTION
TYPE 3 OBJECT MARKER

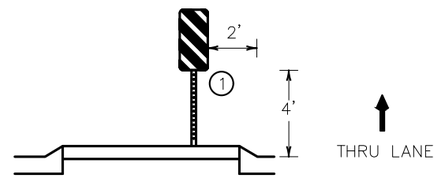

RAISED ISLAND
TYPE 3 OBJECT MARKER

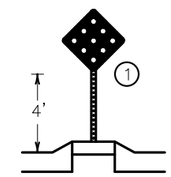

RAISED ISLAND
TYPE 1 OBJECT MARKER

MARKER TYPICAL PLACEMENT

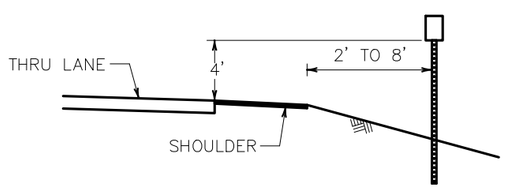

RURAL SECTION

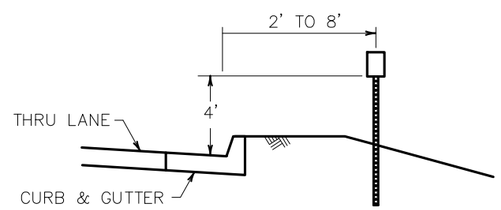

URBAN SECTION

DELINEATOR TYPICAL PLACEMENT

NOTES:

1. MARKER SHOULD BE PLACED AS CLOSE TO THE BEGINNING OF MEDIAN AS POSSIBLE.
2. THE EDGE OF THE OBJECT MARKER THAT IS CLOSEST TO THE ROAD USER SHALL BE PLACED IN LINE WITH THE CLOSEST EDGE OF THE OBSTRUCTION. STRIPES SHALL BE ANGLED DOWNWARD TOWARDS THE SIDE TRAFFIC IS TO PASS THE OBSTRUCTION.

REVISION:

APPROVED: OCTOBER 16, 2019

BRIAN SOBENSON
STATE TRAFFIC ENGINEER

MINNESOTA DEPARTMENT OF TRANSPORTATION

STANDARD PLAN 5-297.702 | 1 OF 1

APPROVED: 10-16-2019
REVISED:

PETER A. HARFF
STATE DESIGN ENGINEER

DELINEATOR AND MARKER PLACEMENT

RAMSEY COUNTY
WHITE BEAR AVENUE (CSAH 65) & GERVAIS AVENUE IMPROVEMENTS

SHEET NO. 22 OF 51 SHEETS

1:28:24 PM
4/23/2020
c:\pw_working\projectwise\alliant\d0135718\cd200052-spn.dwg

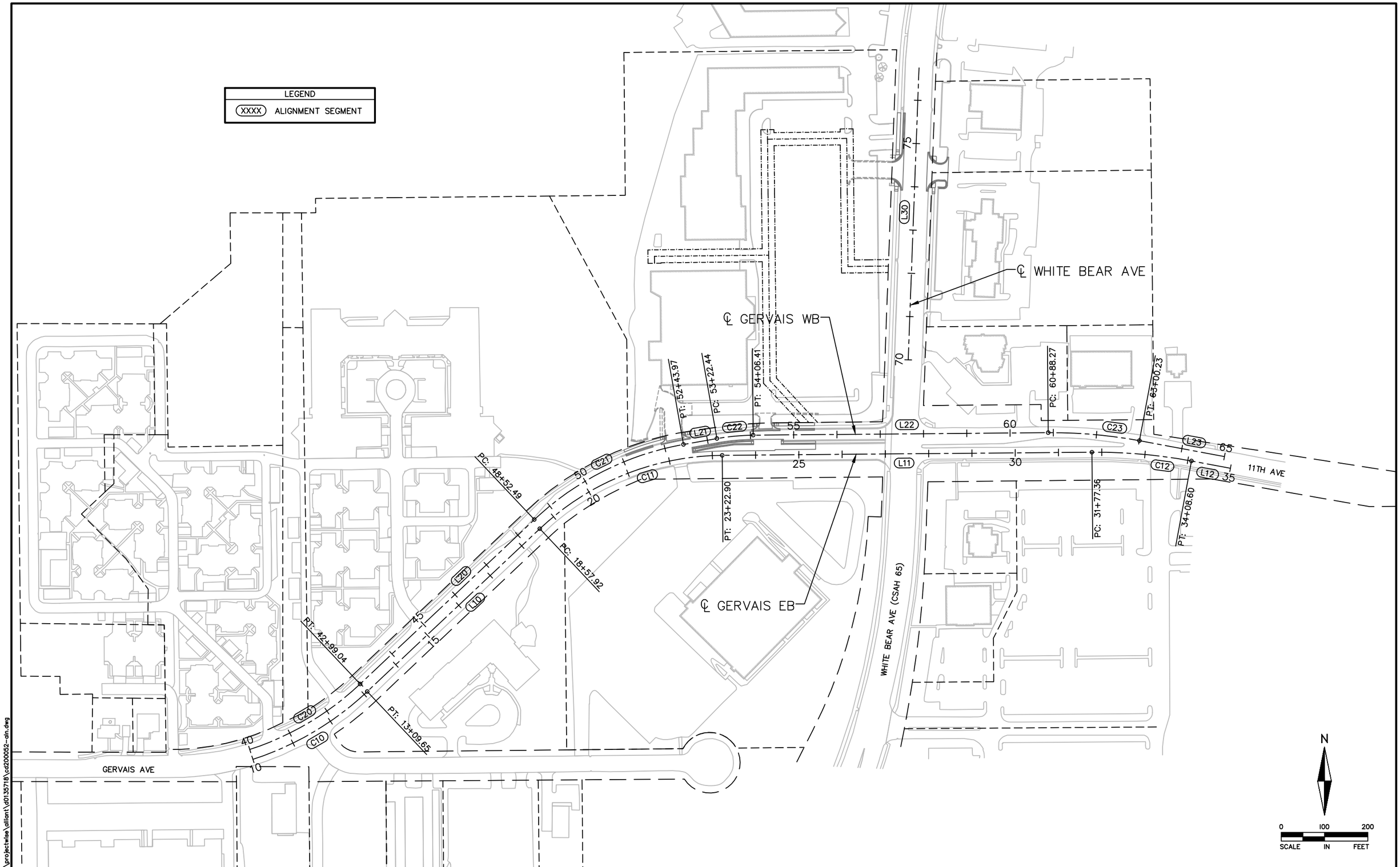

NO	DATE	DWN	CKD	REVISIONS

ALLIANT

I HEREBY CERTIFY THAT THIS SHEET WAS PREPARED BY ME OR UNDER MY DIRECT SUPERVISION AND THAT I AM A DULY LICENSED PROFESSIONAL ENGINEER UNDER THE LAWS OF THE STATE OF MINNESOTA.

PRINT NAME: SEAN M. JOHNSTON

SIGNATURE:

DATE XX/XX/2020 LICENSE # 52701

ALIGNMENT PLAN

GERVAIS AVENUE & WHITE BEAR AVENUE

RAMSEY COUNTY
WHITE BEAR AVENUE (CSAH 65) & GERVAIS AVENUE IMPROVEMENTS

SHEET NO. 23 OF 51 SHEETS

1:28:29 PM
4/23/2020
c:\pw_working\projectwise\alliant\d0135718\cd200052-aln.dwg

ALIGNMENT DATA
GERVAIS EB

SEGMENT NUMBER	BEGINNING STATION	ENDING STATION	PI STATION	NOTES	DELTA	DEGREE	RADIUS (FT)	TANGENT (FT)	LENGTH (FT)	BEGINNING COORDINATES NORTHING	BEGINNING COORDINATES EASTING	ENDING COORDINATES NORTHING	ENDING COORDINATES EASTING	AZIMUTH
C10	10+00.00	13+09.65	11+57.40		25°20'44"	8°11'06.40"	700.00	157.40	309.65	181346.99	592492.39	181503.62	592756.59	72°00'39" 46°39'56"
L10	13+09.65	18+57.92							548.27	181503.62	592756.59	181879.87	593155.38	46°39'56"
C11	18+57.92	23+22.90	21+01.89		42°51'07"	9°12'57.57"	621.70	243.97	464.98	181879.87	593155.38	182049.35	593576.79	46°39'56" 89°31'03"
L11	23+22.90	31+77.36							854.46	182049.35	593576.79	182056.55	594431.22	89°31'03"
C12	31+77.36	34+08.60	32+93.34		11°02'27"	4°46'28.73"	1200.00	115.98	231.24	182056.55	594431.22	182036.27	594661.21	89°31'03" 100°33'30"
L12	34+08.60	35+00.00							91.40	182036.27	594661.21	182019.53	594751.06	100°33'30"

ALIGNMENT DATA
GERVAIS WB

SEGMENT NUMBER	BEGINNING STATION	ENDING STATION	PI STATION	NOTES	DELTA	DEGREE	RADIUS (FT)	TANGENT (FT)	LENGTH (FT)	BEGINNING COORDINATES NORTHING	BEGINNING COORDINATES EASTING	ENDING COORDINATES NORTHING	ENDING COORDINATES EASTING	AZIMUTH
C20	40+00.00	42+99.04	41+52.00		25°20'44"	8°28'32.55"	676.00	152.00	299.04	181369.82	592484.98	181521.07	592740.12	72°00'39" 46°39'56"
L20	42+99.04	48+52.49							553.46	181521.07	592740.12	181900.89	593142.68	46°39'56"
C21	48+52.49	52+43.97	50+53.91		33°13'47"	8°29'17.75"	675.00	201.42	391.48	181900.89	593142.68	182074.45	593487.47	46°39'56" 79°53'43"
L21	52+43.97	53+22.44							78.47	182074.45	593487.47	182088.22	593564.72	79°53'43"
C22	53+22.44	54+06.41	53+64.52		9°37'20"	11°27'32.96"	500.00	42.08	83.97	182088.22	593564.72	182095.96	593648.24	79°53'43" 89°31'03"
L22	54+06.41	60+88.27							681.86	182095.96	593648.24	182101.70	594330.07	89°31'03"
C23	60+88.27	63+00.23	61+94.58		11°02'27"	5°12'31.35"	1100.00	106.31	211.97	182101.70	594330.07	182083.11	594540.89	89°31'03" 100°33'30"
L23	63+00.23	65+00.00							199.77	182083.11	594540.89	182046.51	594737.28	100°33'30"

ALIGNMENT DATA
WHITE BEAR AVE

SEGMENT NUMBER	BEGINNING STATION	ENDING STATION	PI STATION	NOTES	DELTA	DEGREE	RADIUS (FT)	TANGENT (FT)	LENGTH (FT)	BEGINNING COORDINATES NORTHING	BEGINNING COORDINATES EASTING	ENDING COORDINATES NORTHING	ENDING COORDINATES EASTING	AZIMUTH
L30	70+00.00	76+75.00							675.00	182270.03	594006.50	182944.57	594031.50	2°07'20"

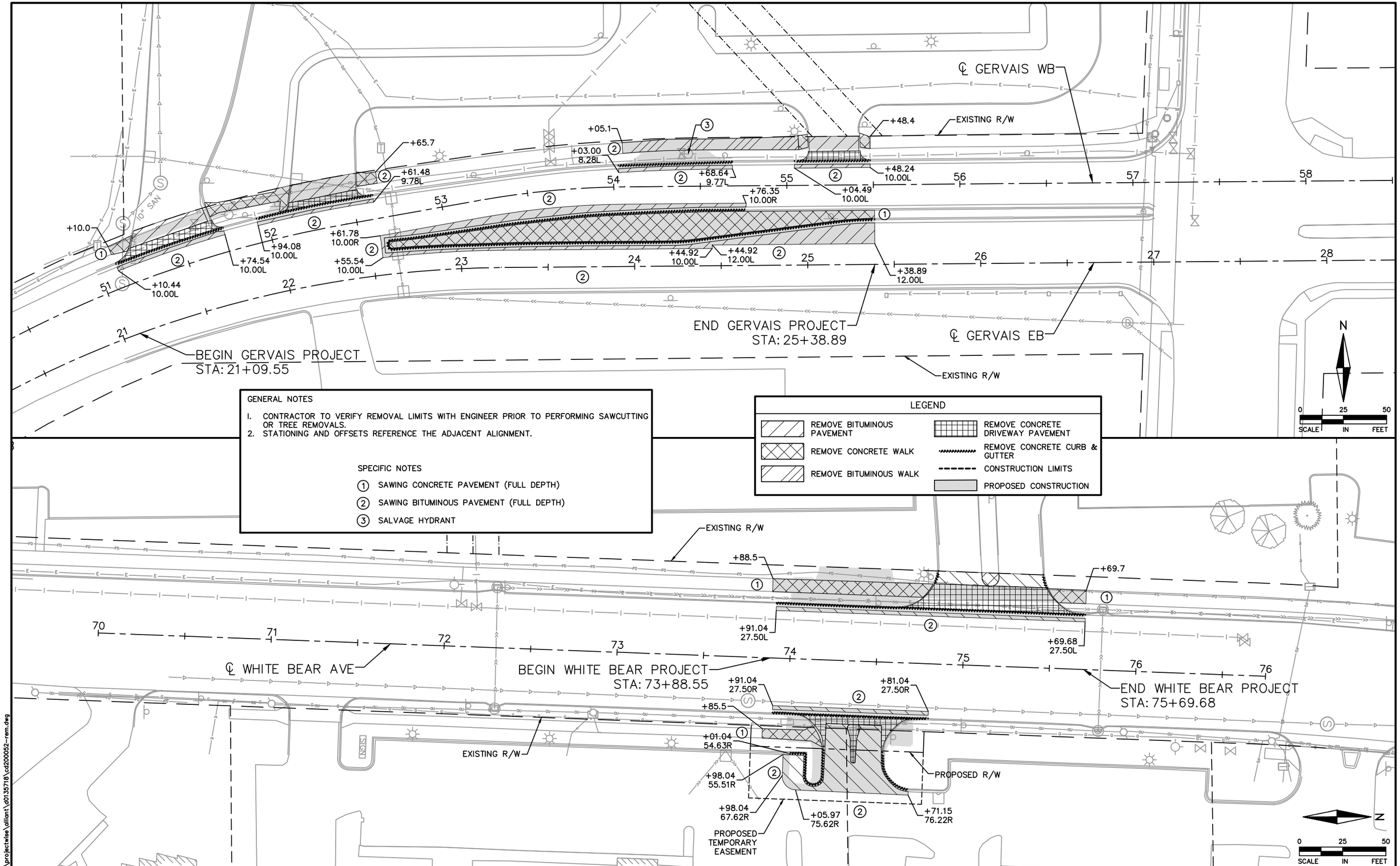

NO	DATE	DWN	CKD	REVISIONS

ALLIANT

I HEREBY CERTIFY THAT THIS SHEET WAS PREPARED BY ME OR UNDER MY DIRECT SUPERVISION AND THAT I AM A DULY LICENSED PROFESSIONAL ENGINEER UNDER THE LAWS OF THE STATE OF MINNESOTA.

PRINT NAME: SEAN M. JOHNSTON
SIGNATURE:
DATE XX/XX/2020 LICENSE # 52701

INPLACE TOPOGRAPHY & REMOVAL PLAN

GERVAIS AVENUE & WHITE BEAR AVENUE

RAMSEY COUNTY
WHITE BEAR AVENUE (CSAH 65) & GERVAIS AVENUE IMPROVEMENTS

1:28:35 PM
4/23/2020
c:\pw_working\projectwise\alliant\d0135718\cd200052-rem.dwg

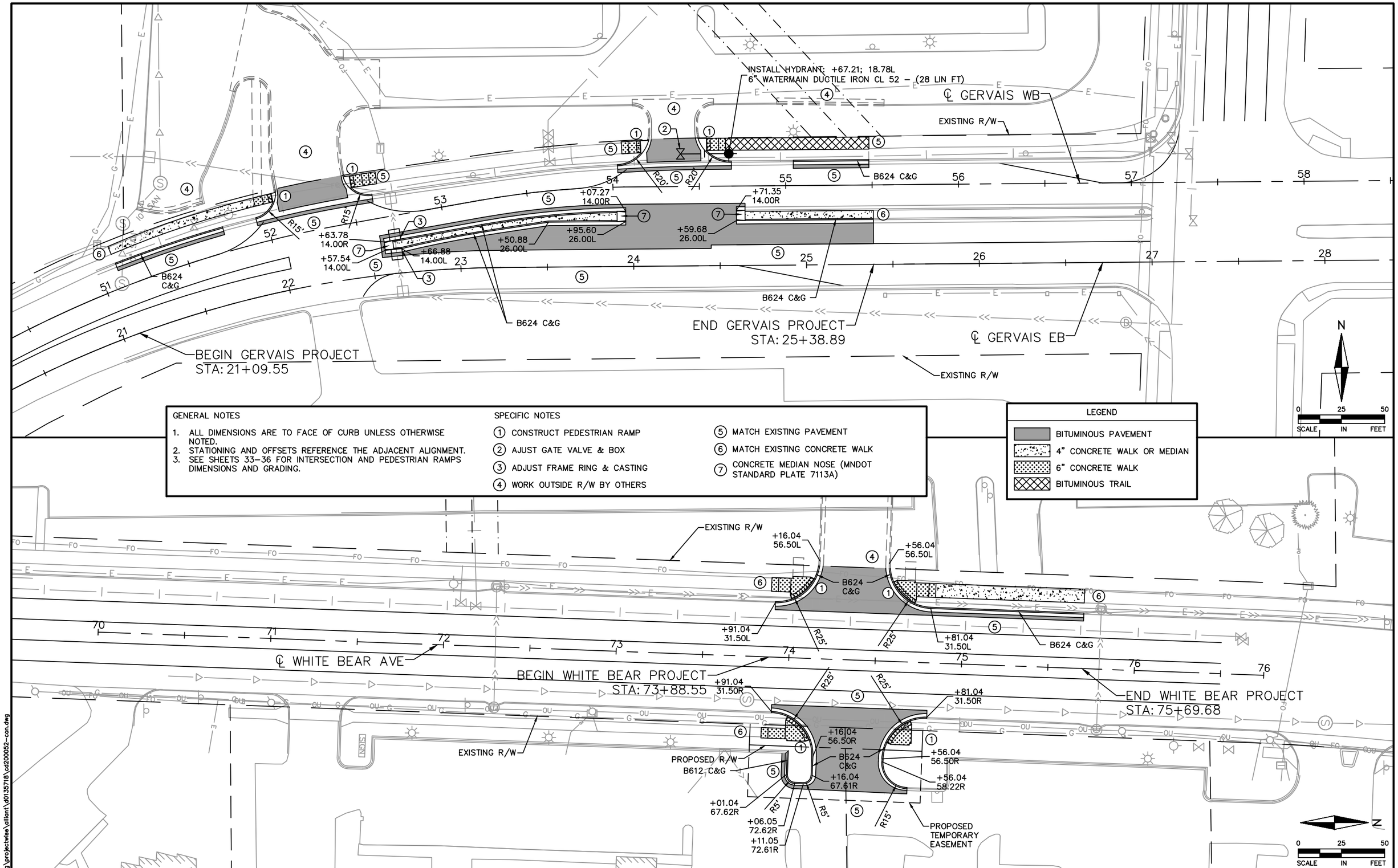

NO	DATE	DWN	CKD	REVISIONS

ALLIANT

I HEREBY CERTIFY THAT THIS SHEET WAS PREPARED BY ME OR UNDER MY DIRECT SUPERVISION AND THAT I AM A DULY LICENSED PROFESSIONAL ENGINEER UNDER THE LAWS OF THE STATE OF MINNESOTA.

PRINT NAME: SEAN M. JOHNSTON
SIGNATURE:
DATE XX/XX/2020 LICENSE # 52701

CONSTRUCTION PLAN
GERVAIS AVENUE & WHITE BEAR AVENUE

RAMSEY COUNTY
WHITE BEAR AVENUE (CSAH 65) & GERVAIS AVENUE IMPROVEMENTS

1:28:42 PM
4/23/2020
c:\pw_working\projectwise\alliant\d0135718\cd200052-con.dwg

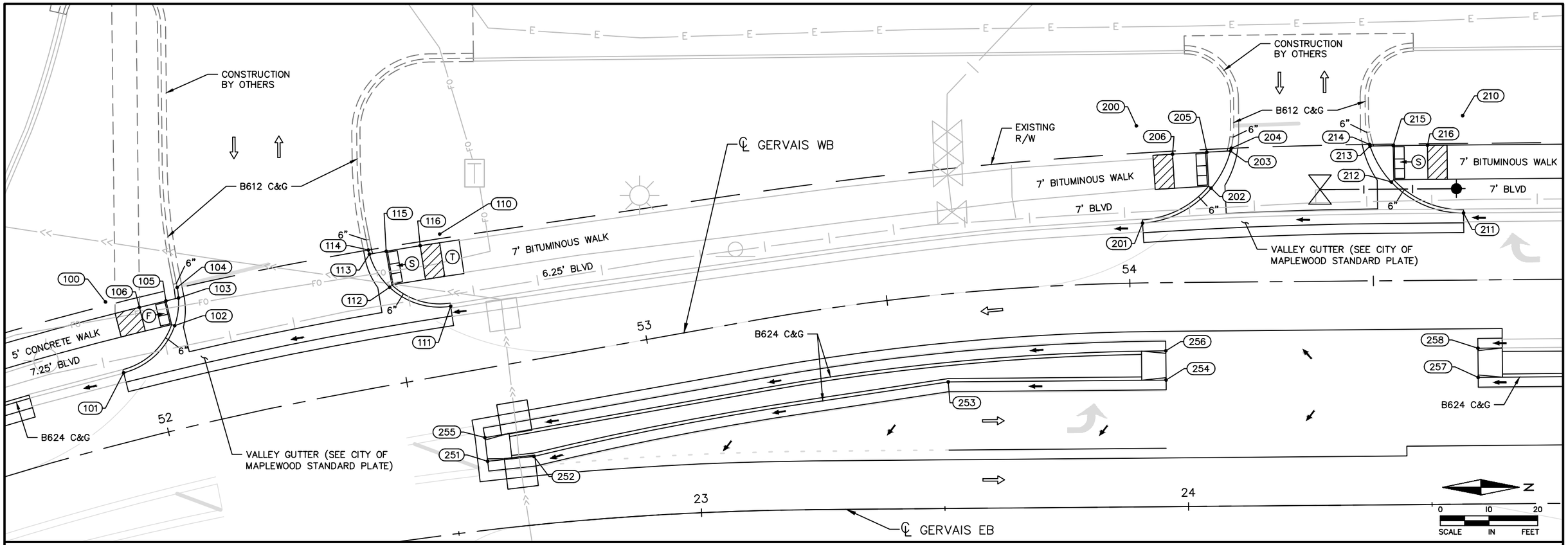

CONTROL POINTS											
POINT NO.	ALIGN.	STATION	OFFSET (FT)	ELEV.	DESCRIPTION	POINT NO.	ALIGN.	STATION	OFFSET (FT)	ELEV.	DESCRIPTION
WEST DRIVE WEST RAMP						EAST DRIVE WEST RAMP					
100	GERVIAS WB	51+94.08	−29.00	–	R=15'	200	GERVIAS WB	54+01.91	−32.26	–	R=20'
101	GERVIAS WB	51+94.08	−14.00	913.31		201	GERVIAS WB	54+02.81	−12.28	919.51	
102	GERVIAS WB	52+06.25	−20.89	913.89		202	GERVIAS WB	54+16.86	−19.29	920.00	
103	GERVIAS WB	52+08.25	−26.25	913.94		203	GERVIAS WB	54+20.90	−26.93	920.05	
104	GERVIAS WB	52+08.46	−28.41	913.92	LIMIT	204	GERVIAS WB	54+21.04	−27.47	920.04	LIMIT
105	GERVIAS WB	52+05.70	−26.25	913.97		205	GERVIAS WB	54+16.03	−26.71	920.11	
106	GERVIAS WB	52+00.30	−26.25	914.13		206	GERVIAS WB	54+08.99	−26.37	920.11	
WEST DRIVE EAST RAMP						EAST DRIVE EAST RAMP					
110	GERVIAS WB	52+61.96	−28.77	–	R=35'	210	GERVIAS WB	54+68.62	−33.77	–	R=35'
111	GERVIAS WB	52+61.58	−13.78	915.25		211	GERVIAS WB	54+68.64	−13.77	921.46	
112	GERVIAS WB	52+49.93	−19.82	915.56		212	GERVIAS WB	54+53.86	−20.27	921.34	
113	GERVIAS WB	52+47.04	−27.24	915.64		213	GERVIAS WB	54+49.57	−27.68	921.40	
114	GERVIAS WB	52+46.98	−28.12	915.63	LIMIT	214	GERVIAS WB	54+49.46	−28.02	921.39	LIMIT
115	GERVIAS WB	52+50.53	−27.22	915.69		215	GERVIAS WB	54+54.31	−27.73	921.45	
116	GERVIAS WB	52+57.60	−27.12	916.26		216	GERVIAS WB	54+61.36	−27.75	922.01	
SOUTH SIDE OF MEDIAN						NORTH SIDEN OF MEDIAN					
251	GERVIAS EB	22+57.54	−14.00	915.99		255	GERVIAS WB	52+63.78	14.00	916.05	
252	GERVIAS EB	22+66.88	−14.00	916.16	BEGIN TAPER	256	GERVIAS WB	54+07.27	14.00	920.17	
523	GERVIAS EB	23+50.88	−26.00	919.07	END TAPER						
254	GERVIAS EB	23+95.60	−26.00	920.44							
257	GERVIAS EB	24+59.68	−26.00	922.34		258	GERVIAS WB	54+71.35	14.00	922.15	

(XXX) CONTROL POINT

TRUNCATED DOMES (SEE MNDOT STANDARD PLATE 7038)

CONSTRUCT CONCRETE CURB & GUTTER

X" CURB HEIGHT

LANDING AREA – 4' X 4' MIN DIMENSIONS AND MAX 2.0% SLOPE IN ALL DIRECTIONS

(S) INDICATES PEDESTRIAN RAMP – SLOPE SHALL BE BETWEEN 5.0% MIN AND 8.3% MAX DIRECTION SHOWN AND CROSS-SLOPE SHALL NOT EXCEED 2.0%

(F) INDICATES PEDESTRIAN RAMP – SLOPE SHALL BE GREATER THAN 2.0% AND LESS THAN 5.0% IN DIRECTION SHOWN AND CROSS-SLOPE SHALL NOT EXCEED 2.0%

TRAFFIC DIRECTION

DRAINAGE FLOW ARROW

(T) TRANSITION PANEL(S) – TO BE USED FOR TRANSITIONING THE CROSS-SLOPE OF A RAMP TO THE EXISTING WALK CROSS-SLOPE, RATE OF TRANSITION SHOULD BE 0.5% PER 1 LINEAR FOOT OF WALK, SEE THIS SHEET FOR ADDITIONAL INFORMATION.

GENERAL NOTES:

1. CONTROL POINTS LOCATED AT CURB & GUTTER ARE AT THE FLOW LINE.
2. DETAIL SHOWN OUTSIDE THE R/W FOR INFORMATION ONLY. WORK BY OTHERS. COORDINATE WITH PRIVATE DEVELOPMENT CONSTRUCTION.

1:28:49 PM
4/23/2020
c:\pw_working\projectwise\alliant\d0135718\cd200052-int.dwg

NO	DATE	DWN	CKD	REVISIONS

ALLIANT

I HEREBY CERTIFY THAT THIS SHEET WAS PREPARED BY ME OR UNDER MY DIRECT SUPERVISION AND THAT I AM A DULY LICENSED PROFESSIONAL ENGINEER UNDER THE LAWS OF THE STATE OF MINNESOTA.

PRINT NAME: SEAN M. JOHNSTON
SIGNATURE:
DATE XX/XX/2020 LICENSE # 52701

INTERSECTION DETAILS
GERVAIS AVENUE

RAMSEY COUNTY
WHITE BEAR AVENUE (CSAH 65) & GERVAIS AVENUE IMPROVEMENTS

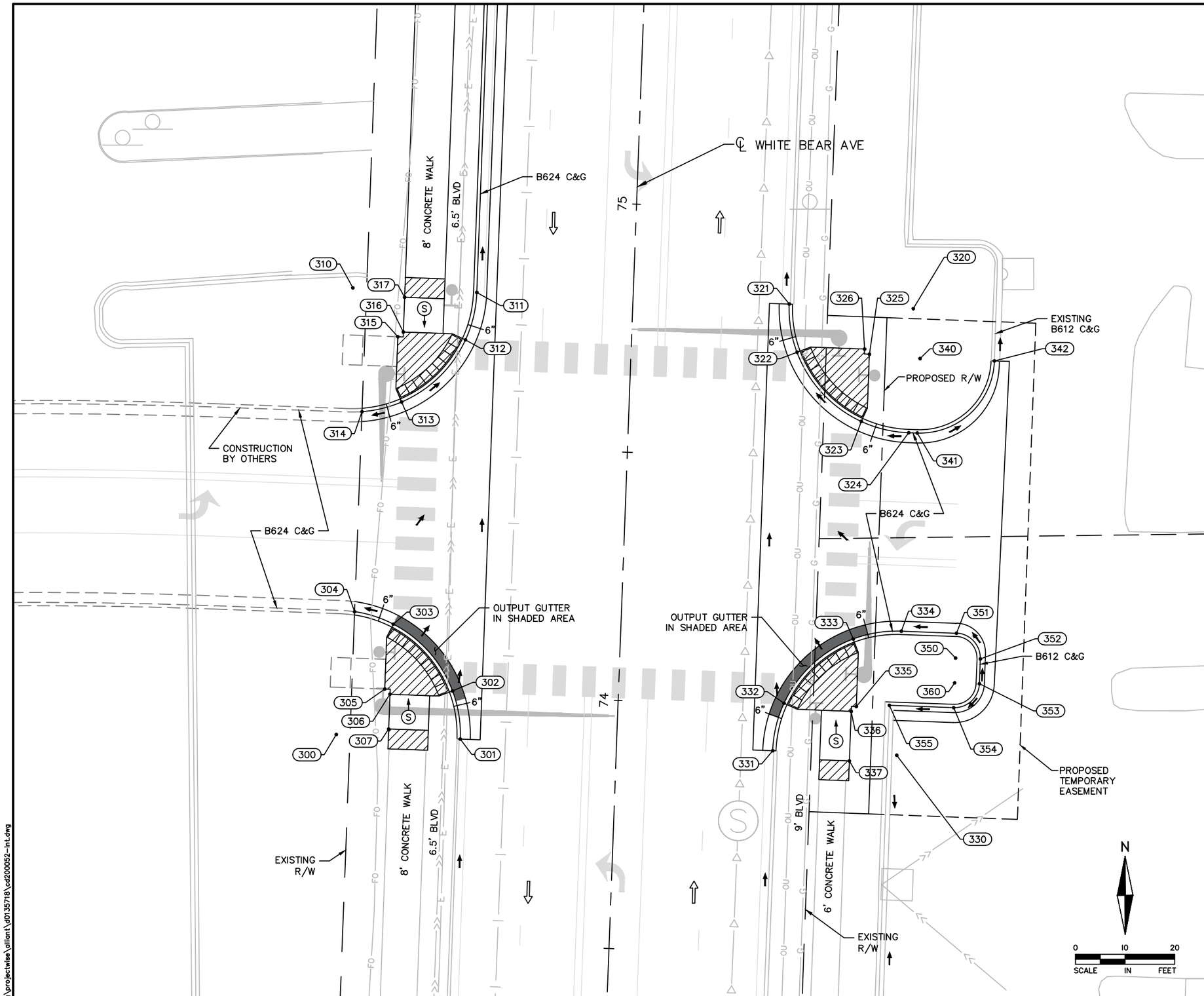

CONTROL POINTS					
POINT NO.	ALIGN.	STATION	OFFSET (FT)	ELEV.	DESCRIPTION
SW CORNER					
300	WHITE BEAR	73+91.04	−56.50	–	R=25'
301	WHITE BEAR	73+91.04	−31.50	922.88	MATCH HEIGHT
302	WHITE BEAR	74+00.67	−33.43	922.83	GUTTER OUT
303	WHITE BEAR	74+13.65	−45.83	922.96	GUTTER OUT
304	WHITE BEAR	74+15.89	−53.73	922.80	LIMIT
305	WHITE BEAR	74+00.54	−47.08	923.00	
306	WHITE BEAR	73+99.55	−46.00	923.00	
307	WHITE BEAR	73+92.55	−46.00	923.56	
NW CORNER					
310	WHITE BEAR	74+81.04	−56.50	–	R=25'
311	WHITE BEAR	74+81.04	−31.50	922.53	MATCH HEIGHT
312	WHITE BEAR	74+71.42	−33.43	922.58	
313	WHITE BEAR	74+58.43	−45.83	922.80	
314	WHITE BEAR	74+56.20	−53.73	922.64	LIMIT
315	WHITE BEAR	74+71.54	−47.08	922.78	
316	WHITE BEAR	74+72.54	−46.00	922.78	
317	WHITE BEAR	74+79.54	−46.00	923.28	
NE CORNER					
320	WHITE BEAR	74+81.04	56.50	–	R=25'
321	WHITE BEAR	74+81.04	31.50	922.63	MATCH HEIGHT
322	WHITE BEAR	74+71.42	33.43	922.78	
323	WHITE BEAR	74+57.97	46.87	923.09	
324	WHITE BEAR	74+56.04	56.50	923.25	
325	WHITE BEAR	74+71.54	48.00	923.05	
326	WHITE BEAR	74+72.54	47.00	923.05	
340	WHITE BEAR	74+71.04	58.23	–	R=15'
341	WHITE BEAR	74+56.04	58.23	923.23	
342	WHITE BEAR	74+71.13	73.23	922.75	MATCH B612 C&G
SE CORNER					
330	WHITE BEAR	73+91.04	56.50	–	R=25'
331	WHITE BEAR	73+91.04	31.50	922.92	MATCH HEIGHT
332	WHITE BEAR	74+00.67	33.43	923.10	GUTTER OUT
333	WHITE BEAR	74+14.12	46.87	923.33	GUTTER OUT
334	WHITE BEAR	74+16.04	56.50	923.45	
335	WHITE BEAR	74+00.54	48.00	923.36	
336	WHITE BEAR	73+99.55	47.00	923.36	
337	WHITE BEAR	73+89.55	47.00	924.16	
350	WHITE BEAR	74+11.04	67.61	–	R=5'
351	WHITE BEAR	74+16.04	67.61	923.59	
352	WHITE BEAR	74+11.05	72.61	923.70	BEGIN B612 C&G
360	WHITE BEAR	74+06.04	67.62	–	R=5'
353	WHITE BEAR	74+06.05	72.62	923.76	
354	WHITE BEAR	74+01.04	67.62	923.66	
355	WHITE BEAR	74+01.04	54.63	923.50	MATCH B612 C&G

(XXX) CONTROL POINT

TRUNCATED DOMES (SEE MNDOT STANDARD PLATE 7038)

CONSTRUCT CONCRETE CURB & GUTTER

X" CURB HEIGHT

LANDING AREA – 4' X 4' MIN DIMENSIONS AND MAX 2.0% SLOPE IN ALL DIRECTIONS

(S) INDICATES PEDESTRIAN RAMP – SLOPE SHALL BE BETWEEN 5.0% MIN AND 8.3% MAX DIRECTION SHOWN AND CROSS-SLOPE SHALL NOT EXCEED 2.0%

(F) INDICATES PEDESTRIAN RAMP – SLOPE SHALL BE GREATER THAN 2.0% AND LESS THAN 5.0% IN DIRECTION SHOWN AND CROSS-SLOPE SHALL NOT EXCEED 2.0%

TRAFFIC DIRECTION

DRAINAGE FLOW ARROW

(T) TRANSITION PANEL(S) – TO BE USED FOR TRANSITIONING THE CROSS-SLOPE OF A RAMP TO THE EXISTING WALK CROSS-SLOPE, RATE OF TRANSITION SHOULD BE 0.5% PER 1 LINEAR FOOT OF WALK, SEE THIS SHEET FOR ADDITIONAL INFORMATION.

GENERAL NOTES:

1. CONTROL POINTS LOCATED AT CURB & GUTTER ARE AT THE FLOW LINE.
2. DETAIL SHOWN OUTSIDE THE R/W FOR INFORMATION ONLY. WORK BY OTHERS. COORDINATE WITH PRIVATE DEVELOPMENT CONSTRUCTION.

NO	DATE	DWN	CKD	REVISIONS

ALLIANT

I HEREBY CERTIFY THAT THIS SHEET WAS PREPARED BY ME OR UNDER MY DIRECT SUPERVISION AND THAT I AM A DULY LICENSED PROFESSIONAL ENGINEER UNDER THE LAWS OF THE STATE OF MINNESOTA.

PRINT NAME: SEAN M. JOHNSTON

SIGNATURE:

DATE XX/XX/2020 LICENSE # 52701

INTERSECTION DETAILS

WHITE BEAR AVENUE

RAMSEY COUNTY

WHITE BEAR AVENUE (CSAH 65) & GERVAIS AVENUE IMPROVEMENTS

1:28:50 PM
4/23/2020
c:\pw_working\projectwise\alliant\d0135718\cd200052-int.dwg

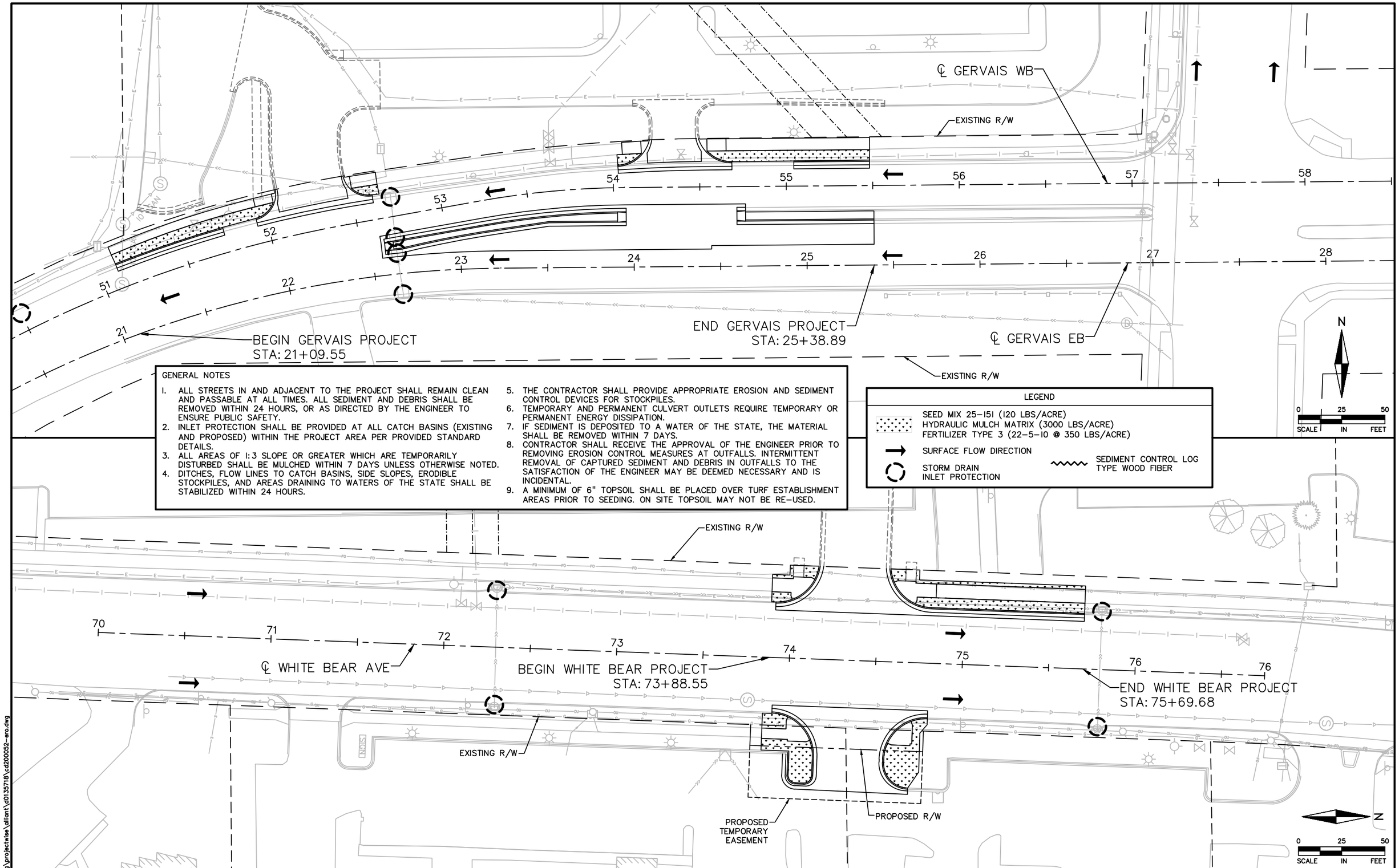

GENERAL NOTES

1. ALL STREETS IN AND ADJACENT TO THE PROJECT SHALL REMAIN CLEAN AND PASSABLE AT ALL TIMES. ALL SEDIMENT AND DEBRIS SHALL BE REMOVED WITHIN 24 HOURS, OR AS DIRECTED BY THE ENGINEER TO ENSURE PUBLIC SAFETY.
2. INLET PROTECTION SHALL BE PROVIDED AT ALL CATCH BASINS (EXISTING AND PROPOSED) WITHIN THE PROJECT AREA PER PROVIDED STANDARD DETAILS.
3. ALL AREAS OF 1:3 SLOPE OR GREATER WHICH ARE TEMPORARILY DISTURBED SHALL BE MULCHED WITHIN 7 DAYS UNLESS OTHERWISE NOTED.
4. DITCHES, FLOW LINES TO CATCH BASINS, SIDE SLOPES, ERODIBLE STOCKPILES, AND AREAS DRAINING TO WATERS OF THE STATE SHALL BE STABILIZED WITHIN 24 HOURS.
5. THE CONTRACTOR SHALL PROVIDE APPROPRIATE EROSION AND SEDIMENT CONTROL DEVICES FOR STOCKPILES.
6. TEMPORARY AND PERMANENT CULVERT OUTLETS REQUIRE TEMPORARY OR PERMANENT ENERGY DISSIPATION.
7. IF SEDIMENT IS DEPOSITED TO A WATER OF THE STATE, THE MATERIAL SHALL BE REMOVED WITHIN 7 DAYS.
8. CONTRACTOR SHALL RECEIVE THE APPROVAL OF THE ENGINEER PRIOR TO REMOVING EROSION CONTROL MEASURES AT OUTFALLS. INTERMITTENT REMOVAL OF CAPTURED SEDIMENT AND DEBRIS IN OUTFALLS TO THE SATISFACTION OF THE ENGINEER MAY BE DEEMED NECESSARY AND IS INCIDENTAL.
9. A MINIMUM OF 6" TOPSOIL SHALL BE PLACED OVER TURF ESTABLISHMENT AREAS PRIOR TO SEEDING. ON SITE TOPSOIL MAY NOT BE RE-USED.

LEGEND

- SEED MIX 25-151 (120 LBS/ACRE)
  HYDRAULIC MULCH MATRIX (3000 LBS/ACRE)
  FERTILIZER TYPE 3 (22-5-10 @ 350 LBS/ACRE)
- SURFACE FLOW DIRECTION
- STORM DRAIN INLET PROTECTION
- SEDIMENT CONTROL LOG TYPE WOOD FIBER

1:28:56 PM
4/23/2020
c:\pw_working\projectwise\alliant\d0135718\cd200052-ero.dwg

NO	DATE	DWN	CKD	REVISIONS

ALLIANT

I HEREBY CERTIFY THAT THIS SHEET WAS PREPARED BY ME OR UNDER MY DIRECT SUPERVISION AND THAT I AM A DULY LICENSED PROFESSIONAL ENGINEER UNDER THE LAWS OF THE STATE OF MINNESOTA.

PRINT NAME: SEAN M. JOHNSTON
SIGNATURE:
DATE XX/XX/2020 LICENSE # 52701

EROSION CONTROL AND TURF ESTABLISHMENT PLAN

GERVAIS AVENUE & WHITE BEAR AVENUE

RAMSEY COUNTY
WHITE BEAR AVENUE (CSAH 65) & GERVAIS AVENUE IMPROVEMENTS

PERMANENT PAVEMENT MARKING PLAN

NOTES & GUIDELINES

GENERAL INFORMATION:

THE ENGINEER'S INVOLVEMENT IN THE APPLICATION OF THE MATERIAL SHALL BE LIMITED TO FIELD CONSULTATION AND INSPECTION. THE CONTRACTOR WILL PLACE NECESSARY "SPOTTING" AT APPROPRIATE POINTS TO PROVIDE HORIZONTAL CONTROL FOR STRIPING AND TO DETERMINE NECESSARY STARTING AND CUTOFF POINTS. LONGITUDINAL JOINTS, PAVEMENT EDGES AND EXISTING MARKINGS MAY SERVE AS HORIZONTAL CONTROL WHEN SO DIRECTED.

EDGE LINES AND LANE LINES ARE TO BE BROKEN ONLY AT INTERSECTIONS WITH PUBLIC ROADS AND AT PRIVATE ENTRANCES IF THEY ARE CONTROLLED BY AN AGENCY PLACED YIELD SIGN, STOP SIGN OR TRAFFIC SIGNAL. THE BREAK POINT IS TO BE AT THE START OF THE RADIUS FOR THE INTERSECTION OR AT MARKED STOP LINES OR CROSSWALKS.

A TOLERANCE OF 1/4 INCH UNDER OR 1/4 INCH OVER THE SPECIFIED WIDTH WILL BE ALLOWED FOR STRIPING PROVIDED THE VARIATION IS GRADUAL AND DOES NOT DETRACT FROM THE GENERAL APPEARANCE. BROKEN LINE SEGMENTS MAY VARY UP TO 3 INCHES FROM THE SPECIFIED LENGTHS PROVIDED THE OVER AND UNDER VARIATIONS ARE REASONABLY COMPENSATORY. ALIGNMENT DEVIATIONS FROM THE CONTROL GUIDE SHALL NOT EXCEED 1 INCH. MATERIAL SHALL NOT BE APPLIED OVER LONGITUDINAL JOINTS. ESTABLISHMENT OF APPLICATION TOLERANCES SHALL NOT RELIEVE THE CONTRACTOR OF THEIR RESPONSIBILITY TO COMPLY AS CLOSELY AS PRACTICABLE WITH THE PLANNED DIMENSIONS.

JUST PRIOR TO THE PLACEMENT OF PAVEMENT MARKINGS THE ROAD SURFACE SHALL BE CLEANED AND FREE OF CONTAMINATION AS RECOMMENDED BY THE MATERIAL MANUFACTURER AND ACCEPTABLE TO THE ENGINEER. PORTLAND CEMENT CONCRETE SURFACES SHALL BE SANDBLAST CLEANED TO REMOVE ANY SURFACE TREATMENTS AND/OR LAITANCE.

APPLY ALL PAVEMENT MARKINGS AS RECOMMENDED BY THE MATERIAL MANUFACTURER.

PERMANENT PAVEMENT MARKINGS SHALL NOT BE PLACED OVER TEMPORARY TAPE MARKINGS.

THE FILLING OF TANKS, POURING OF MATERIALS OR CLEANING OF EQUIPMENT SHALL NOT BE PERFORMED ON UNPROTECTED PAVEMENT SURFACES UNLESS ADEQUATE PROVISIONS ARE MADE TO PREVENT SPILLAGE OF MATERIAL.

REFER TO SPECIAL PROVISIONS OR SPEC BOOK FOR GROUND IN/RECESSED PAVEMENT MARKING APPLICATION REQUIREMENTS.

MULTI–COMPONENT LIQUID:

THE ROAD SURFACE SHALL BE CLEANED AT THE DIRECTION OF THE ENGINEER JUST PRIOR TO APPLICATION. PAVEMENT CLEANING SHALL CONSIST OF AT LEAST BRUSHING WITH A ROTARY BROOM (NON–METALLIC) OR AS RECOMMENDED BY THE MATERIAL MANUFACTURER AND ACCEPTABLE TO THE ENGINEER. NEW PORTLAND CEMENT CONCRETE SURFACES SHALL BE SANDBLAST CLEANED TO REMOVE ANY SURFACE TREATMENTS AND/OR LAITANCE.

THE MULTI–COMPONENT LIQUID MARKING APPLICATION SHALL IMMEDIATELY FOLLOW THE PAVEMENT CLEANING. GLASS BEADS SHALL BE APPLIED IMMEDIATELY AFTER APPLICATION OF THE MULTI–COMPONENT LIQUID PAVEMENT MARKING.

APPLY MULTI–COMPONENT LIQUID MARKINGS WITH A MINIMUM THICKNESS OF 20 MILS; GLASS BEADS SHALL BE APPLIED AT A RATE OF AT LEAST 25 LB/GAL. THE "NO–TRACKING" CONDITION SHALL BE DETERMINED ON AN APPLICATION OF SPECIFIED THICKNESS TO THE PAVEMENT AND COVERED WITH GLASS BEADS AT THE RATE OF AT LEAST 25 LB/GAL.

PAVEMENT MARKINGS SHALL ONLY BE APPLIED IN SEASONABLE WEATHER WHEN AIR AND PAVEMENT SURFACE TEMPERATURES ARE 40°F OR HIGHER AND SHALL NOT BE APPLIED WHEN THE WIND OR OTHER CONDITIONS CAUSE A FILM OF DUST TO BE DEPOSITED ON THE PAVEMENT SURFACE AFTER CLEANING AND BEFORE THE MARKING MATERIAL CAN BE APPLIED.

PREFORMED MARKINGS:

MANUFACTURER CERTIFICATIONS ARE REQUIRED FOR INSTALLERS, AND WRITTEN CERTIFICATION SHALL BE PRESENTED AT ANYTIME UPON REQUEST OF ENGINEER OR OTHER STATE PERSONNEL.

DO NOT USE LINE MATERIAL TO PIECE TOGETHER INDIVIDUAL LETTERS, SYMBOLS, OR CROSSWALK BLOCKS. UTILIZE PRECUT KITS PROVIDED BY THE MANUFACTURER. TWO STRIPS OF 18" LINE MATERIAL MAY BE USED TO FORM CROSSWALK BLOCKS OF 36" WIDTH.

DO NOT USE NARROWER LINE MATERIAL TO PIECE TOGETHER WIDER LINES.

IF THERE IS A CRACK OR JOINT IN ROAD SURFACE. (FOR TAPE LAY OVER CRACK OR JOINT THEN CUT TAPE 1" ON EACH SIDE OF CRACK OR JOINT). (FOR THERMO MAKE A DEEP SCORE IN THE MATERIAL ONCE IT HAS SET UP BUT NOT ENTIRELY COOLED DOWN).

SYMBOLS & MATERIALS LEGEND

6' x 2.5' CROSSWALK MARKING –MULTI–COMP

PAVEMENT MESSAGE (LEFT OR RIGHT ARROW) – MULTI–COMP GROUND IN (15 SQ FT EACH)

STRIPING KEY

CIRCLE–MULTI COMP

OCTAGON–PREF THERMO

SQUARE–PREF TAPE

TRIANGLE–PAINT

1ST DIGIT WIDTH	2ND DIGIT PATTERN	3RD DIGIT COLOR
4", 8", ETC.	S – SOLID B – BROKEN T – DOTTED D – DOUBLE	W – WHITE Y – YELLOW

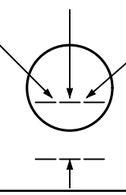

G=GROUND IN W=WET REFLECTIVE
C=CONTRAST

EXAMPLE: 4SW GW = 4" SOLID LINE WHITE MULTI–COMPONENT GROUND IN, WET REFLECTIVE

PAVEMENT MARKING TABULATION

ITEM NO.	ITEM	UNIT	TOTAL ESTIMATED QUANTITY
2102.503	PAVEMENT MARKING REMOVAL	LIN FT	3000
2102.518	PAVEMENT MARKING REMOVAL	SQ FT	1030
2582.503	4" SOLID LINE MULTI–COMPONENT (WR)	LIN FT	5000
2582.503	8" SOLID LINE MULTI–COMPONENT (WR)	LIN FT	200
2582.503	24" SOLID LINE MULTI–COMPONENT (WR)	LIN FT	200
2582.503	4" BROKEN LINE MULTI–COMPONENT (WR)	LIN FT	300
2582.503	4" DOTTED LINE MULTI–COMPONENT (WR)	LIN FT	50
2582.503	8" DOTTED LINE MULTI–COMPONENT (WR)	LIN FT	66
2582.503	4" DOUBLE SOLID LINE MULTI–COMPONENT (WR)	LIN FT	1700
2582.518	PAVEMENT MESSAGE MULTI–COMPONENT	SQ FT	232
2582.518	CROSSWALK MULTI–COMPONENT	SQ FT	540

SIGN PANELS TYPE C

SIGNS QTY	CODE NO	PANEL LEGEND	PANEL SIZE	PANEL AREA	MTG HT (1)	POSTS/MOUNTING NUMBER OF POSTS	POSTS/MOUNTING POST TYPE	POSTS/MOUNTING RISER POST SIZE	POSTS/MOUNTING SURFACE TYPE	TOTAL AREA
EACH			INCH	SQ FT	FEET			INCHES		SQ FT
2	R1–1	STOP	30 x 30	6.25	7	1	ST	2	SOIL	12.50
1	R2–1	SPEED LIMIT 35	30 x 36	7.50	7	1	ST	2	SOIL	7.50
1	R2–1	SPEED LIMIT 40	30 x 36	7.50	7	1	ST	2	SOIL	7.50
1	R3–7L	LEFT LANE MUST TURN LEFT	30 x 30	6.25	7	1	ST	2	SOIL	6.25
3	R3–7R	RIGHT LANE MUST TURN RIGHT	30 x 30	6.25	7	1	ST	2	SOIL	18.75
4	R3–8ACA	(LEFT ARROW) ONLY (THRU ARROW) ONLY (RIGHT ARROW) ONLY	54 x 30	11.25	7	1	ST	2	SOIL	45.00
4	R3–8ACD	(LEFT ARROW) ONLY (THRU ARROW) ONLY (THROUGH/RIGHT ARROW) ONLY	54 x 30	11.25	7	1	ST	2	SOIL	45.00
1	R4–7	KEEP RIGHT (SYMBOL)	24 x 30	5.00	7	1	ST	2	CONCRETE	5.00
1	R3–9B	CENTER LANE ONLY TWO–WAY LEFT TURN	24 x 36	6.00	7	1	ST	2	SOIL	6.00
1	R8–3	NO PARKING (SYMBOL)	30 x 30	6.25	7	1	ST	2	SOIL	6.25
1	W11–2	PEDESTRIAN CROSSING (SYMBOL)	36 x 36	9.00	7	1	ST	2	SOIL	9.00
1	X4–11	TYPE 4 OBJECT MARKER FOR END OF ROADWAY	18 x 18	2.25	7	1	ST	2	CONCRETE	2.25
									TOTAL	171.00

SPECIFIC NOTES:

(1) MOUNTING HEIGHT IS MINIMUM (WITH A +6 INCH TOLERANCE) SEE STANDARD SIGN PLACEMENT TYPE C & D DETAIL FOR FOR TYPICAL MOUNTING.

(2) PAID AS OBJECT MARKER X4–2.

GENERAL NOTES:

3. FOR 2 INCH RISER POST IN SOIL USE NON RECOVERABLE FIN BASE PLACED PER MANUFACTURER'S SPECIFICATIONS. USE A 12 GUAGE, 2" X 2" PRE–PUNCHED, GALVANIZED STEEL, SQUARE TUBE RISER POST. INSTALL 3/8" STAINLESS STEEL BOLT THROUGH THE 5TH HOLE DOWN FROM THE TOP OF THE BASE. RISER POST SHALL REST ON THE BOLT.

4. FOR 2 INCH RISER POST ON CONCRETE USE RECOVERABLE SHEAR BOLT BASE PLACED PER MANUFACTURER'S SPECIFICATIONS. USE A 12 GUAGE, 2" X 2" PRE–PUNCHED, GALVANIZED STEEL, SQUARE TUBE RISER POST WITH A 12 GAUGE, 1–3/4" X 1–3/4" X 36" PRE–PUNCHED GALVANIZED STEEL, SQUARE TUBE POST INTERNAL INSERT.

TURN LANE ARROW MESSAGE LANE LESS THAN 200' LONG

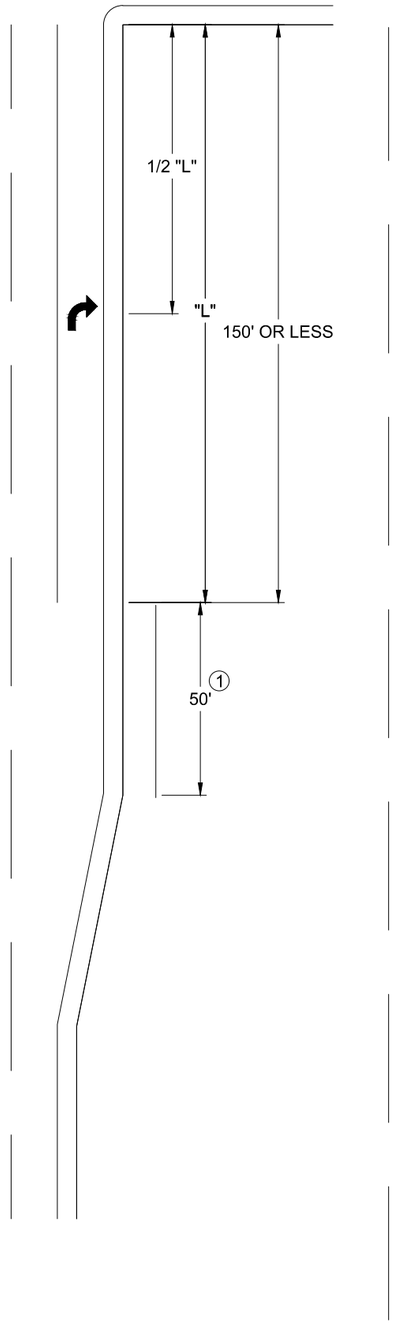

TURN LANE ARROW MESSAGE LANE GREATER THAN 200' LONG

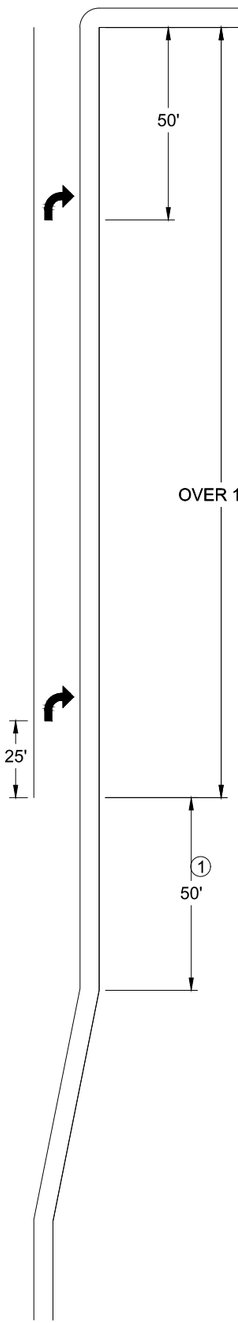

SURVEY MARKER

16' OF 12" SOLID WHITE

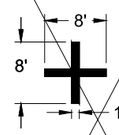

BIKE SYMBOL AND ARROW

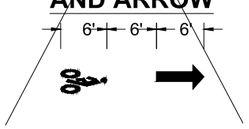

4" SKIP CYCLES

CENTERLINE AND CENTER TURN LANE
10' SKIP WITH 40' SPACE (50' OVERALL CYCLE)

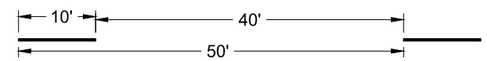

BIKE LANES APPROACHING INTERSECTIONS AND BUS STOPS
6' SPACE AND 2' SKIP (8' OVERALL CYCLE)
32' STANDARD LENGTH WHEN APPROACHING INTERSECTION
80' WHEN BUS STOP PRESENT

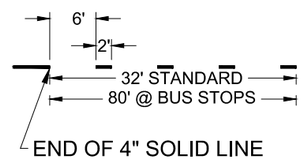

8" X 3' SKIP CYCLE

LANE ENDS
3' SKIP AND 12' SPACE (15' OVERALL CYCLE)

CROSSWALK BLOCKS

CROSSWALK BLOCKS SHALL BE CENTERED
ON AND IN BETWEEN LANE LINES

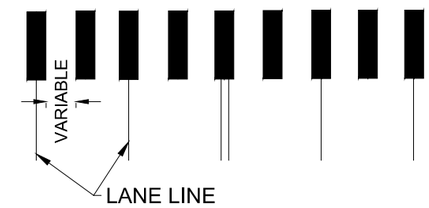

TYPICAL CROSSWALK BLOCKS ARE
2.5' WIDE AND 8' LONG

PAINTED MEDIAN

24" SOLID LINE AT 45° ANGLE
SPACE 20' FROM FRONT EDGE OF LINES

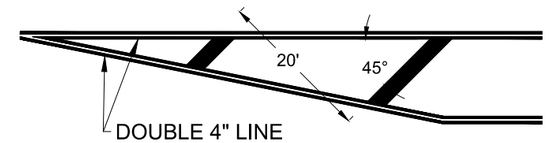

TYPICAL CENTER LEFT TURN LAYOUT

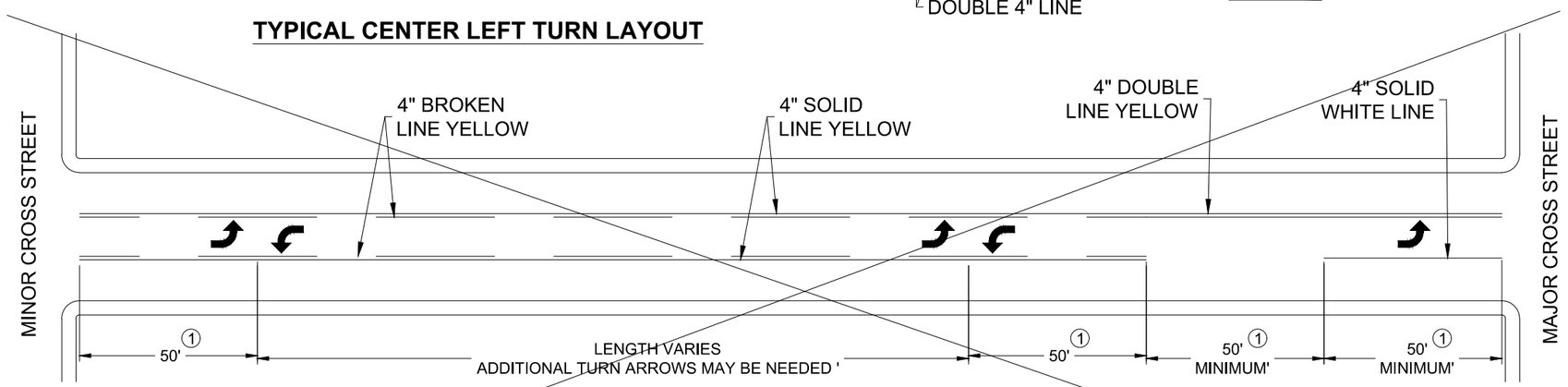

TYPICAL CENTER LEFT TURN ARROWS

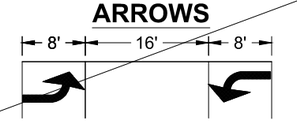

NOTES

ALL DIMENSIONS ARE TYPICAL, SEE PLAN FOR SPECIFIC LAYOUT
① FIELD CONDITIONS MAY EXCEED TYPICAL OR MINIMUM REQUIREMENTS; STRIPE AS DIRECTED BY ENGINEER

1:29:05 PM
4/23/2020
c:\pw_working\projectwise\alliant\d0135718\cd200052-spm.dwg

NO	DATE	DWN	CKD	REVISIONS

ALLIANT

I HEREBY CERTIFY THAT THIS SHEET WAS PREPARED BY ME OR UNDER MY DIRECT SUPERVISION AND THAT I AM A DULY LICENSED PROFESSIONAL ENGINEER UNDER THE LAWS OF THE STATE OF MINNESOTA.

PRINT NAME: SEAN M. JOHNSTON
SIGNATURE:
DATE XX/XX/2020 LICENSE # 52701

SIGNING AND PAVEMENT MARKINGS PLAN
PAVEMENT MARKING DETAILS

RAMSEY COUNTY
WHITE BEAR AVENUE (CSAH 65) & GERVAIS AVENUE IMPROVEMENTS

GENERAL REQUIREMENTS

1. ALL SIGN POSTS SHALL BE 2" X 2" GALVANIZED STEEL TUBING, 12 GAUGE WITH 7/16" HOLES SPACED 1" APART ON ALL SIDES (TELSPAR)

2. MOUNTING (PUNCHING CODE) FOR TYPE "C" SIGN PANELS SHALL BE AS INDICATED IN THE STANDARD SIGNS MANUAL UNLESS OTHERWISE SPECIFIED. PLATED STEEL NYLON INSERT LOCK NUTS AS SHOWN.

3. USE STAINLESS STEEL 5/16" BOLTS AND WASHERS WITH PLATED STEEL NYLON INSERT LOCK NUTS FOR SIGN MOUNTING

4. STAINLESS STEEL WASHER WITH THE SAME DIMENSIONS SHALL BE PROVIDED BETWEEN ALL NYLON WASHERS AND BOLT HEADS.

5. ALL TRAFFIC CONTROL DEVICES SHALL CONFORM TO THE MINNESOTA MANUAL ON UNIFORM TRAFFIC CONTROL DEVICES, INCLUDING "FIELD MANUAL FOR TEMPORARY TRAFFIC CONTROL ZONE LAYOUTS – FEBRUARY 2011 OR NEWER.

6. ALL TRAFFIC CONTROL DEVICES SHALL HAVE DIAMOND GRADE (DG3) RETROREFLECTIVE SHEETING.

CONCRETE INSTALLATION

1. ALL SIGNS INSTALLED IN CONCRETE SURFACES SHALL CONSIST OF A BREAK AWAY UNIT
   - 1.1. UNIT SHALL ALLOW FOR 360° INDEXING FOR PROPER SIGN ORIENTATION AFTER INSTALLATION
   - 1.2. UNIT SHALL HAVE A STUB HEIGHT LESS THAN 4" AFTER BREAK AWAY.
   - 1.3. UNIT SHALL UTILIZE A SHEER BOLT AS IT'S MEANS OF BREAKING AWAY
   - 1.4. UNIT SHALL UTILIZE A LOCKING WEDGE OR SHIM TO ELIMINATE ALL TOLERANCE BETWEEN MOUNTING UNIT AND POST
     - 1.4.1. LOCKING WEDGE SHALL BE TAPPED INTO PLACE UNTIL SNUG. AVOID FORCING WEDGE INTO PLACE TO ELIMINATE POSSIBLE DAMAGE TO THE TOP COUPLING
   - 1.5. BREAK AWAY BASE SHALL BE INSERTED INTO A 2 ¼" X 2 ¼" 12 GAUGE ANCHOR POST WITH A MINIMUM LENGTH OF 36".
   - 1.6. BREAK AWAY BASE SHALL BE SECURED TO ANCHOR POST WITH A CORNER BOLT, OR 2 STRAIGHT BOLTS OR EQUIVALENT AS DETERMINED BY THE ENGINEER.
   - 1.7. UNIT SHALL BE ON THE MnDOT PRE APPROVED PRODUCTS LIST

2. UNIT SHALL BE INSTALLED TO MANUFACTURERS SPECIFICATIONS

3. CONCRETE FOOTING FOR SIGN BASE IS REQUIRED AND SHALL BE A MINIMUM OF 12" IN DIAMETER AND 12" IN DEPTH. CONCRETE FOOTING SHALL BE INCIDENTAL. SEE "DETAIL A".

4. IF CORING IS REQUIRED FOR SIGN PLACEMENT, THE CORING AND CONCRETE SHALL BE INCIDENTAL.

5. UNIT PLACEMENT MAY DEPEND ON SIZE OF SIGN, SEE "DETAIL B" AND MN MUTCD FOR GUIDANCE.

6. A 1¾" X 1¾" GALVANIZED STEEL TUBING, 12 GAUGE WITH 7/16" HOLES SPACED 1" APART ON ALL SIDES (TELSPAR), 36" IN LENGTH SHALL BE SUPPLIED AND INSERTED INTO THE SIGN POST FOR ADDED STABILITY. SEE "DETAIL A"

7. A SLIP BASE UNIT MAY BE SUBSTITUTED UPON ENGINEERS APPROVAL. CONTRACTOR SHALL SUPPLY PRODUCT SPECIFICATIONS AND INFORMATION TO THE ENGINEER FOR REVIEW PRIOR TO APPROVAL.

GROUND INSTALLATION

1. ALL SIGNS INSTALLED IN GROUND SHALL CONSIST OF A BREAK AWAY UNIT
   - 1.1. UNIT SHALL BE STEM BASE MOUNT ATTACHED TO A SOIL ANCHOR THAT IS 4' IN DEPTH AND INCORPORATES A SOIL SPADE DRIVEN WITHIN 1" TO 2" ABOVE GRADE. SEE "DETAIL C"
   - 1.2. UNIT SHALL HAVE A STUB HEIGHT LESS THAN 4" AFTER BREAK AWAY.

2. UNIT SHALL BE INSTALLED TO MANUFACTURERS SPECIFICATIONS

3. UNIT PLACEMENT MAY DEPEND ON SIZE AND TYPE OF SIGN, SEE "DETAIL B" AND MN MUTCD FOR GUIDANCE.

4. A SLIP BASE UNIT MAY BE SUBSTITUTED UPON ENGINEERS APPROVAL. CONTRACTOR SHALL SUPPLY PRODUCT SPECIFICATIONS AND INFORMATION TO THE ENGINEER FOR REVIEW PRIOR TO APPROVAL.

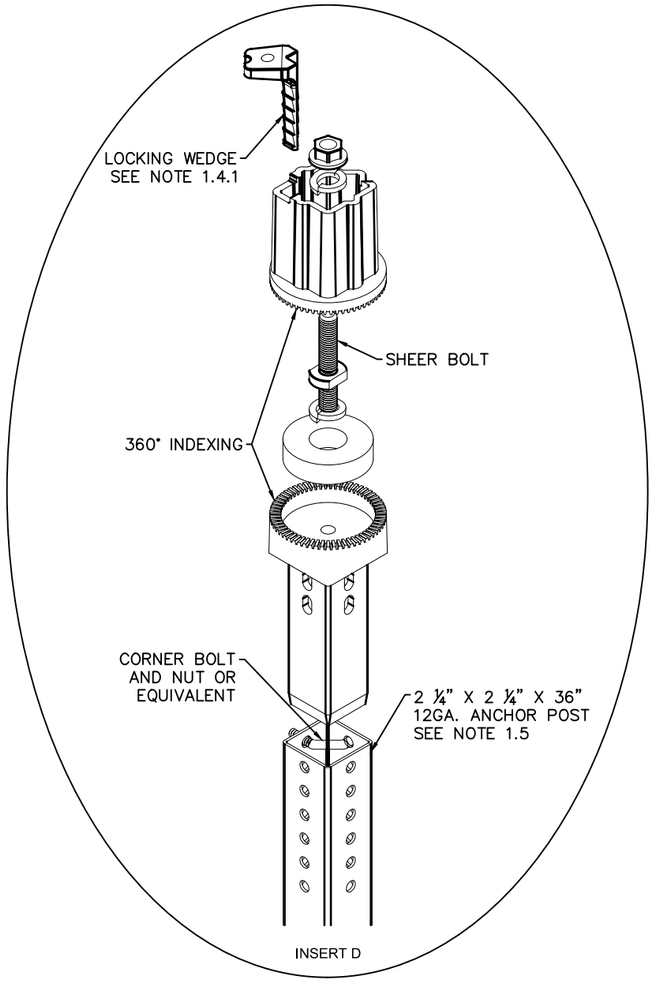

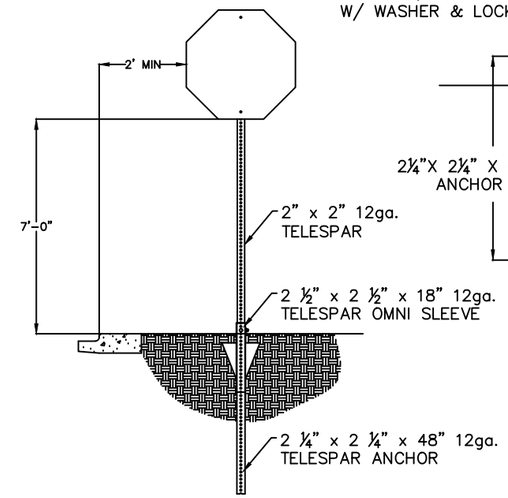

"DETAIL C"

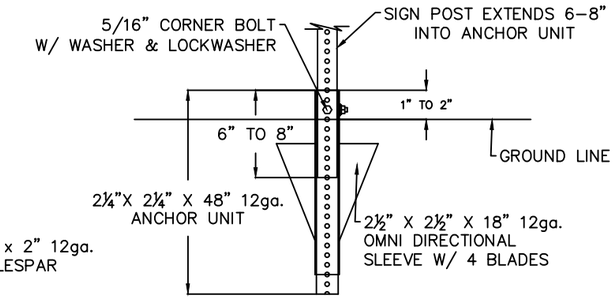

OMNI DIRECTIONAL SLEEVE
TOP VIEW

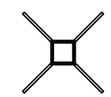

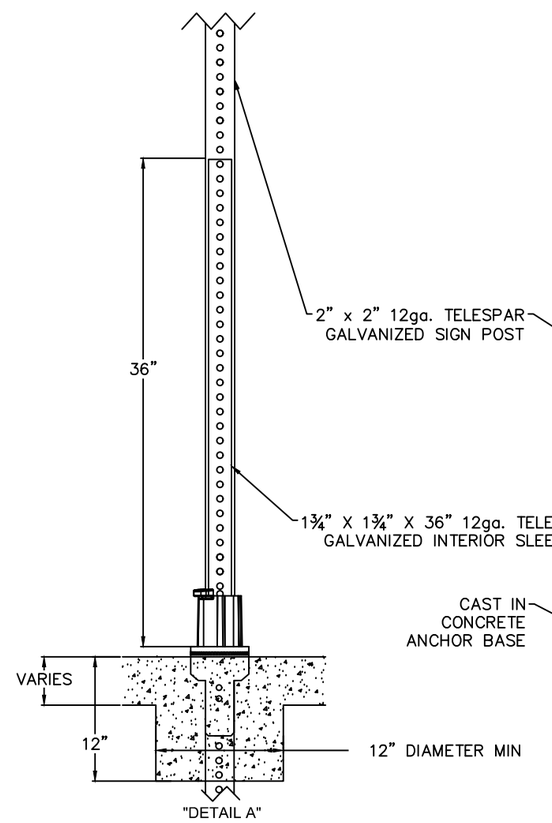

"DETAIL A"

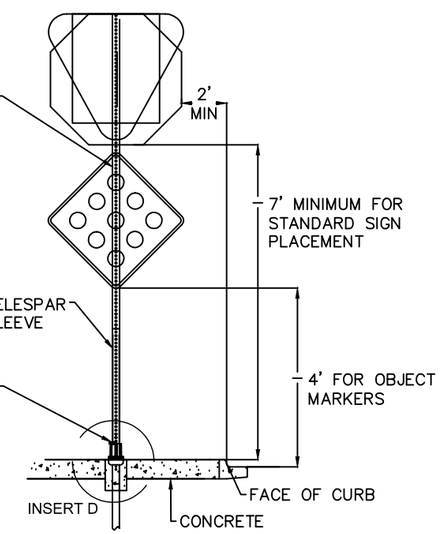

"DETAIL B"

NO	DATE	DWN	CKD	REVISIONS

ALLIANT

I HEREBY CERTIFY THAT THIS SHEET WAS PREPARED BY ME OR UNDER MY DIRECT SUPERVISION AND THAT I AM A DULY LICENSED PROFESSIONAL ENGINEER UNDER THE LAWS OF THE STATE OF MINNESOTA.

PRINT NAME: SEAN M. JOHNSTON
SIGNATURE:
DATE XX/XX/2020 LICENSE # 52701

SIGNING AND PAVEMENT MARKINGS PLAN
SIGNING DETAILS

RAMSEY COUNTY
WHITE BEAR AVENUE (CSAH 65) & GERVAIS AVENUE IMPROVEMENTS

1:29:06 PM
4/23/2020
c:\pw_working\projectwise\alliant\d0135718\cd200052-spm.dwg

EXISTING

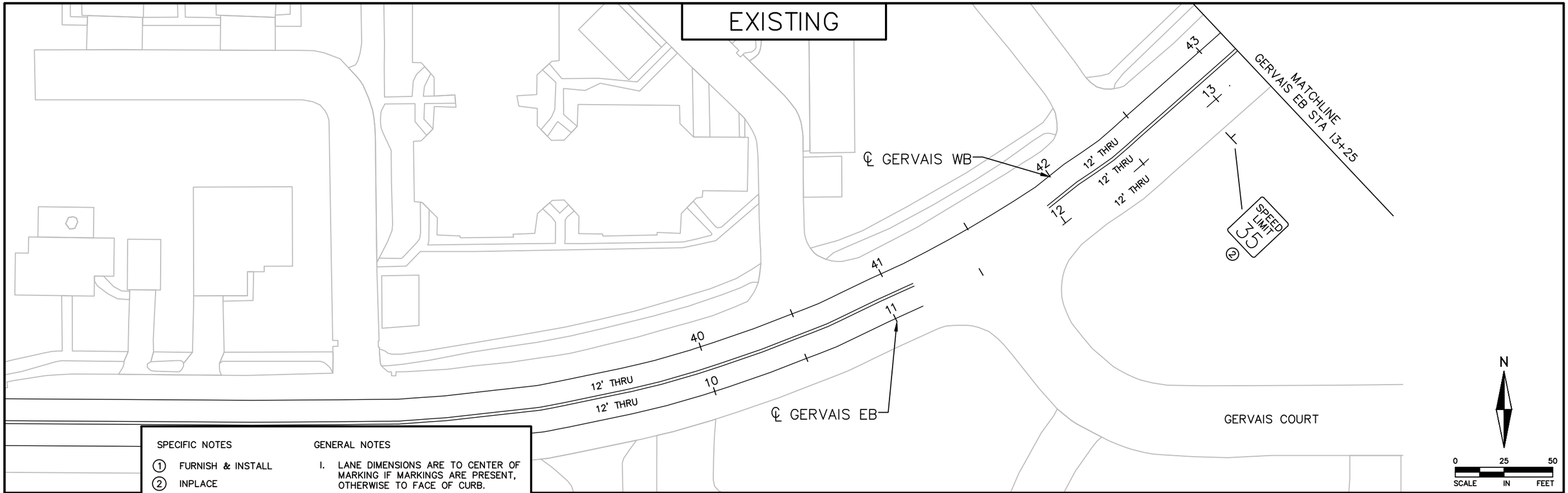

SPECIFIC NOTES

① FURNISH & INSTALL
② INPLACE
⑤ REMOVE SIGN TYPE C

GENERAL NOTES

1. LANE DIMENSIONS ARE TO CENTER OF MARKING IF MARKINGS ARE PRESENT, OTHERWISE TO FACE OF CURB.
2. SEE SHEET 45 FOR PAVEMENT MARKING LEGEND.
3. CONTRACTOR SHALL REMOVE ALL CONFLICTING PAVEMENT MARKINGS.

PROPOSED

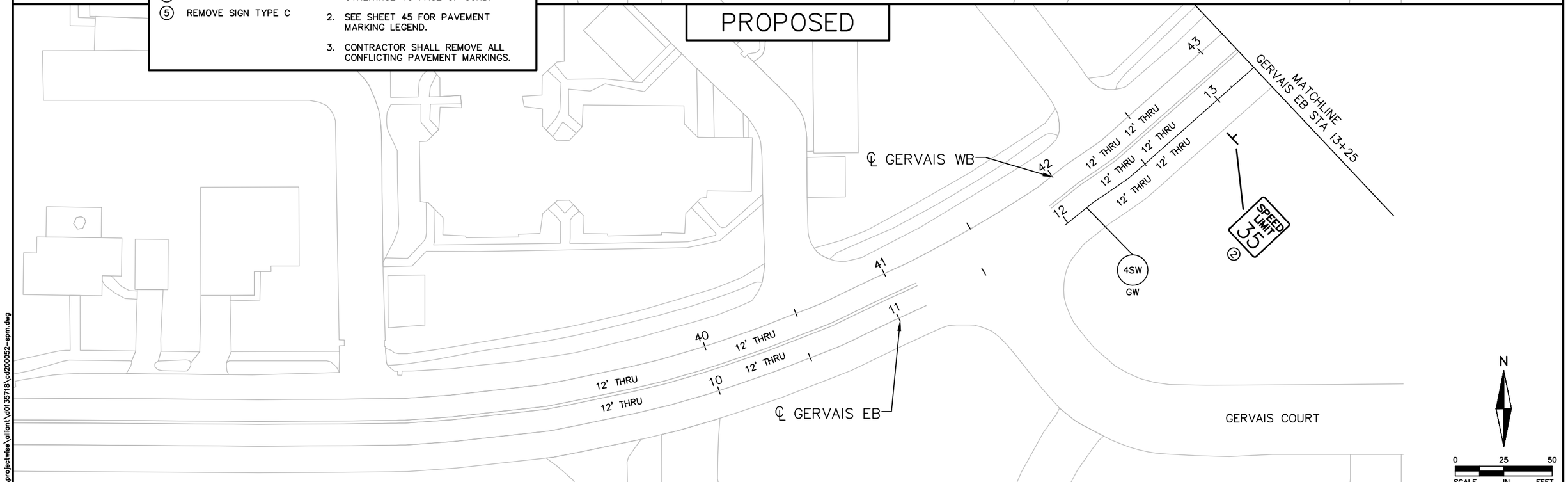

1:28:09 PM
4/23/2020
c:\pw_working\projectwise\alliant\d0135718\cd200052-spm.dwg

NO	DATE	DWN	CKD	REVISIONS

ALLIANT

I HEREBY CERTIFY THAT THIS SHEET WAS PREPARED BY ME OR UNDER MY DIRECT SUPERVISION AND THAT I AM A DULY LICENSED PROFESSIONAL ENGINEER UNDER THE LAWS OF THE STATE OF MINNESOTA.

PRINT NAME: SEAN M. JOHNSTON
SIGNATURE:
DATE XX/XX/2020 LICENSE # 52701

SIGNING AND PAVEMENT MARKINGS PLAN
GERVAIS EB – BEGIN PROJECT TO STA 13+25

RAMSEY COUNTY
WHITE BEAR AVENUE (CSAH 65) & GERVAIS AVENUE IMPROVEMENTS

EXISTING

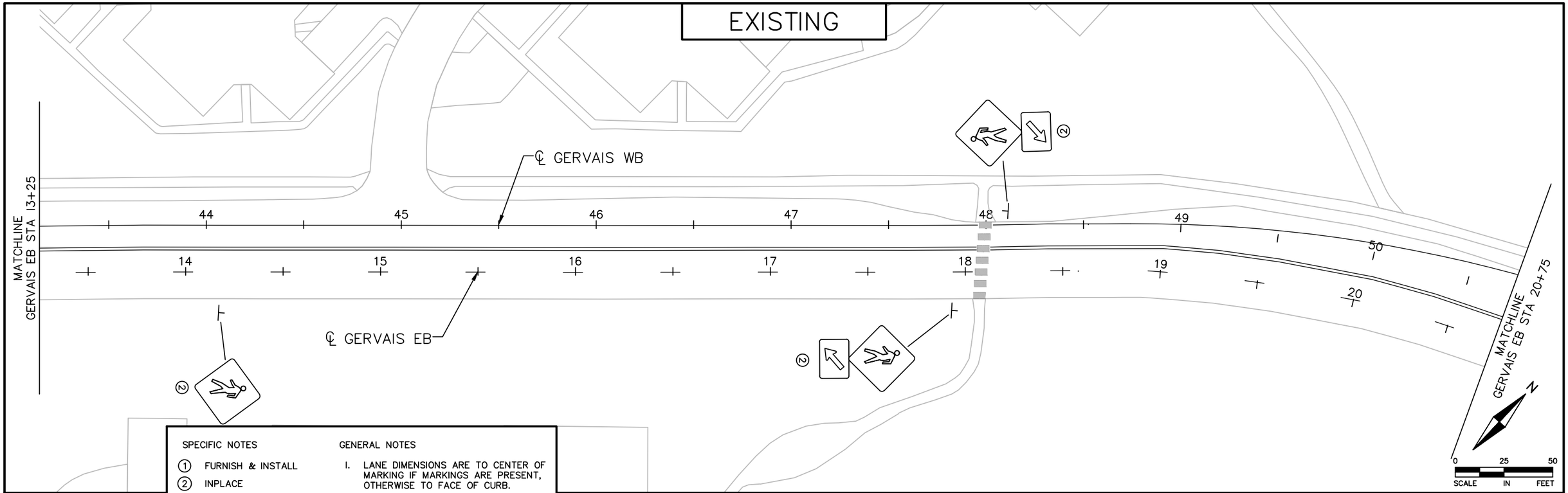

SPECIFIC NOTES

1. FURNISH & INSTALL
2. INPLACE
5. REMOVE SIGN TYPE C

GENERAL NOTES

1. LANE DIMENSIONS ARE TO CENTER OF MARKING IF MARKINGS ARE PRESENT, OTHERWISE TO FACE OF CURB.
2. SEE SHEET 45 FOR PAVEMENT MARKING LEGEND.
3. CONTRACTOR SHALL REMOVE ALL CONFLICTING PAVEMENT MARKINGS.

PROPOSED

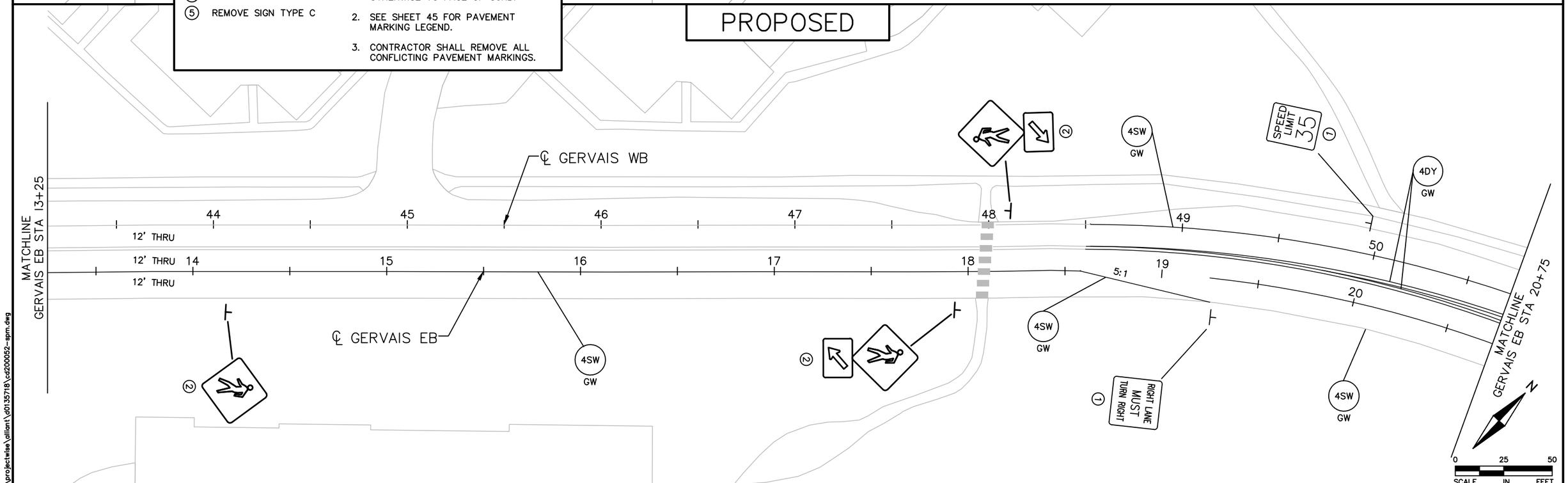

NO	DATE	DWN	CKD	REVISIONS

ALLIANT

I HEREBY CERTIFY THAT THIS SHEET WAS PREPARED BY ME OR UNDER MY DIRECT SUPERVISION AND THAT I AM A DULY LICENSED PROFESSIONAL ENGINEER UNDER THE LAWS OF THE STATE OF MINNESOTA.

PRINT NAME: SEAN M. JOHNSTON

SIGNATURE:

DATE XX/XX/2020 LICENSE # 52701

SIGNING AND PAVEMENT MARKINGS PLAN

GERVAIS EB – STA 13+25 TO STA 20+75

RAMSEY COUNTY
WHITE BEAR AVENUE (CSAH 65) & GERVAIS AVENUE IMPROVEMENTS

1:28:13 PM
4/23/2020
c:\pw_working\projectwise\alliant\d0135718\cd200052-spm.dwg

EXISTING

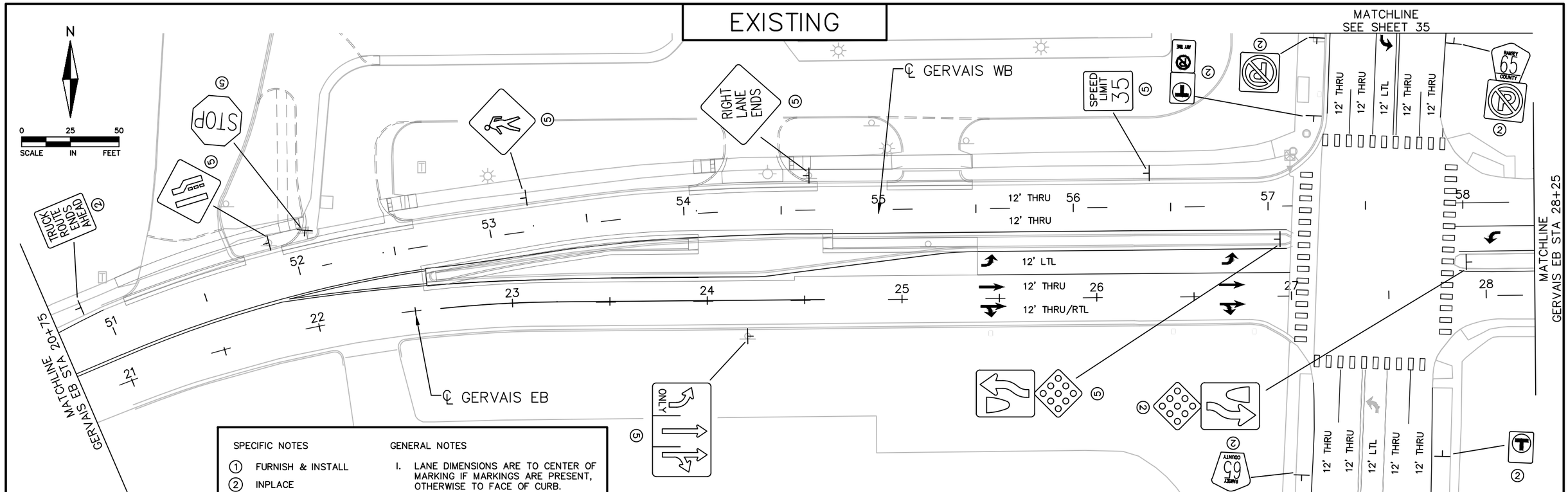

SPECIFIC NOTES

1. FURNISH & INSTALL
2. INPLACE
5. REMOVE SIGN TYPE C

GENERAL NOTES

1. LANE DIMENSIONS ARE TO CENTER OF MARKING IF MARKINGS ARE PRESENT, OTHERWISE TO FACE OF CURB.
2. SEE SHEET 45 FOR PAVEMENT MARKING LEGEND.
3. CONTRACTOR SHALL REMOVE ALL CONFLICTING PAVEMENT MARKINGS.

PROPOSED

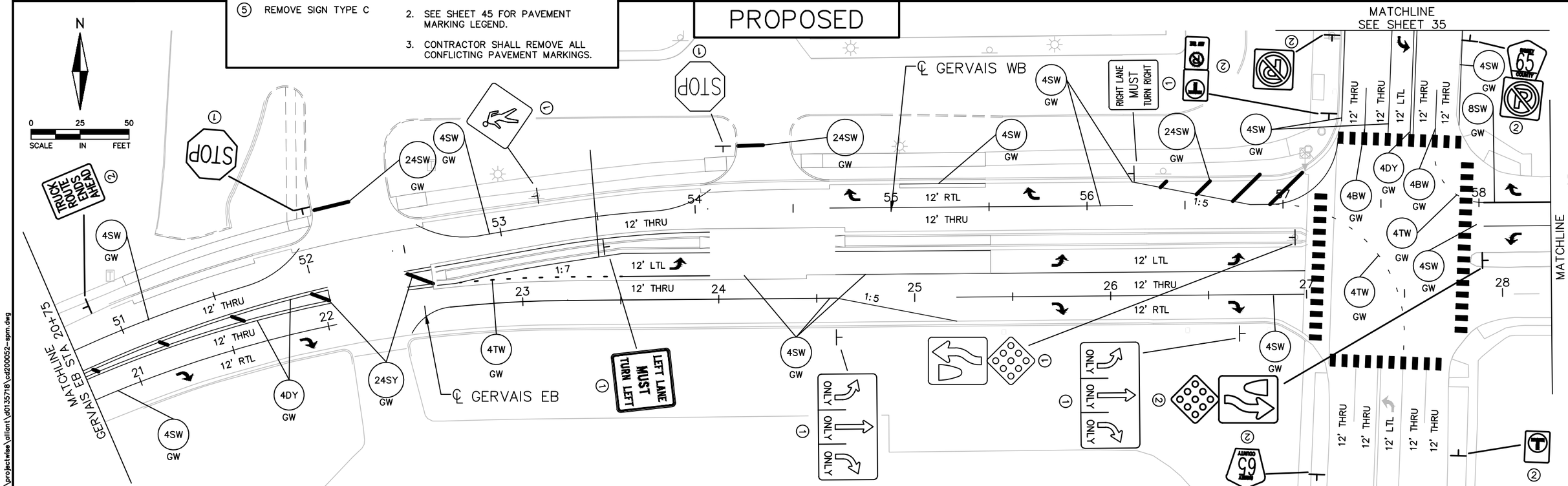

NO	DATE	DWN	CKD	REVISIONS

ALLIANT

I HEREBY CERTIFY THAT THIS SHEET WAS PREPARED BY ME OR UNDER MY DIRECT SUPERVISION AND THAT I AM A DULY LICENSED PROFESSIONAL ENGINEER UNDER THE LAWS OF THE STATE OF MINNESOTA.

PRINT NAME: SEAN M. JOHNSTON

SIGNATURE:

DATE XX/XX/2020 LICENSE # 52701

SIGNING AND PAVEMENT MARKINGS PLAN

GERVAIS EB – STA 20+75 TO STA 28+25

RAMSEY COUNTY
WHITE BEAR AVENUE (CSAH 65) & GERVAIS AVENUE IMPROVEMENTS

SHEET NO. 35 OF 51 SHEETS

1:29:16 PM
4/23/2020
c:\pw_working\projectwise\alliant\d0135718\cd200052-spm.dwg

EXISTING

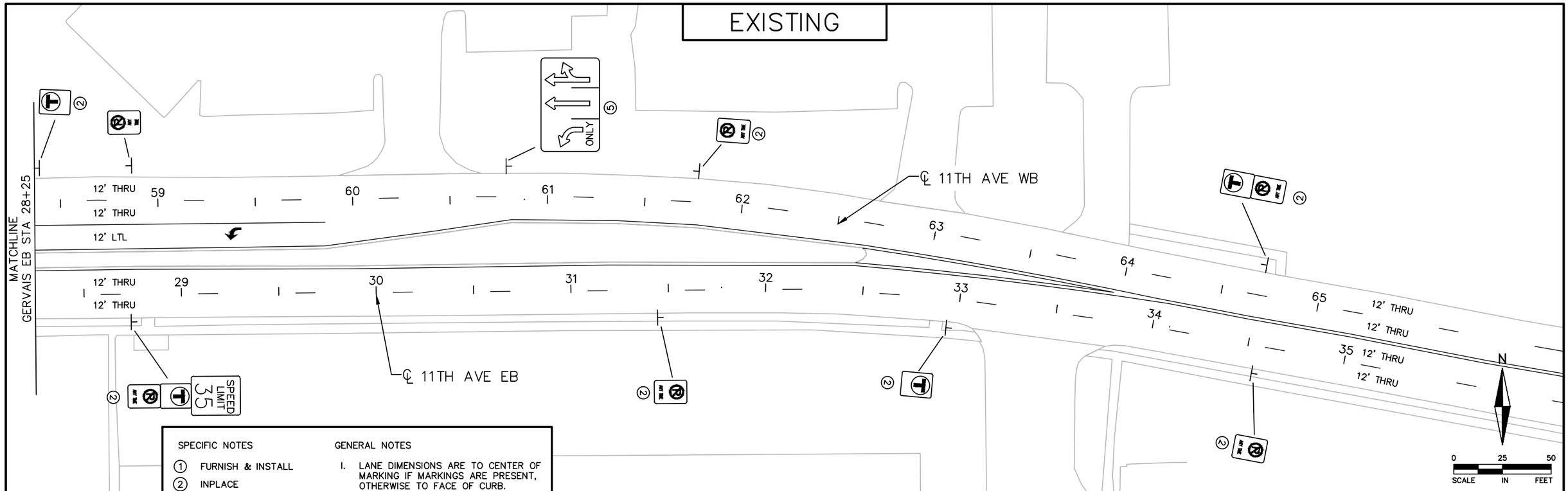

SPECIFIC NOTES

1. FURNISH & INSTALL
2. INPLACE
5. REMOVE SIGN TYPE C

GENERAL NOTES

1. LANE DIMENSIONS ARE TO CENTER OF MARKING IF MARKINGS ARE PRESENT, OTHERWISE TO FACE OF CURB.
2. SEE SHEET 45 FOR PAVEMENT MARKING LEGEND.
3. CONTRACTOR SHALL REMOVE ALL CONFLICTING PAVEMENT MARKINGS.

PROPOSED

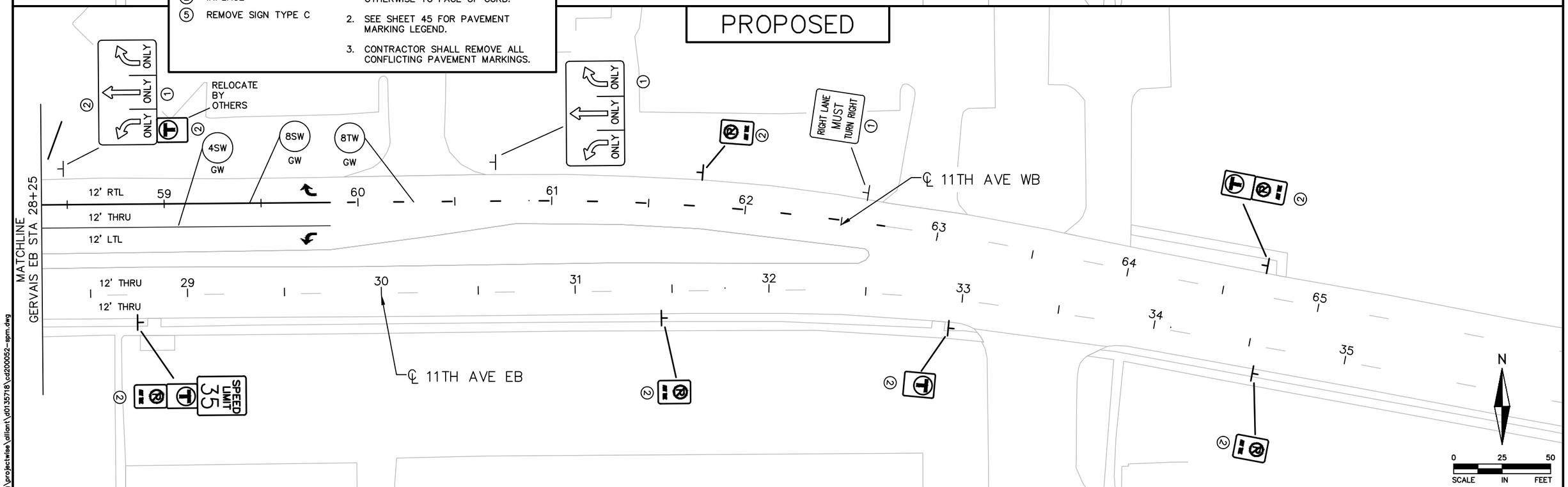

NO	DATE	DWN	CKD	REVISIONS

ALLIANT

I HEREBY CERTIFY THAT THIS SHEET WAS PREPARED BY ME OR UNDER MY DIRECT SUPERVISION AND THAT I AM A DULY LICENSED PROFESSIONAL ENGINEER UNDER THE LAWS OF THE STATE OF MINNESOTA.

PRINT NAME: SEAN M. JOHNSTON

SIGNATURE:

DATE XX/XX/2020 LICENSE # 52701

SIGNING AND PAVEMENT MARKINGS PLAN

GERVAIS EB – STA 28+25 TO END PROJECT

RAMSEY COUNTY
WHITE BEAR AVENUE (CSAH 65) & GERVAIS AVENUE IMPROVEMENTS

1:29:20 PM
4/23/2020
c:\pw_working\projectwise\alliant\d0135718\cd200052-spm.dwg

EXISTING

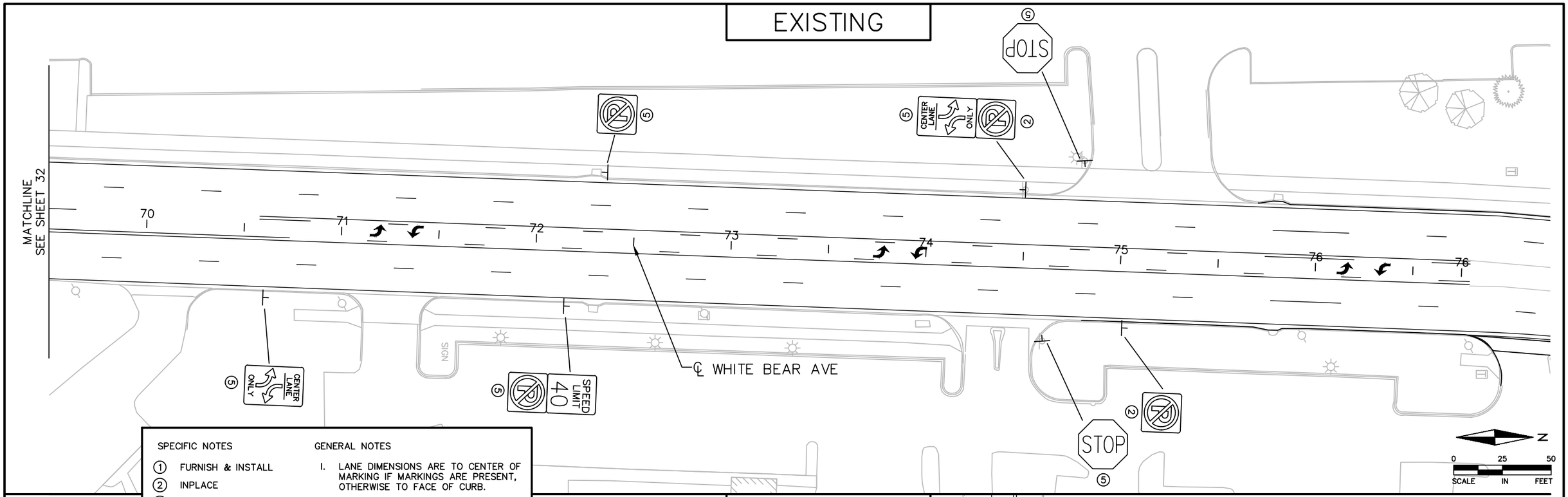

SPECIFIC NOTES

1. FURNISH & INSTALL
2. INPLACE
5. REMOVE SIGN TYPE C

GENERAL NOTES

1. LANE DIMENSIONS ARE TO CENTER OF MARKING IF MARKINGS ARE PRESENT, OTHERWISE TO FACE OF CURB.
2. SEE SHEET 45 FOR PAVEMENT MARKING LEGEND.
3. CONTRACTOR SHALL REMOVE ALL CONFLICTING PAVEMENT MARKINGS.

PROPOSED

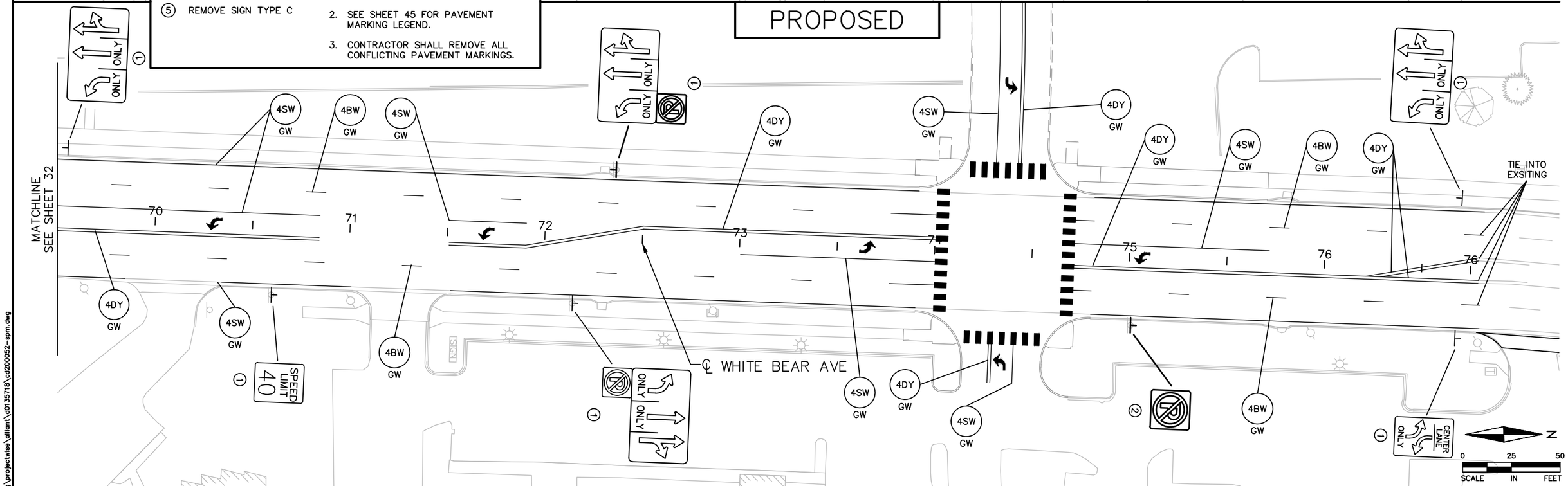

NO	DATE	DWN	CKD	REVISIONS

ALLIANT

I HEREBY CERTIFY THAT THIS SHEET WAS PREPARED BY ME OR UNDER MY DIRECT SUPERVISION AND THAT I AM A DULY LICENSED PROFESSIONAL ENGINEER UNDER THE LAWS OF THE STATE OF MINNESOTA.

PRINT NAME: SEAN M. JOHNSTON

SIGNATURE:

DATE XX/XX/2020 LICENSE # 52701

SIGNING AND PAVEMENT MARKINGS PLAN

WHITE BEAR AVENUE

RAMSEY COUNTY

WHITE BEAR AVENUE (CSAH 65) & GERVAIS AVENUE IMPROVEMENTS

SHEET NO. 37 OF 51 SHEETS

1:28:23 PM
4/23/2020
c:\pw_working\projectwise\alliant\d0135718\cd200052-spm.dwg

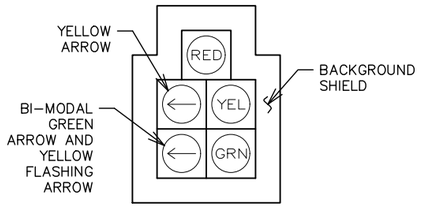

5 SECTION FYA CLUSTER HEAD DETAIL

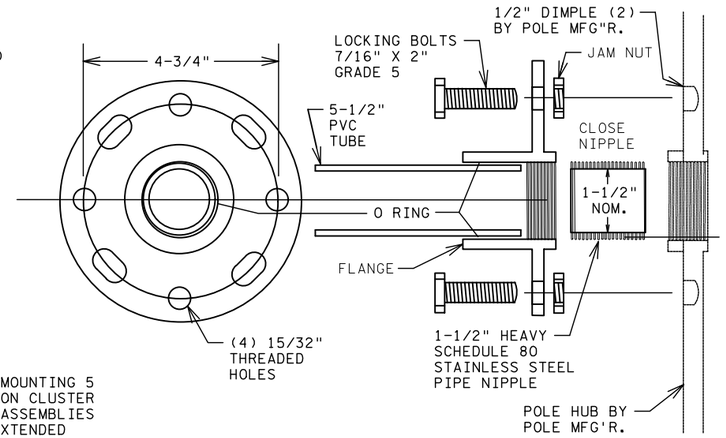

THREADED HUB AND FLANGE POLE ADAPTOR

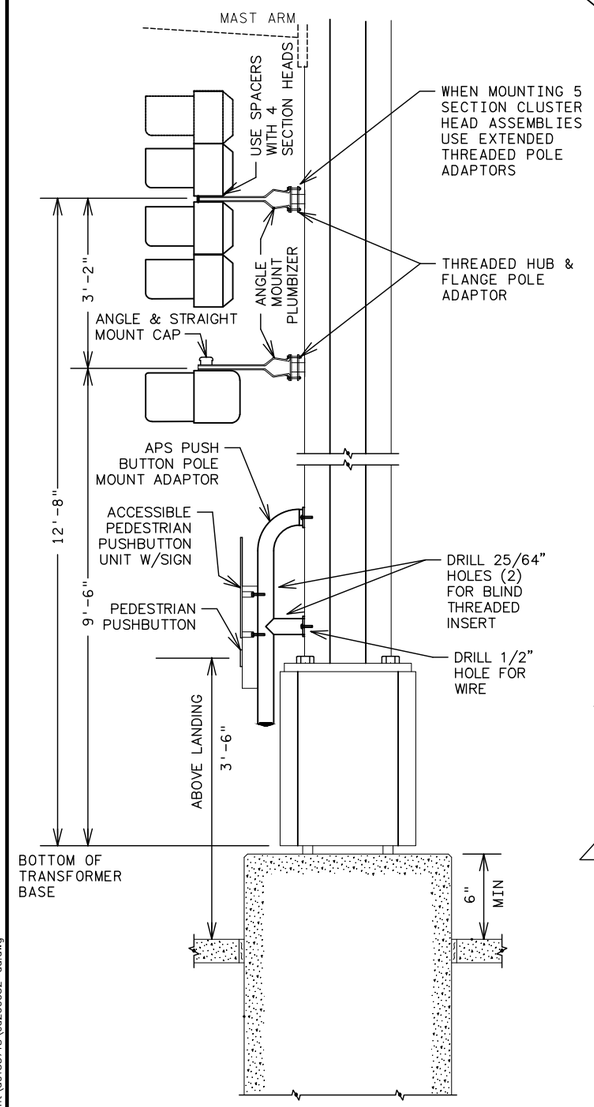

TYPICAL SIGNAL POLE MOUNTING

NOT TO SCALE

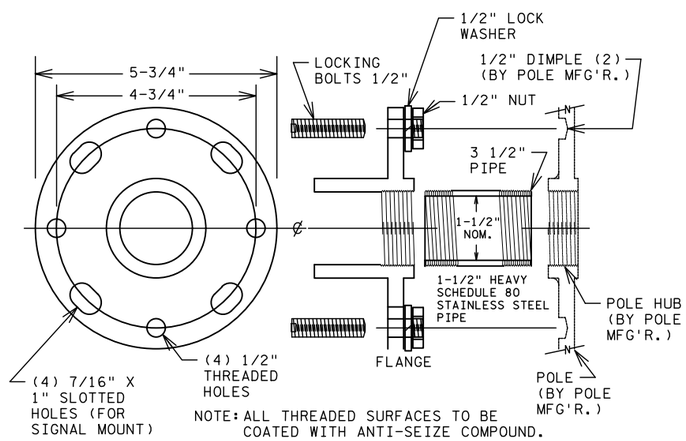

NOTE: ALL THREADED SURFACES TO BE COATED WITH ANTI-SEIZE COMPOUND.

EXTENDED THREADED POLE ADAPTER

NOTES:
1. ALL THREADED SURFACES TO BE COATED WITH ANTI-SEIZE COMPOUND.
2. USE SIGNAL HEAD MOUNTED SPACERS FOR 4 SECTION POLY HEADS.
3. SEE STANDARD PLATE NUMBER 8123 FOR ADDITIONAL SIGNAL POLE DETAILS.
4. EXTENDED THREADED POLE ADAPTOR ONLY USED WITH 5 SECTION CLUSTER HEADS.

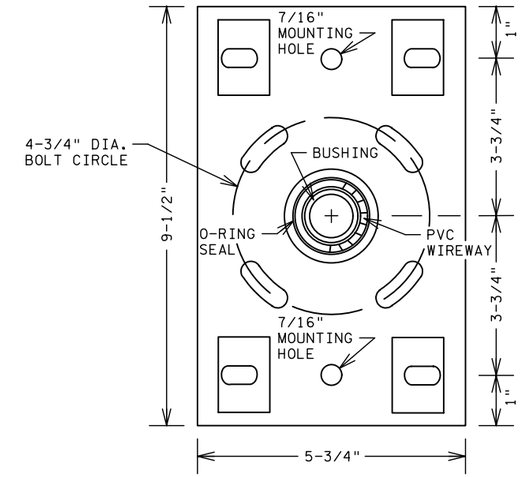

BOLT ON HUB & FLANGE

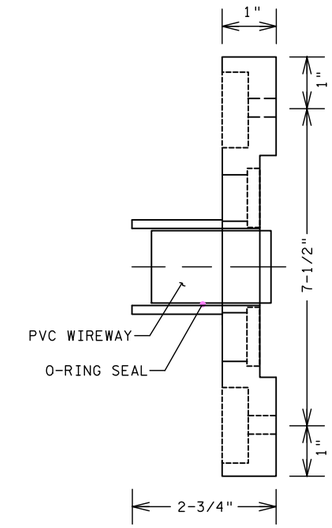

SIDE VIEW

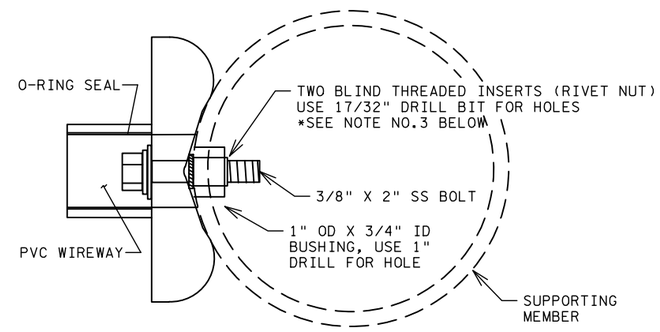

TOP VIEW

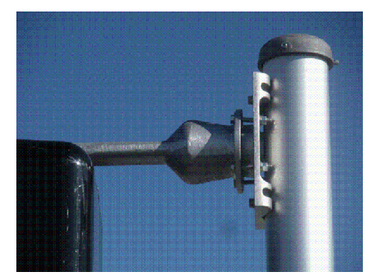

NOTES:
1. ALL THREADED SURFACES TO BE COATED WITH ANTI-SEIZE COMPOUND.
2. USE SIGNAL HEAD MOUNTED SPACERS FOR 4 SECTION POLY HEADS.
3. BLIND THREADED INSERTS (RIVET NUT) MUST BE INSERTED USING MANUFACTURERS SPECIFIC INSERTION TOOL. NO OTHER METHOD IS ACCEPTABLE.
4. SEE STANDARD PLATE NUMBER 8122 FOR ADDITIONAL PEDESTAL POLE DETAILS.

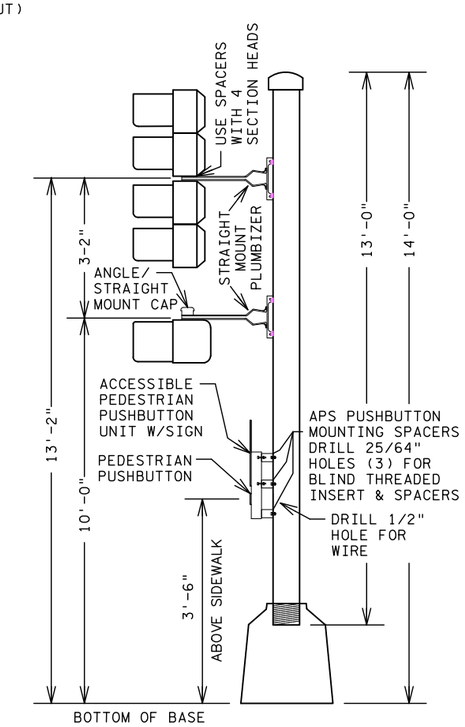

TYPICAL PEDESTAL MOUNTING

NOT TO SCALE

NO	DATE	DWN	CKD	REVISIONS

ALLIANT

I HEREBY CERTIFY THAT THIS SHEET WAS PREPARED BY ME OR UNDER MY DIRECT SUPERVISION AND THAT I AM A DULY LICENSED PROFESSIONAL ENGINEER UNDER THE LAWS OF THE STATE OF MINNESOTA.

PRINT NAME: MICHAEL P. MCCURDY
SIGNATURE:
DATE XX/XX/2020 LICENSE # 45902

POLE MOUNT DETAIL

RAMSEY COUNTY
WHITE BEAR AVENUE (CSAH 65) & GERVAIS AVENUE IMPROVEMENTS

SHEET NO. 38 OF 51 SHEETS

1:29:28 PM
4/23/2020
c:\pw_working\projectwise\alliant\d0135718\cd200052-dd.dwg

APS PUSH BUTTON STATION

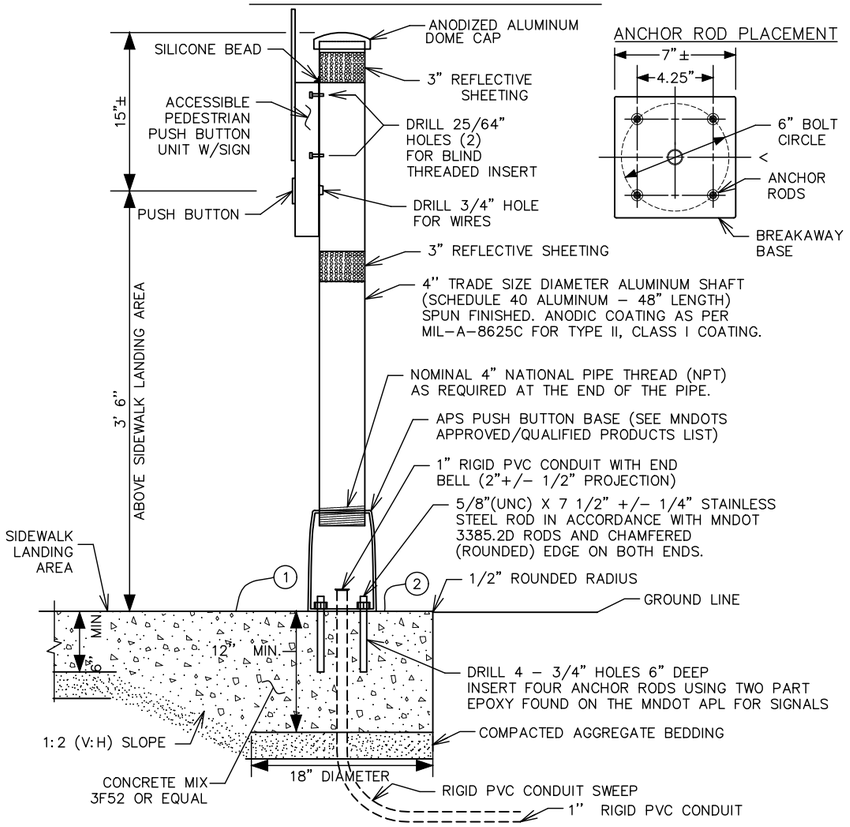

ANCHOR ROD PLACEMENT

NOTES:

PLACEMENT AND ORIENTATION OF THE PUSH BUTTON STATION IS CRITICAL. MOUNT THE BUTTON SO THAT THE FACE IS PARALLEL WITH THE ASSOCIATED CROSSWALK. SCREW IN SHAFT TO A TIGHTENED POSITION BEFORE MOUNTING ACCESSIBLE PEDESTRIAN PUSH BUTTON UNIT TO THE SHAFT.

ORIENT ACCESS OPENING ON THE BREAKAWAY PEDESTAL DIRECTLY BELOW THE APS BUTTON.

PLUMB THE PUSH BUTTON STATION WITH LEVELING SHIMS IN ACCORDANCE WITH STANDARD PLATE 8129.

INSTALL BLIND THREADED INSERTS USING MANUFACTURER'S SPECIFIC INSERTION TOOL.

USE ZINC PLATED STEEL 1/4 – 20 UNC BLIND THREADED INSERTS SUITABLE FOR MOUNTING ON SURFACE WALL THICKNESS OF .337. APPROVED BLIND INSERTS ARE LISTED ON MNDOT'S APPROVED/QUALITY PRODUCTS LIST WEBSITE FOR TRAFFIC SIGNALS.

USE APS 1/4 – 20 STAINLESS STEEL MOUNTING BOLTS. APPLY BRUSH ON ANTI SEIZE COMPOUND TO BOLTS PRIOR TO ASSEMBLY.

APPLY A BEAD OF 100% SILICONE SEALANT ALONG THE TOP OF THE PUSH BUTTON UNIT WHERE IT COMES IN CONTACT WITH THE 4" SHAFT.

USE WHITE REFLECTIVE SHEETING AT INTERSECTION CORNERS AND YELLOW REFLECTIVE SHEETING IN CENTER MEDIANS. APPROVED TUBE DELINEATOR SHEETING IS LISTED ON MNDOT'S APPROVED/QUALIFIED PRODUCTS LIST WEBSITE FOR SIGNING.

AN 18" X 6" FIBER FORMING TUBE MAY BE USED FOR THE LOWER HALF OF THE FOUNDATION WHEN CONDITIONS DO NOT ALLOW FOR THE 18" X 6" HOLE TO STAND OPEN.

(1) THE PUSH BUTTON STATION FOUNDATION IS MONOLITHIC (POURED AT ONE TIME) WITH THE SIDEWALK. PROVIDE A 1:2 (V:H) SLOPE GRADE WHERE THE 6" MIN SIDEWALK DEPTH TRANSITIONS TO THE 12" MIN FOUNDATION DEPTH. MAINTAIN THE COMPACTED AGGREGATE BEDDING AND THICKNESS USED FOR THE SIDEWALK THROUGHOUT THE SLOPE AND FOUNDATION GRADING. PROVIDE 1:2 (V:H) SLOPE GRADING 360 DEGREES FOR THE TRANSITION FROM THE SIDEWALK TO THE FOUNDATION WHEN THE FOUNDATION IS NOT LOCATED NEAR EDGE OF SIDEWALK AND IS SURROUNDED BY CONCRETE WALK.

(2) ENSURE CONCRETE CONTROL JOINTS AND EDGE OF CONCRETE WALK ARE A MINIMUM 9" FROM THE CENTER OF THE PUSH BUTTON FOUNDATION.

TYPICAL APS PEDESTRIAN PUSH BUTTON LOCATION

THIS IS A GENERAL DETAIL INTENDED TO SHOW THE REQUIREMENTS OF APS PUSH BUTTON LOCATION. FOR PROJECT SPECIFIC INFORMATION REGARDING PEDESTRIAN RAMP LAYOUT AND PUSH BUTTON LOCATIONS, SEE THE PLAN.

SUPPLEMENTAL GUIDANCE FOR CONSTRUCTING COMPLIANT APS PUSH BUTTONS:

(1) THE FACE OF THE BUTTON SHALL BE PARALLEL WITH THE OUTSIDE EDGE OF CROSSWALK.

(2) A MINIMUM 4 FT X 4 FT LANDING AREA SHALL BE PROVIDED ADJACENT TO EACH BUTTON, WITH A 2 PERCENT MAXIMUM SLOPE IN ALL DIRECTIONS.

(3) BUTTONS SHALL BE WITHIN 5 FT OF THE OUTSIDE EDGE OF THE CROSSWALK.

(4) BUTTONS SHALL BE BETWEEN 1.5 FT AND 10 FT FROM THE BACK OF CURB OR EDGE OF ROADWAY, MEASURED IN THE DIRECTION OF TRAVEL. STANDALONE PUSH BUTTON STATIONS SHOULD BE 4' MINIMUM FROM THE BACK OF CURB TO AVOID KNOCKDOWNS.

(5) BUTTONS SHALL BE AT LEAST 10 FT APART.

(6) PROVIDE A MAINTENANCE ACCESS ROUTE (MAR) WHEREVER POSSIBLE FOR SNOW REMOVAL PURPOSES. A MAR REQUIRES A 6 FT MINIMUM CLEAR DISTANCE BETWEEN A PUSH BUTTON AND ANY OBSTRUCTIONS,INCLUDING BUILDINGS, V-CURB, ELECTRICAL FOUNDATIONS, SIGNAL CABINETS, OR ANOTHER PUSH BUTTON.

(7) BUTTON SHOULD BE 2 FT MINIMUM FROM RAMP GRADE BREAK AND BACK OF WALK.

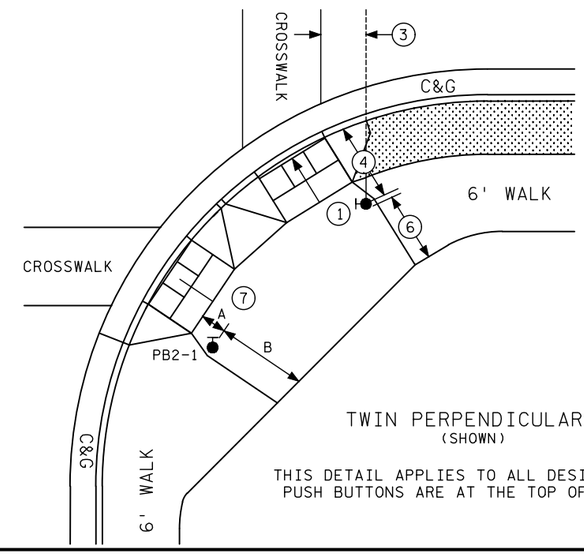

TWIN PERPENDICULARS
(SHOWN)

THIS DETAIL APPLIES TO ALL DESIGNS WHEN PUSH BUTTONS ARE AT THE TOP OF A RAMP

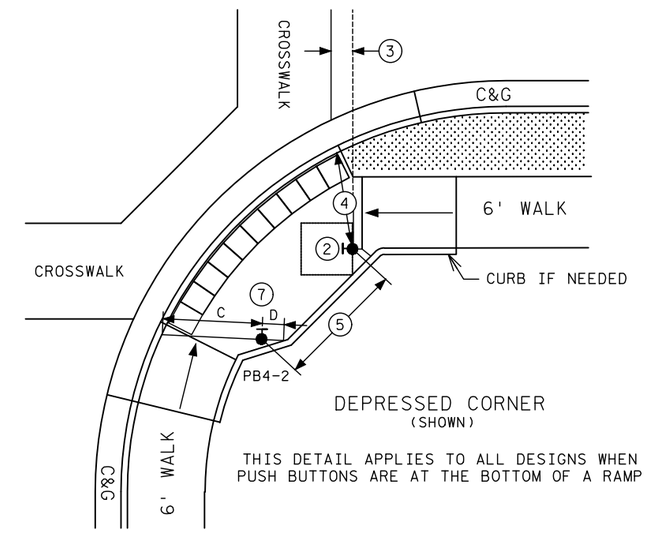

DEPRESSED CORNER
(SHOWN)

THIS DETAIL APPLIES TO ALL DESIGNS WHEN PUSH BUTTONS ARE AT THE BOTTOM OF A RAMP

CONTRACTOR MUST USE OPTION 1 OR 2 WHEN THE APS PUSH BUTTON IS SHOWN AT THE EDGE OF WALK. OPTION USED (OR SELECTED) MUST BE THE SAME THROUGHOUT THE ENTIRE PROJECT.

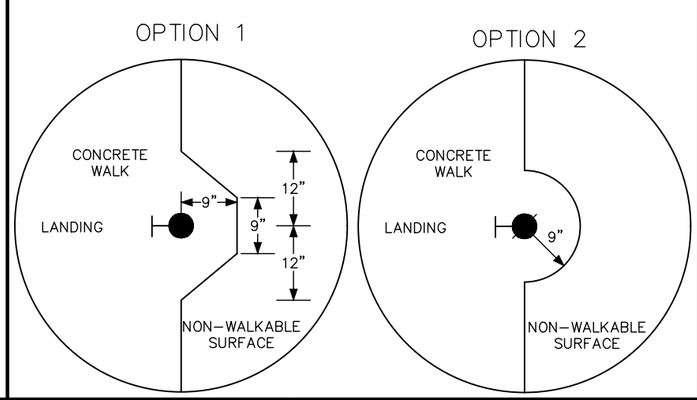

SIGNAL CONTROL POINTS			DISTANCE TO FRONT OF LANDING (FT)	DISTANCE TO BACK OF LANDING (FT)
SIGNAL NO.	X	Y		
PB2-1	–	–	A	B
PB4-2	–	–	C	D

A – DISTANCE MEASURED FROM THE PUSH BUTTON TO THE FRONT OF LANDING/TOP OF RAMP

B – CLEAR DISTANCE MEASURED FROM THE PUSH BUTTON TO THE BACK OF LANDING/EDGE OF WALK

C – CLEAR DISTANCE MEASURED FROM THE PUSH BUTTON TO THE OUTSIDE EDGE OF DOMES IN THE DIRECTION OF TRAVEL

D – CLEAR DISTANCE FROM THE PUSH BUTTON TO THE BACK OF LANDING MEASURED IN THE OPPOSITE DIRECTION OF TRAVEL

NO	DATE	DWN	CKD	REVISIONS

ALLIANT

I HEREBY CERTIFY THAT THIS SHEET WAS PREPARED BY ME OR UNDER MY DIRECT SUPERVISION AND THAT I AM A DULY LICENSED PROFESSIONAL ENGINEER UNDER THE LAWS OF THE STATE OF MINNESOTA.

PRINT NAME: MICHAEL P. MCCURDY
SIGNATURE:
DATE XX/XX/2020 LICENSE # 45902

APS PED BUSHBUTTON DETAIL

RAMSEY COUNTY
WHITE BEAR AVENUE (CSAH 65) & GERVAIS AVENUE IMPROVEMENTS

1:29:29 PM
4/23/2020
c:\pw_working\projectwise\alliant\d0135718\cd200052-dd.dwg

4-POSITION CONNECTOR

(BACK VIEW)

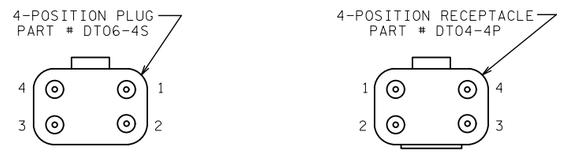

(FRONT VIEW)

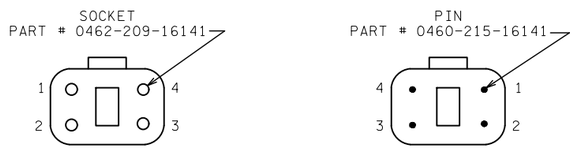

6-POSITION CONNECTOR

(BACK VIEW)

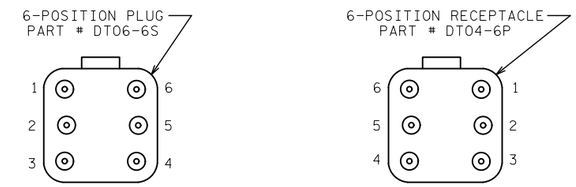

(FRONT VIEW)

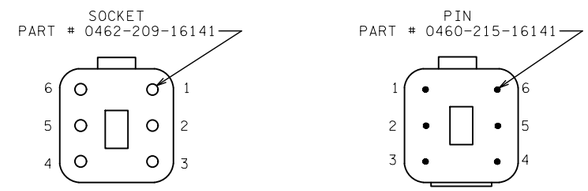

CONDUCTOR COLOR CODE (14 GAUGE)

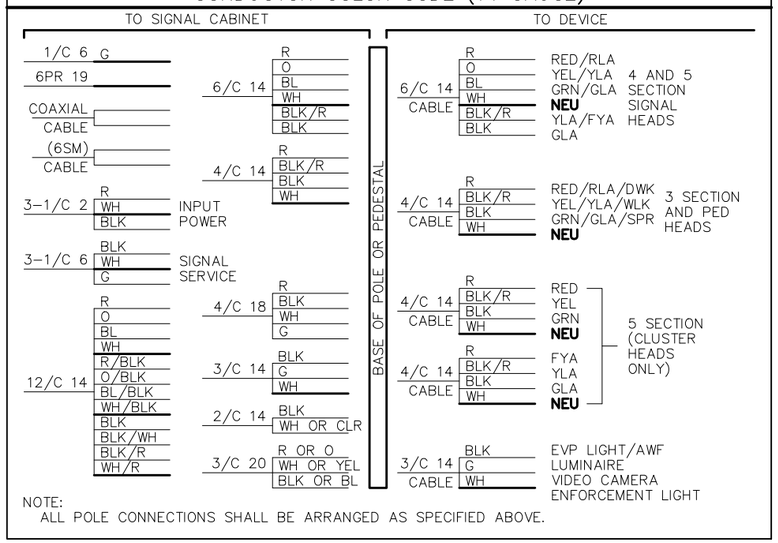

NOTE:
ALL POLE CONNECTIONS SHALL BE ARRANGED AS SPECIFIED ABOVE.

4 Position DT Connector (3 Section Head/DWK/WLK)

Wire to Control Cabinet	Connector pin #	Wire to Signal Indication	Signal Indication
R or R/BLK or BLK	1	R	RED or DWK
O or O/BLK or BLK/WH or BLK	2	BLK/R	YEL or WLK
BL or BL/BLK or BLK/R or BLK	3	BLK	GRN or SPR
WH or WH/BLK or WH/R	4	WH	NEU

4 Position DT Connector (Used with 3 Conductor Cable Only) (EVP LHT/LUM/AWF/ VID CAM/ENF LHT)

Wire to Control Cabinet	Connector pin #	Wire to Signal Indication	Signal Indication
BLK	1	BLK	EVP LHT or LUM or RED or YEL or VID CAM or ENF LHT or AWF
(Not Used)	2	(Not Used)	(Not Used) (See Note #8)
G	3	G	EQ.G
WH	4	WH	NEU

4 Position DT Connectors

(Use Two Connectors for 5 Section FYA Cluster Heads)

12 Conductor Wire to Control Cabinet	Connector pin #	4 Conductor to Signal Indication	Signal Indication
R	1	R	RED
O	2	BLK/R	YEL
BL	3	BLK	GRN
WH	4	WH	NEU
R/BLK	1	R	FYA
O/BLK	2	BLK/R	YLA
BL/BLK	3	BLK	GLA
WH/BLK	4	WH	NEU

6 Position DT Connector (4 and 5 Section Heads)

Wire to Control Cabinet	Connector pin #	Wire to Signal Indication	Signal Indication
R	1	R	RED
O	2	O	YEL
BL	3	BL	GRN
WH	4	WH	NEU
O/BLK or BLK/R (6/C)	5	BLK/R	YLA or FYLA
BL/BLK or BLK (6/C)	6	BLK	GLA

WIRE COLOR CODE KEY

R	Red
O	Orange
BL	Blue
WH	White
BLK	Black
BRN	Brown
CL	Clear
G	Green
R/BLK	Red with Black Stripe
O/BLK	Orange with Black Stripe
BL/BLK	Blue with Black Stripe
WH/BLK	White with Black Stripe
WH/R	White with Red Stripe
BLK/WH	Black with White Stripe
BLK/R	Black with Red Stripe

WIRE SPECIFICATION CHART

Type	Name	Specification Number
1/C 2	Power Conductors	3815.2B.1
1/C 6	Power Conductors	3815.2B.1
1/C 6 INS.GR.	Grounding Conductors	3815.2B.5
2/C 14	Loop Detector Lead-In Cable	3815.2C.4
3/C 14	Signal Control Cable	3815.2C.3
4/C 14	Signal Control Cable	3815.2C.3
6/C 14	Signal Control Cable	3815.2C.3
12/C 14	Signal Control Cable	3815.2C.3
6PR 19	Telephone Cables Outdoor	3815.2C.6.b
3/C 20	EVP Detector Cable	3815.2C.5

NOTES:

1. DT04-P RECEPTACLE SHALL BE TERMINATED TO THE WIRING HARNESS RUNNING FROM THE BASE/JUNCTION BOX OF THE POLE TO SIGNAL INDICATIONS.
2. DT06-_S PLUG SHALL BE TERMINATED TO THE CABLES RUNNING FROM THE TRAFFIC SIGNAL CABINET TO THE BASE/JUNCTION BOX OF THE POLE.
3. THERE SHALL BE A MINIMUM OF 24 INCHES OF SLACK ON EACH CABLE IN EVERY POLE BASE /JUNCTION BOX.
4. STRIP A MAXIMUM OF 6 INCHES OF THE OUTER JACKET OF EACH SIGNAL CABLE.
5. STRIP .250 INCHES OF INSULATION FROM EACH INDIVIDUAL CONDUCTOR.
6. CRIMP PINS OR SOCKETS USING RATCHETING TYPE CRIMPING TOOL HDT-48-00. NO OTHER CRIMPING TOOL WILL BE ALLOWED.
7. WIRES MUST BE TERMINATED AS DETAILED IN TABLES DEPENDING ON WIRE COUNT.
8. ANY UNUSED PIN MUST HAVE A SEALING PLUG PLACED IN BOTH THE PLUG & RECEPTACLE (PART # 114017).
9. LABEL EACH HALF OF THE CONNECTOR (PLUG AND RECEPTACLE) WITH THE DEVICE DESIGNATION (AS INDICATED IN THE WIRING DIAGRAM) USING A PERMANENT BLACK MARKER.

TYPICAL PAD WITH CONTROLLER CABINET AND SERVICE CABINET

SEE INTERSECTION LAYOUT FOR CABLE INFORMATION (NOT TO SCALE)

PLAN VIEW

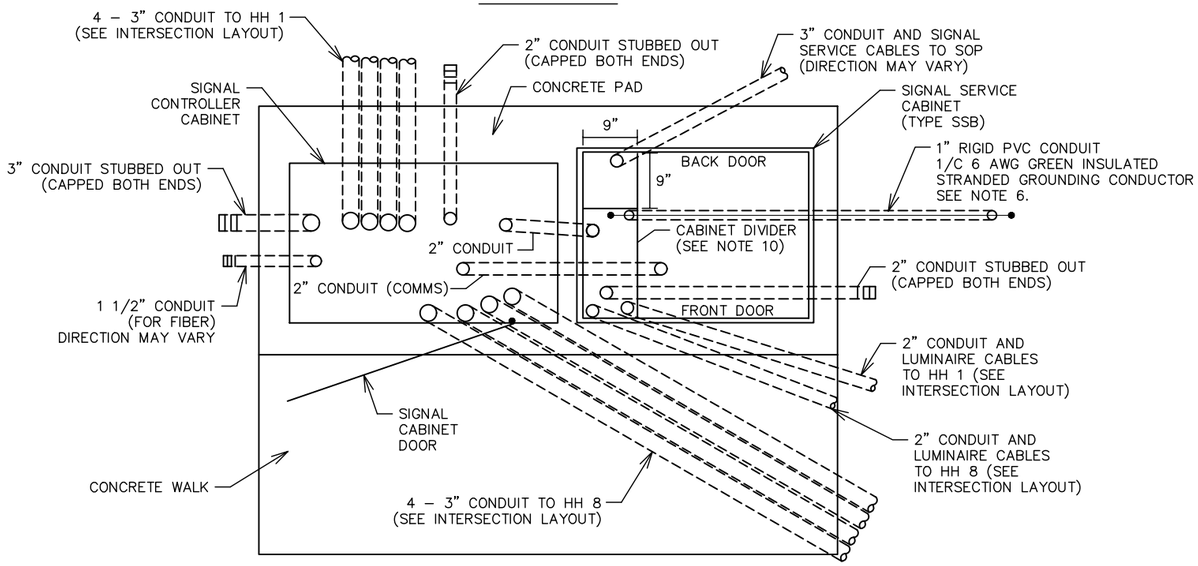

SIDE VIEW

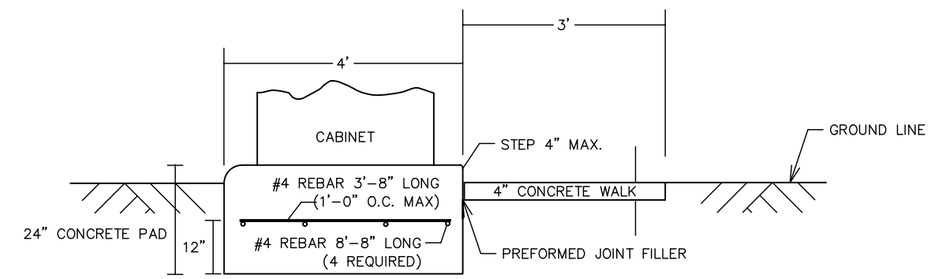

GROUNDING ELECTRODE SYSTEM

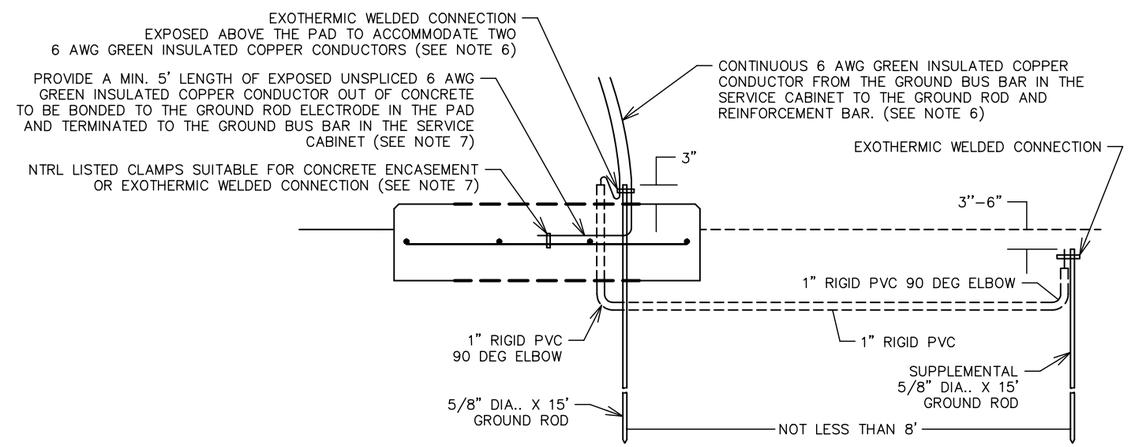

CONTROLLER CABINET TYPE "P" & "R" BOLT PATTERN

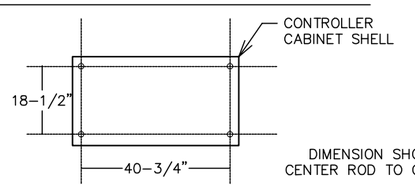

S.S.B. SERVICE CABINET BOLT PATTERN

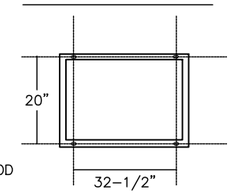

DIMENSION SHOWN ARE CENTER ROD TO CENTER ROD

FRONT VIEW

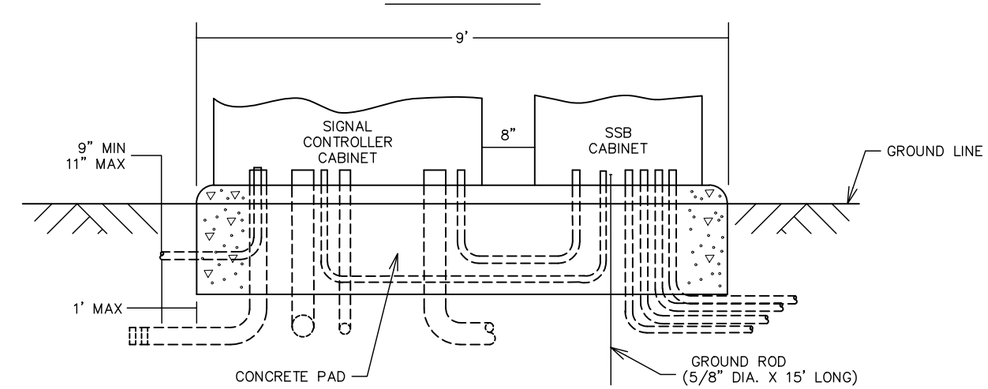

NOTES:

1. THE DEPARTMENT WILL FURNISH THE ANCHOR RODS, NUTS, WASHERS AND RUBBER GASKET FOR THE CONTROLLER CABINET.
2. BEVEL OR CHAMFER A 1/2 IN RADIUS ON THE OUTER EDGE OF THE PAD AND CONCRETE WALK.
3. CAP THE TOP OF THE CONDUITS AFTER PLACEMENT UNTIL CABLES ARE PLACED.
4. PROJECT THE CONDUIT 2" TO 3 " ABOVE THE CONCRETE.
5. USE CONCRETE MIX 3F52.
6. SUPPLY TWO 15 FOOT GROUND ROD ELECTRODES IN ACCORDANCE WITH 2545.3R. PROVIDE ONE GROUND ROD IN THE EQUIPMENT PAD IN ACCORDANCE WITH 2545.3 F.3 AND THE OTHER OUTSIDE OF THE PAD WITH A MINIMUM OF 8 FEET OF SEPARATION BETWEEN ELECTRODES. BOND THE TWO GROUND RODS TOGETHER WITH ONE CONTINUOUS LENGTH UNSPLICED CONDUCTOR FROM THE OUTER MOST GROUND ROD TO THE GROUND BUS BAR IN THE CABINET. EXOTHERMICALLY WELD THE 6 AWG STRANDED GREEN INSULATED CONDUCTOR TO THE GROUND RODS. PLACE THE BONDING CONNECTION TO THE EQUIPMENT PAD GROUND ROD ABOVE THE CONCRETE. APPLY DE–OX COMPOUND TO THE GROUNDING CONNECTIONS AFTER FINAL ASSEMBLY.
7. BOND A 6 AWG GREEN INSULATED GROUNDING CONDUCTOR TO THE REINFORCEMENT BAR MAT BEFORE CONCRETE POURING OPERATIONS. ENSURE THE CONDUCTOR IS PLACED IN THE LOAD SIDE OF THE CABINET. TERMINATE THE GREEN INSULATED 6 AWG GROUND CONDUCTOR ON THE GROUND BUS IN THE SERVICE CABINET WITHOUT SPLICES.
8. ENSURE CONDUIT WITHIN THE PAD FROM ONE CABINET TO ANOTHER IS FULLY ENCASED IN CONCRETE.
9. PLACE THE CONDUITS AS DIRECTED BY THE ENGINEER. ENSURE THE CONDUITS DO NOT INTERFERE WITH THE SUPPORTING MEMBERS OR DIVIDERS OF THE CABINET.
10. ENSURE CONDUITS ARE PLACED TO THE LEFT OF THE DIVIDER AS SHOWN ON THE DETAIL.
11. PLACE ANCHOR RODS AS SHOWN ON THE DETAIL AND PROJECT 3 IN TO 4 IN ABOVE THE CONCRETE.
12. CENTER THE CABINETS ON THE PAD (LEFT & RIGHT) AS SHOWN ON THE DETAIL.
13. CENTER REINFORCEMENT BAR MAT IN CONCRETE PAD.

NO	DATE	DWN	CKD	REVISIONS

ALLIANT

I HEREBY CERTIFY THAT THIS SHEET WAS PREPARED BY ME OR UNDER MY DIRECT SUPERVISION AND THAT I AM A DULY LICENSED PROFESSIONAL ENGINEER UNDER THE LAWS OF THE STATE OF MINNESOTA.

PRINT NAME: MICHAEL P. MCCURDY
SIGNATURE:
DATE XX/XX/2020 LICENSE # 45902

EQUIPMENT PAD DETAIL

RAMSEY COUNTY
WHITE BEAR AVENUE (CSAH 65) & GERVAIS AVENUE IMPROVEMENTS

1:29:30 PM
4/23/2020
c:\pw_working\projectwise\alliant\d0135718\cd200052–dd.dwg

NOTES:

1. ALL ITEMS ON THIS SHEET ARE INPLACE AND SHALL REMAIN INPLACE UNLESS NOTED OTHERWISE.

VEHICLE DETECTION

NO:	SIZE	FUNCTION	LOCATION
D1-1	6'X25'	E ONLY	80
D1-2	6'X40'	C&E (TD)	10
D2-1	6'X6'	C&E	260
D2-2	6'X6'	C&E	260
D2-3	2-6'X8'	C ONLY	10
D3-1	2-6'X15'	C&E	0
D3-2	6'X6'	C&E	80
D4-1	2-6'X6'	C&E	150
D4-2	2-6'X6'	C&E	60
D4-3	6'X15'	C&E	0
D4-4	6'X15'	C&E (TD)	0
D5-1	6'X25'	E ONLY	80
D5-2	6'X40'	C&E (TD)	10
D6-1	6'X6'	C&E	260
D6-2	6'X6'	C&E	260
D7-1	2-6'X15'	C&E	0
D7-2	6'X6'	C&E	80
D8-1	2-6'X6'	C&E	150
D8-2	2-6'X6'	C&E	60
D8-3	6'X15'	C&E	0
D8-4	6'X15'	C&E (TD)	0

C&E =CALL & EXTEND
C =CALL ONLY
E =EXTEND ONLY
(TD) =TIME DELAYED

SIGNAL SYSTEM OPERATION

THE SIGNAL SYSTEM FLASH MODE IS ALL RED.

PHASES 1,3,5 AND 7 ARE PROTECTED/PERMISSIVE LEFT TURNS.

PHASES 1,3,5 AND 7 ARE NON-LOCK DETECTION.

PHASES 2,4,6 AND 8 ARE LOCK DETECTION.

CONTROLLER PHASING, PEDESTRIAN INDICATIONS AND PUSH BUTTONS

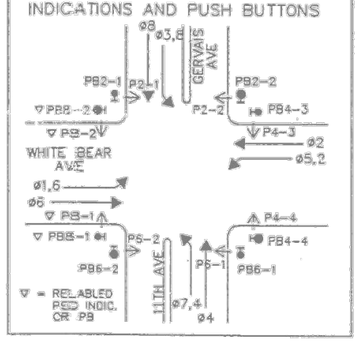

SIGNAL INDICATION CHART

FACE	PHASE	FLASH	INDICATION SIZE R	Y	G	Ⓐ Y	Ⓐ G
2-1	2	R	12"	12"	12"		
2-2	2 and 5	R	12"	12"	12"	12"	12"
2-3	2 and 5	R	12"	12"	12"	12"	12"
2-4	2	R	12"	12"	12"		
4-1	4	R	12"	12"	12"		
4-2	4 and 7	R	12"	12"	12"	12"	12"
4-3	4 and 7	R	12"	12"	12"	12"	12"
REMOVE ~~4-4~~	~~4~~	~~R~~	~~12"~~	~~12"~~	~~12"~~		
6-1	6	R	12"	12"	12"		
6-2	6 and 1	R	12"	12"	12"	12"	12"
6-3	6 and 1	R	12"	12"	12"	12"	12"
6-4	6	R	12"	12"	12"		
8-1	8	R	12"	12"	12"		
8-2	8 & 3	R	12"	12"	12"	12"	12"
8-3	8 & 3	R	12"	12"	12"	12"	12"
REMOVE ~~8-4~~	~~8~~	~~R~~	~~12"~~	~~12"~~	~~12"~~		

SIGNAL HEAD PHASING

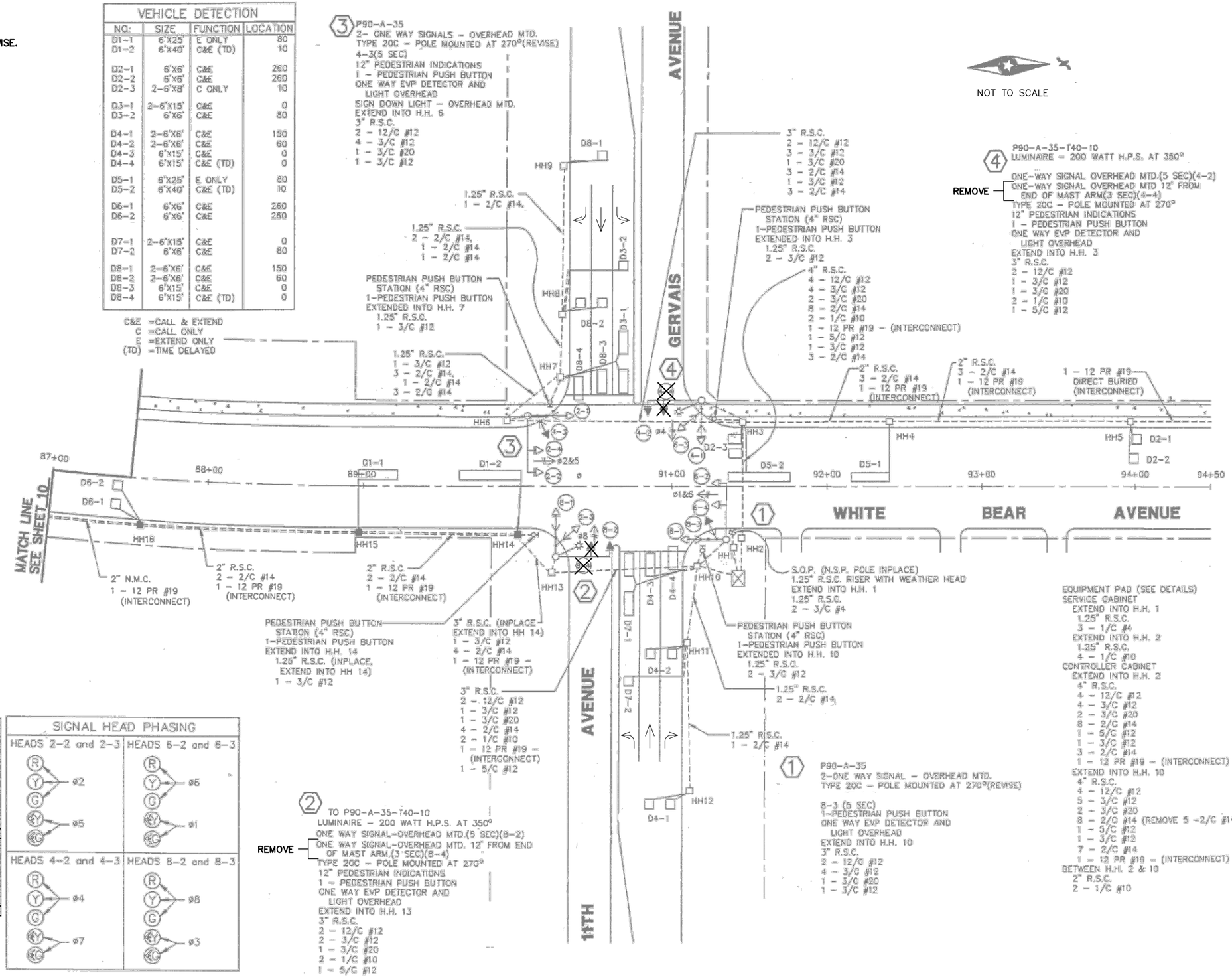

1:29:34 PM
4/23/2020
c:\pw_working\projectwise\alliant\d0135718\cd200052_sgl10.dwg

NO	DATE	DWN	CKD	REVISIONS

ALLIANT

I HEREBY CERTIFY THAT THIS SHEET WAS PREPARED BY ME OR UNDER MY DIRECT SUPERVISION AND THAT I AM A DULY LICENSED PROFESSIONAL ENGINEER UNDER THE LAWS OF THE STATE OF MINNESOTA.

PRINT NAME: MICHAEL P. MCCURDY
SIGNATURE:
DATE XX/XX/2020 LICENSE # 45902

SIGNAL SYSTEM A LAYOUT
WHITE BEAR AVE. & GERVAIS AVE.

RAMSEY COUNTY
WHITE BEAR AVENUE (CSAH 65) & GERVAIS AVENUE IMPROVEMENTS

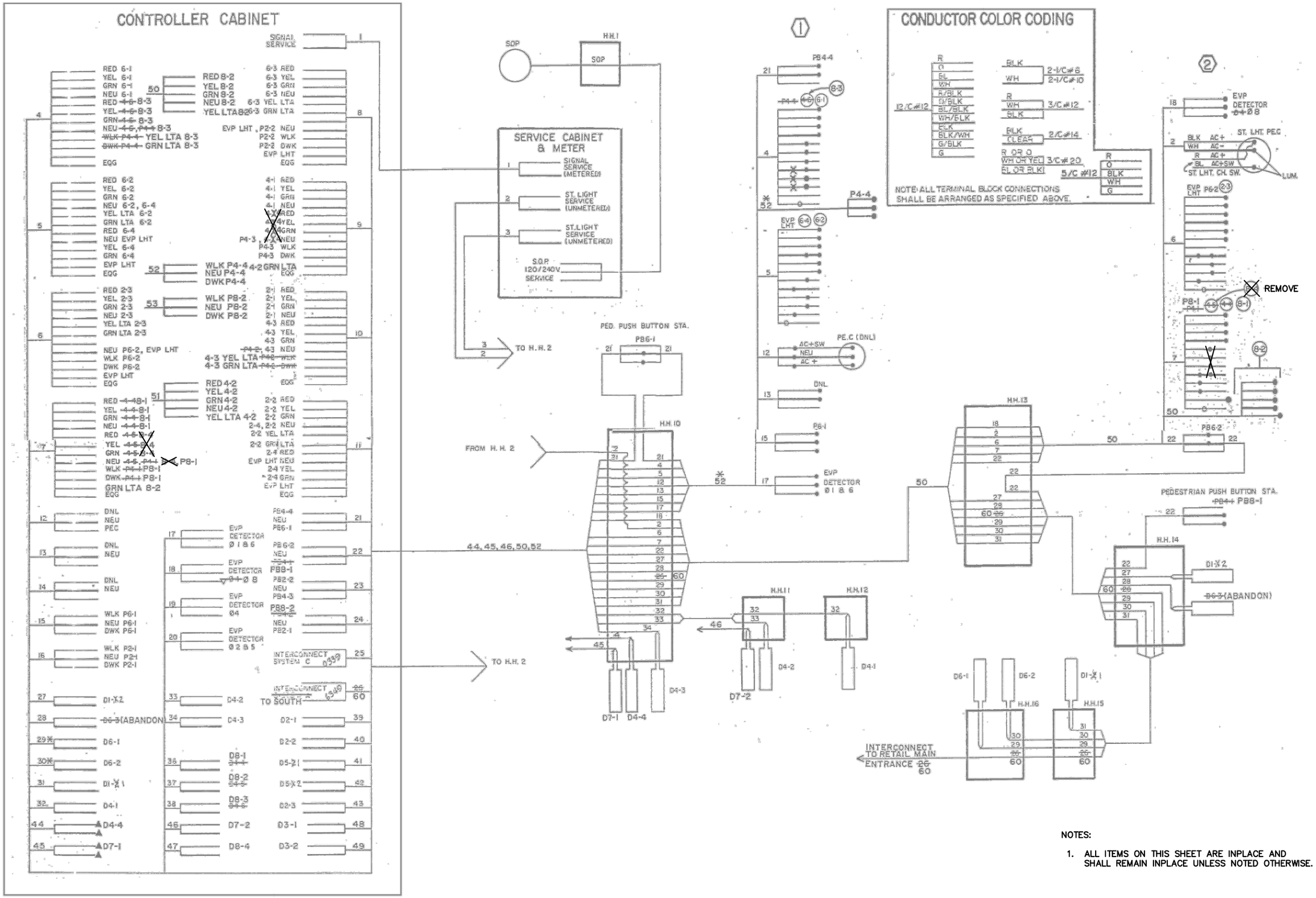

NOTES:

1. ALL ITEMS ON THIS SHEET ARE INPLACE AND SHALL REMAIN INPLACE UNLESS NOTED OTHERWISE.

NO	DATE	DWN	CKD	REVISIONS

ALLIANT

I HEREBY CERTIFY THAT THIS SHEET WAS PREPARED BY ME OR UNDER MY DIRECT SUPERVISION AND THAT I AM A DULY LICENSED PROFESSIONAL ENGINEER UNDER THE LAWS OF THE STATE OF MINNESOTA.

PRINT NAME: MICHAEL P. MCCURDY

SIGNATURE:

DATE XX/XX/2020 LICENSE # 45902

SIGNAL SYSTEM A WIRING DIAGRAM

WHITE BEAR AVE. & GERVAIS AVE.

RAMSEY COUNTY

WHITE BEAR AVENUE (CSAH 65) & GERVAIS AVENUE IMPROVEMENTS

SHEET NO. 43 OF 51 SHEETS

1:29:35 PM
4/23/2020
c:\pw_working\projectwise\alliant\d0135718\cd200052_sgl10.dwg

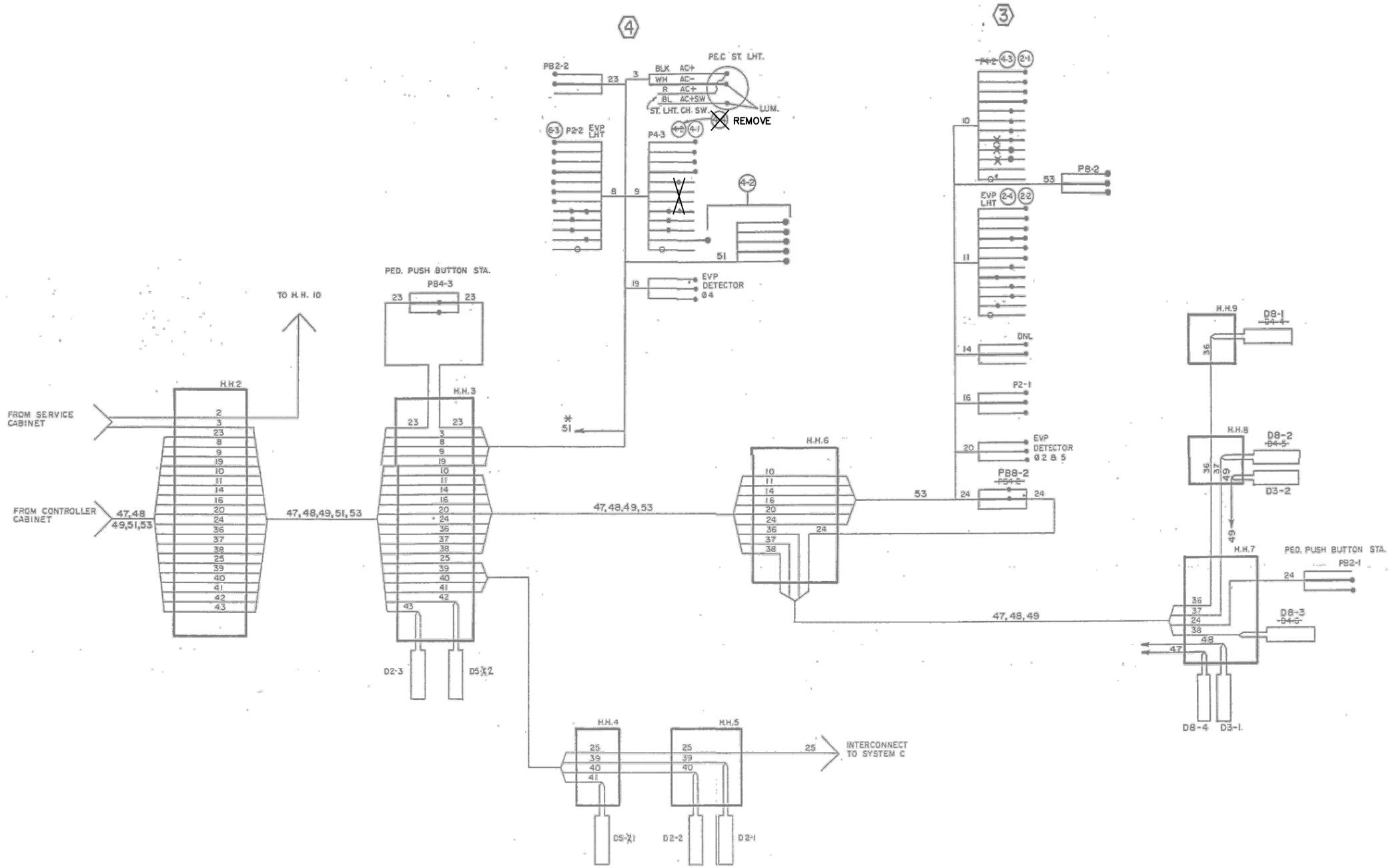

NOTES:

1. ALL ITEMS ON THIS SHEET ARE INPLACE AND SHALL REMAIN INPLACE UNLESS NOTED OTHERWISE.

NO	DATE	DWN	CKD	REVISIONS

ALLIANT

I HEREBY CERTIFY THAT THIS SHEET WAS PREPARED BY ME OR UNDER MY DIRECT SUPERVISION AND THAT I AM A DULY LICENSED PROFESSIONAL ENGINEER UNDER THE LAWS OF THE STATE OF MINNESOTA.

PRINT NAME: MICHAEL P. MCCURDY

SIGNATURE:

DATE XX/XX/2020 LICENSE # 45902

SIGNAL SYSTEM A WIRING DIAGRAM 2

WHITE BEAR AVE. & GERVAIS AVE.

RAMSEY COUNTY
WHITE BEAR AVENUE (CSAH 65) & GERVAIS AVENUE IMPROVEMENTS

SHEET NO. 44 OF 51 SHEETS

1:29:35 PM
4/23/2020
c:\pw_working\projectwise\alliant\d0135718\cd200052_sgl10.dwg

LOOP DETECTOR CHART

DESIGNATION	SIZE (FT)	LOCATION
D1-1, D5-1	2-6x6	20 & 50
D1-2, D5-2	2-6x6	5 & 35
D2-1, D2-2	6x6	220
D4-1, D4-2	2-6x6	5 & 20
D6-1, D6-2	6x6	220
D8-1, D8-2	2-6x6	5 & 20

- ALL LOOP DETECTORS SHALL BE PVC UNLESS NOTED OTHERWISE.
- LOCATION: DISTANCE FROM CROSSWALK/STOP BAR IN FEET.

SIGNAL HEAD CHART

FACE	R	Y	FYA	G
1-1, 1-2	◄	◄	◄	◄
2-1, 2-2	●	●		●
4-1, 4-2, 4-3	●	●		●
5-1, 5-2	◄	◄	◄	◄
6-1, 6-2	●	●		●
8-1, 8-2, 8-3	●	●		●

- ALL SIGNAL INDICATIONS SHALL BE 12" LED
- ALL SIGNAL HEADS SHALL BE BLACK POLYCARBONATE WITH BACKGROUND SHIELDS
- FYA DENOTES FLASHING YELLOW ARROW

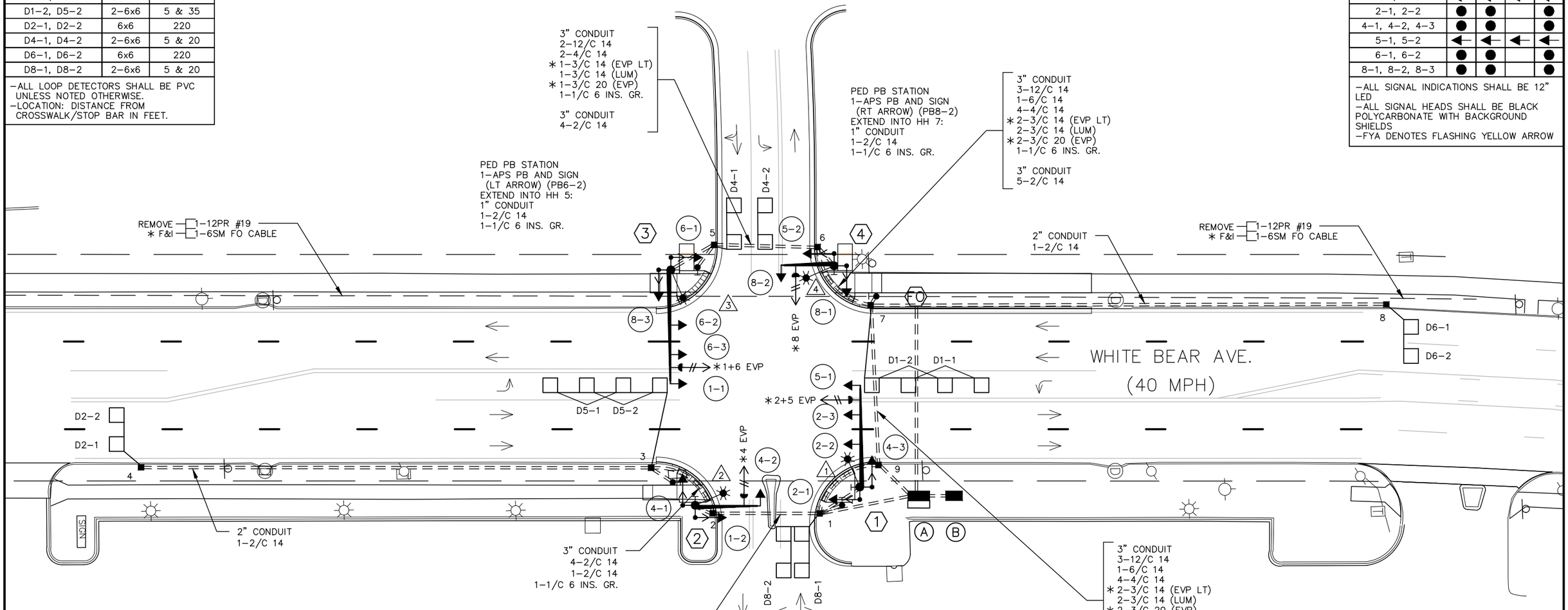

CONTROLLER PHASING, PEDESTRIAN INDICATIONS AND PUSH BUTTONS

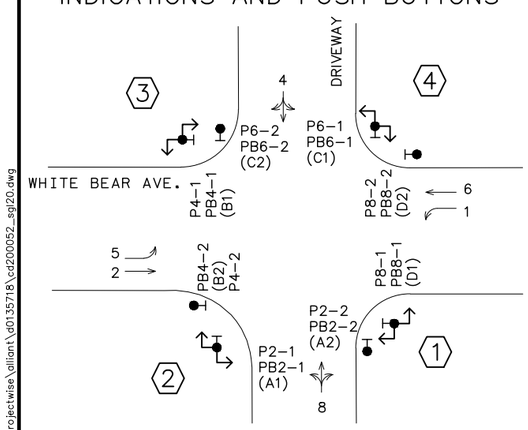

PEDESTRIAN PUSH BUTTONS SHALL BE LOCATED AS SHOWN ABOVE

SIGNAL SYSTEM OPERATION

- THE SIGNAL SYSTEM FLASH MODE IS ALL RED.
- NORMAL OPERATION IS 6 PHASE, WITH PHASES 1 & 5 BEING FLASHING YELLOW ARROWS BY TIME OF DAY.
- PHASES 2 AND 6 SHALL BE ON VEHICLE RECALL.

NOTES:

1. ENSURE THE EXACT LOCATION OF THE HANDHOLES, POLES, LOOP DETECTORS AND EQUIPMENT PAD ARE VERIFIED IN THE FIELD BY COUNTY PERSONNEL.
2. THE CONTRACTOR IS RESPONSIBLE FOR COORDINATING THE CONNECTION OF THE POWER FOR THE TRAFFIC SIGNAL SYSTEM.
3. FOR TYPE D SIGN SEE DETAIL SHEET. ALL SIGNS REQUIRED ARE INCIDENTAL.
4. FOR PAVEMENT MARKINGS SEE SIGNING AND PAVEMENT MARKING PLANS.
5. FOR CONSTRUCTION OF PEDESTRIAN CURB RAMPS, CONCRETE WALK, AND MEDIAN WORK SEE INTERSECTION DETAILS.
6. THIS PLAN SPECIFIES CONDUIT SIZES, TYPES AND GENERAL LOCATIONS. THE EXACT LOCATIONS WILL BE DETERMINED IN THE FIELD.
7. USE PVC OR HDPE FOR ALL NEW CONDUIT.
8. CONDUIT SIZES ARE NOMINAL DIAMETER.
9. ALL WIRES LISTED ARE AWG (AMERICAN WIRE GAUGE).
10. ITEMS DENOTED WITH AND ∗ ARE INCLUDED IN PAYMENT FOR THE EVP SYSTEM PAY ITEM.

NO	DATE	DWN	CKD	REVISIONS

ALLIANT

I HEREBY CERTIFY THAT THIS SHEET WAS PREPARED BY ME OR UNDER MY DIRECT SUPERVISION AND THAT I AM A DULY LICENSED PROFESSIONAL ENGINEER UNDER THE LAWS OF THE STATE OF MINNESOTA.

PRINT NAME: MICHAEL P. MCCURDY
SIGNATURE:
DATE XX/XX/2020 LICENSE # 45902

SIGNAL SYSTEM B LAYOUT
WHITE BEAR AVE. & DRIVEWAY

RAMSEY COUNTY
WHITE BEAR AVENUE (CSAH 65) & GERVAIS AVENUE IMPROVEMENTS

1:29:41 PM
4/23/2020
c:\pw_working\projectwise\alliant\d0135718\cd200052_sgl20.dwg

(1) PA100 POLE FOUNDATION
TYPE PA100-A-40-D40-9 (DAVIT AT 350 DEG)
(PROVIDED BY OTHERS)
1-ANGLE MOUNT SIGNAL OVERHEAD AT 0'
2-STRAIGHT MOUNT SIGNALS OVERHEAD
AT 11' AND 23'
2-ANGLE MOUNT SIGNALS AT 90 AND 180 DEG
2-ANGLE MOUNT C.D. PED HEADS AT 90 AND 180 DEG
1-APS PUSHBUTTON AND SIGN (LT ARROW) (PB8-1)
1-ONE WAY EVP DETECTOR AND CONFIRMATORY LIGHT
(PHASES 2+5)
LUMINAIRE-LED (FOR 40' MOUNTING HEIGHT)
1-R10-X12 SIGN ADJACENT TO HEAD (5-1)
3" NMC TO HH 9:
2-12/C 14
2-4/C 14
1-3/C 14 (EVP LT)
1-3/C 14 (LUM)
1-2/C 14
1-3/C 20 (EVP)
1-1/C 6 INS. GR.

(2) PA85 POLE FOUNDATION
TYPE PA85-A-25-D40-9 (DAVIT AT 350 DEG)
(PROVIDED BY OTHERS)
1-ANGLE MOUNT SIGNAL OVERHEAD AT 0'
2-ANGLE MOUNT SIGNALS AT 90 AND 180 DEG
2-ANGLE MOUNT C.D. PED HEADS AT 90 AND 180 DEG
1-APS PUSHBUTTON AND SIGN (LT ARROW) (PB2-1)
1-ONE WAY EVP DETECTOR AND CONFIRMATORY LIGHT
(PHASES 4)
LUMINAIRE-LED (FOR 40' MOUNTING HEIGHT)
1-TYPE D SIGN (D-1) (SEE SIGN DETAILS)
3" NMC TO HH 2:
1-12/C 14
1-6/C 14
2-4/C 14
1-3/C 14 (EVP LT)
1-3/C 14 (LUM)
1-2/C 14
1-3/C 20 (EVP)
1-1/C 6 INS. GR.

(3) PA100 POLE FOUNDATION
TYPE PA100-A-45-D40-9 (DAVIT AT 350 DEG)
(PROVIDED BY OTHERS)
1-ANGLE MOUNT SIGNAL OVERHEAD AT 0'
2-STRAIGHT MOUNT SIGNALS OVERHEAD
AT 11' AND 23'
2-ANGLE MOUNT SIGNALS AT 90 AND 180 DEG
2-ANGLE MOUNT C.D. PED HEADS AT 90 AND 180 DEG
1-APS PUSHBUTTON AND SIGN (LT ARROW) (PB4-1)
1-ONE WAY EVP DETECTOR AND CONFIRMATORY LIGHT
(PHASES 1+6)
LUMINAIRE-LED (FOR 40' MOUNTING HEIGHT)
1-R10-X12 SIGN ADJACENT TO HEAD (5-1)
3" NMC TO HH 5:
2-12/C 14
2-4/C 14
1-3/C 14 (EVP LT)
1-3/C 14 (LUM)
1-2/C 14
1-3/C 20 (EVP)
1-1/C 6 INS. GR.

(4) PA85 POLE FOUNDATION
TYPE PA85-A-20-D40-9 (DAVIT AT 350 DEG)
(PROVIDED BY OTHERS)
1-ANGLE MOUNT SIGNAL OVERHEAD AT 0'
2-ANGLE MOUNT SIGNALS AT 90 AND 180 DEG
2-ANGLE MOUNT C.D. PED HEADS AT 90 AND 180 DEG
1-APS PUSHBUTTON AND SIGN (LT ARROW) (PB6-1)
1-ONE WAY EVP DETECTOR AND CONFIRMATORY LIGHT
(PHASES 4)
LUMINAIRE-LED (FOR 40' MOUNTING HEIGHT)
1-TYPE D SIGN (D-1) (SEE SIGN DETAILS)
3" NMC TO HH 2:
1-12/C 14
1-6/C 14
2-4/C 14
1-3/C 14 (EVP LT)
1-3/C 14 (LUM)
1-2/C 14
1-3/C 20 (EVP)
1-1/C 6 INS. GR.

(A) EQUIPMENT PAD (SEE DETAIL SHEET)
SERVICE CABINET (SSB) NO BATTERY BACKUP SYSTEM OR BATTERIES
CONTROLLER AND CABINET

3" CONDUIT TO HH 1:
4-12/C 14
1-6/C 14
4-4/C 14
2-3/C 14 (EVP LT)
2-3/C 20 (EVP)
1-1/C 6 INS. GR.

3" CONDUIT TO HH 9:
3-12/C 14
1-6/C 14
4-4/C 14
2-3/C 14 (EVP LT)
2-3/C 20 (EVP)
1-1/C 6 INS. GR.

3" CONDUIT TO HH 1:
9-2/C 14

2-3" CONDUIT TO HH 9:
9-2/C 14

1.5" CONDUIT TO FO SPLICE VAULT:
2-6SM FO CABLE

GROUND WIRE AND GROUND ROD - MIN 8' OUT FROM PAD
2-2" AND 1-3" CONDUIT STUBBED OUT (CAPPED BOTH ENDS)
CONTROLLER CABINET TO SERVICE CABINET:
2" CONDUIT
3-1/C 6
SERVICE CABINET TO POLE MOUNTED TRANSFORMER:
SERVICE LATERAL CONDUCTORS SHALL BE FURNISHED, INSTALLED, AND
TERMINATED BY XCEL ENERGY

SERVICE CABINET TO HH 1:
2" CONDUIT
2-3/C 14 (LUM)
SERVICE CABINET TO EXTERNAL GR. RD.:
1" CONDUIT
1-1/C 6 INS. GR.
SERVICE CABINET TO HH 9:
2" CONDUIT
3-3/C 14 (LUM)

(B) SOP - WOOD POLE (EXCEL ENERGY)
1-3" CONDUIT (POLE TO SERVICE CABINET)
1-1/4" PULL ROPE (POLE TO SERVICE CABINET)

1:29:41 PM
4/23/2020
c:\pw_working\projectwise\alliant\d0135718\cd200052_sgl20.dwg

NO	DATE	DWN	CKD	REVISIONS

ALLIANT

I HEREBY CERTIFY THAT THIS SHEET WAS PREPARED BY ME OR UNDER MY DIRECT SUPERVISION AND THAT I AM A DULY LICENSED PROFESSIONAL ENGINEER UNDER THE LAWS OF THE STATE OF MINNESOTA.

PRINT NAME: MICHAEL P. MCCURDY
SIGNATURE:
DATE XX/XX/2020 LICENSE # 45902

SIGNAL SYSTEM B NOTES
WHITE BEAR AVE. & DRIVEWAY

RAMSEY COUNTY
WHITE BEAR AVENUE (CSAH 65) & GERVAIS AVENUE IMPROVEMENTS

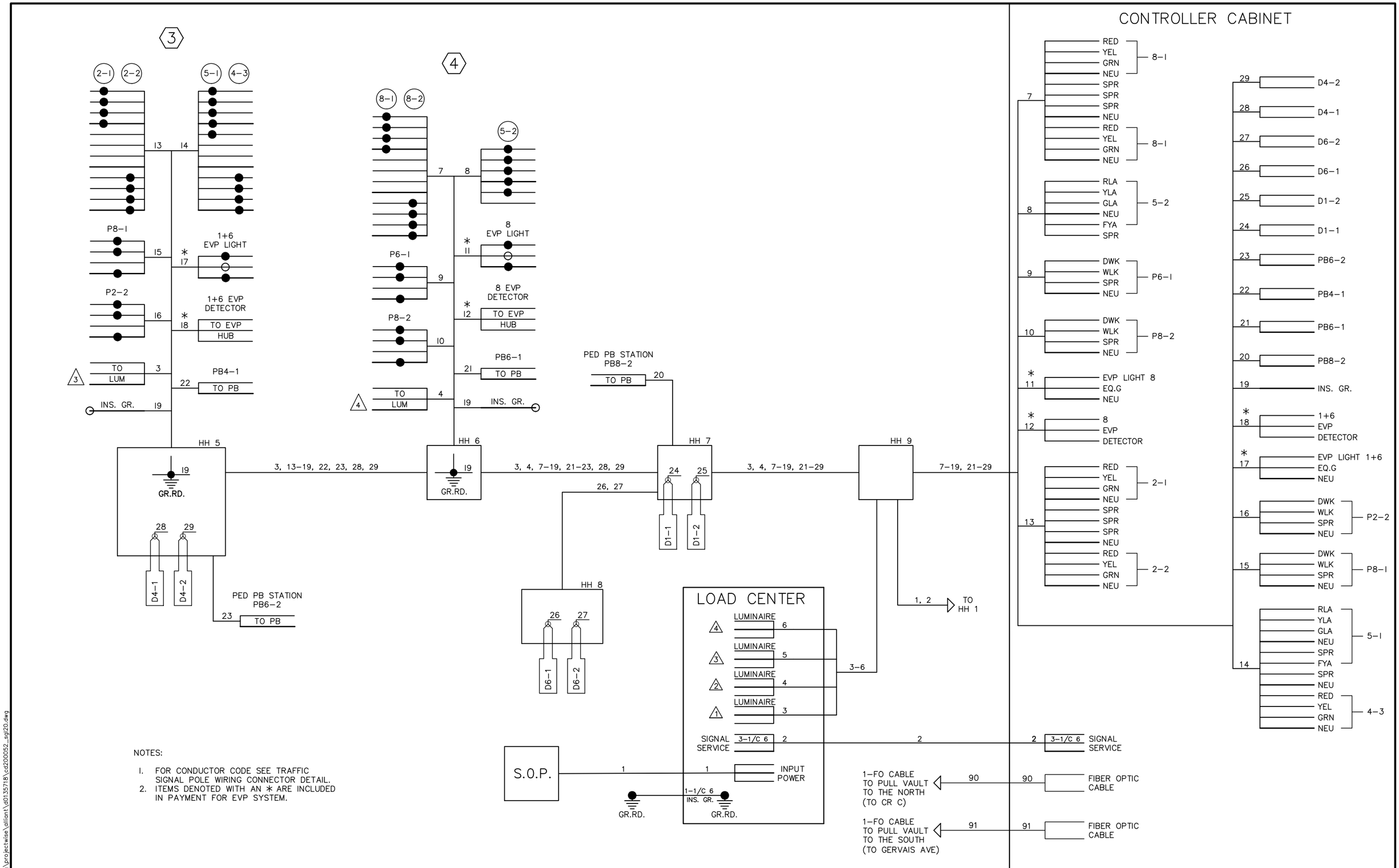

NO	DATE	DWN	CKD	REVISIONS

ALLIANT

I HEREBY CERTIFY THAT THIS SHEET WAS PREPARED BY ME OR UNDER MY DIRECT SUPERVISION AND THAT I AM A DULY LICENSED PROFESSIONAL ENGINEER UNDER THE LAWS OF THE STATE OF MINNESOTA.

PRINT NAME: MICHAEL P. MCCURDY
SIGNATURE:
DATE XX/XX/2020 LICENSE # 45902

SIGNAL SYSTEM B WIRING

WHITE BEAR AVE. & DRIVEWAY

RAMSEY COUNTY
WHITE BEAR AVENUE (CSAH 65) & GERVAIS AVENUE IMPROVEMENTS

SHEET NO. 47 OF 51 SHEETS

1:29:42 PM
4/23/2020
c:\pw_working\projectwise\alliant\d0135718\cd200052_sgl20.dwg

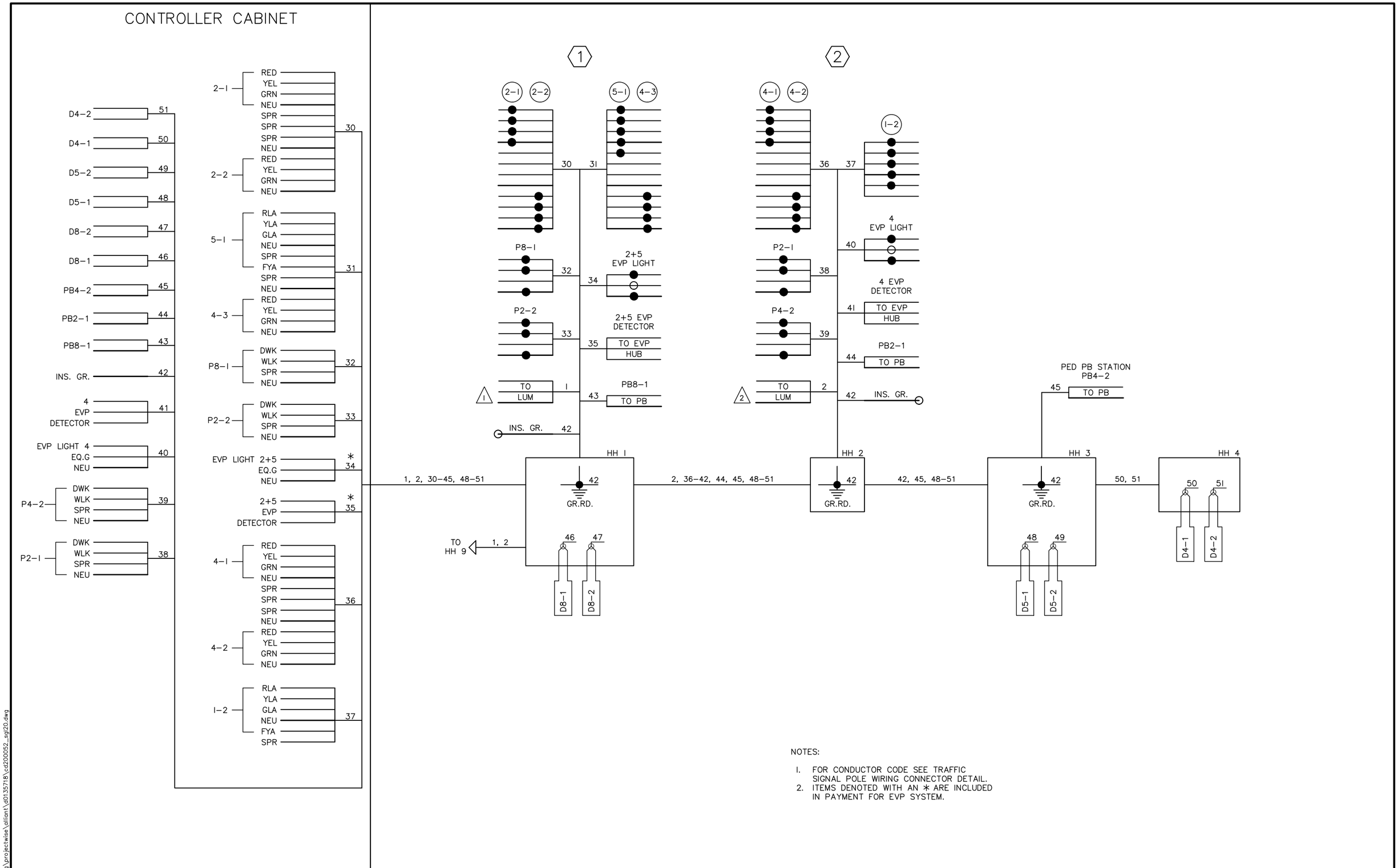

NOTES:

1. FOR CONDUCTOR CODE SEE TRAFFIC SIGNAL POLE WIRING CONNECTOR DETAIL.
2. ITEMS DENOTED WITH AN * ARE INCLUDED IN PAYMENT FOR EVP SYSTEM.

NO	DATE	DWN	CKD	REVISIONS

ALLIANT

I HEREBY CERTIFY THAT THIS SHEET WAS PREPARED BY ME OR UNDER MY DIRECT SUPERVISION AND THAT I AM A DULY LICENSED PROFESSIONAL ENGINEER UNDER THE LAWS OF THE STATE OF MINNESOTA.

PRINT NAME: MICHAEL P. MCCURDY
SIGNATURE:
DATE XX/XX/2020 LICENSE # 45902

SIGNAL SYSTEM B WIRING 2
WHITE BEAR AVE. & DRIVEWAY

RAMSEY COUNTY
WHITE BEAR AVENUE (CSAH 65) & GERVAIS AVENUE IMPROVEMENTS

SHEET NO. 48 OF 51 SHEETS

1:29:43 PM
4/23/2020
c:\pw_working\projectwise\alliant\d0135718\cd200052_sgl20.dwg

MAST ARM SIGN LOCATION

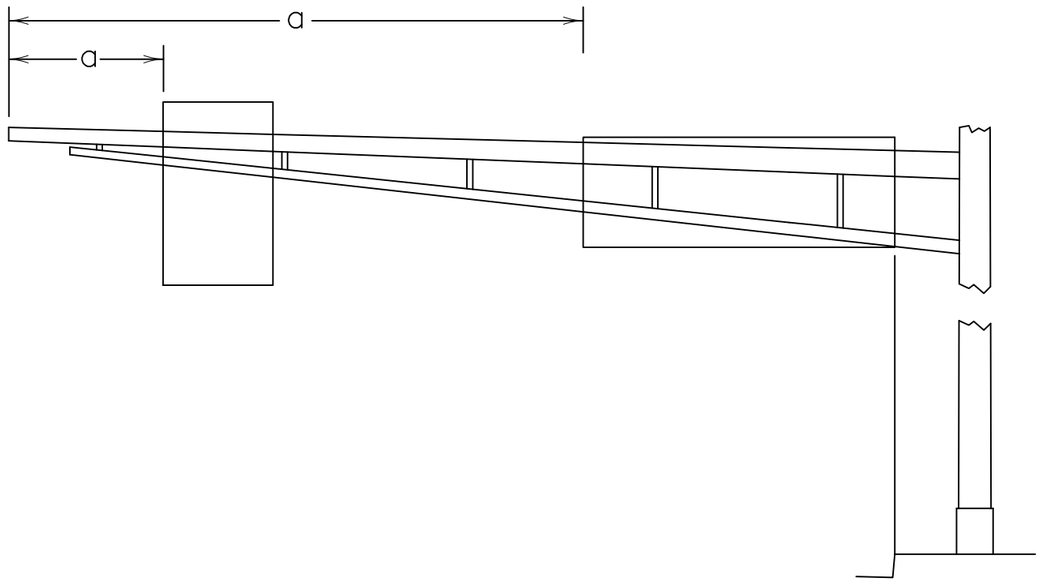

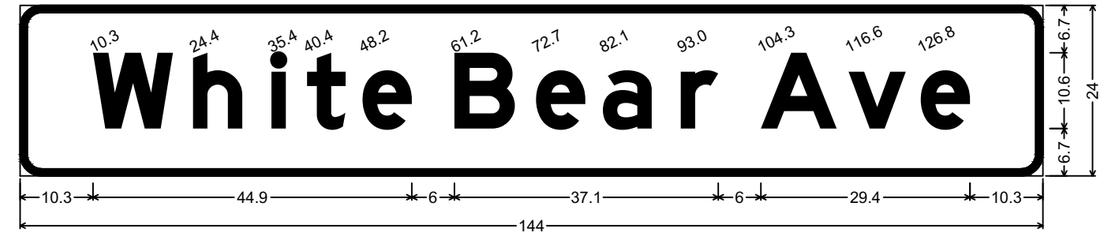

D-1;
3.0" Radius, 1.0" Border, White on, Green;
"White", E Mod; "Bear", E Mod; "Ave", E Mod;

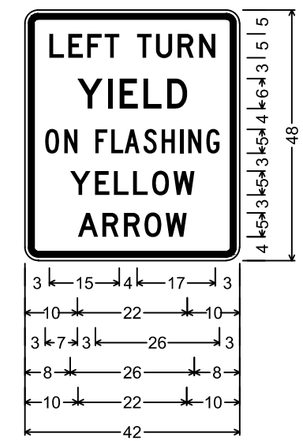

R10-X12_42x48;
2" Radius, 1" Border, 1" Indent, Black on, White;
"LEFT", D specified length;
"TURN", D specified length;
"YIELD", D specified length;
"ON", C specified length;
"FLASHING", C specified length;
"YELLOW", D specified length;
"ARROW", D specified length;

MAST ARM MOUNTED SIGN

SIGN NO	POLE NO	QTY	PANEL					MOUNTING STIFFENERS		PANEL LEGEND
			a	SIZE	AREA	TOTAL AREA		NUMBER	SPACING (1)	
			FEET	INCH	SQ FT	SQ FT				
R10-X12-042	1, 3	2	1	42 x 48	14.00	28.00		2	30	LEFT TURN YIELD ON FLASHING YELLOW ARROW
D-1	2, 4	2	11, 6	144 x 24	24.00	48.00		4	30	WHITE BEAR AVE

SPECIFIC NOTES:

(1) SPACING BETWEEN STIFFENERS SHALL NOT EXCEED 36 INCHES AND SHALL BE UNIFORMLY SPACED. SEE MNDOT STANDARD SIGNS AND MARKINGS MANUAL, PAGE 105A FOR STIFFENER SPACING REQUIREMENTS.

GENERAL NOTES:

1. CORNERS OF STANDARD SIGN PANELS WITH MARGINS SHALL BE TRIMMED.
2. FOR STRUCTURAL DETAILS OF MAST ARM MOUNTED SIGNS SEE MNDOT STANDARD SIGNS AND MARKINGS MANUAL, PAGE 105A.
3. FOR TYPE D STRINGER AND PANEL JOINT DETAILS SEE MNDOT STANDARD SIGNS AND MARKINGS MANUAL, PAGE 105.
4. ALL SIGNAL SYSTEM MOUNTED SIGNS ARE INCLUDED IN THE TRAFFIC CONTROL SIGNAL SYSTEM PAY ITEM.
5. SIGN PANEL DIMENSIONS ARE IN INCHES.
6. SEE MNDOT STANDARD SIGNS AND MARKINGS MANUAL FOR STANDARD SIGN DRAWINGS, PUNCHING CODES, ARROW, FRACTIONS AND OVERLAY DETAILS.

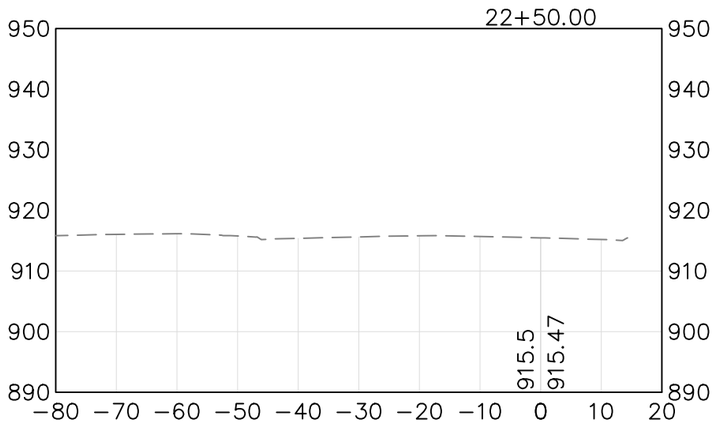

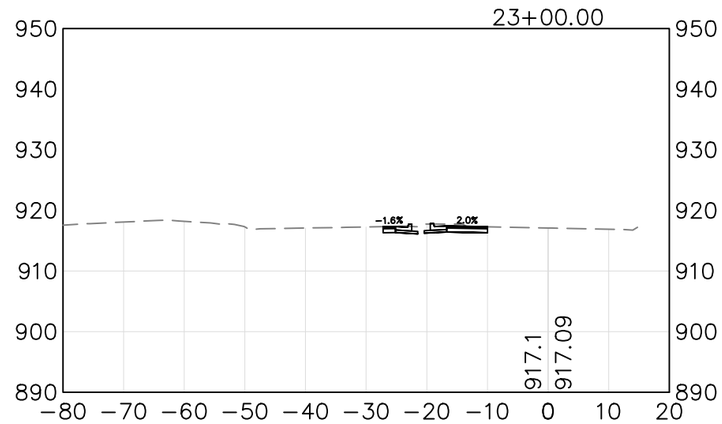

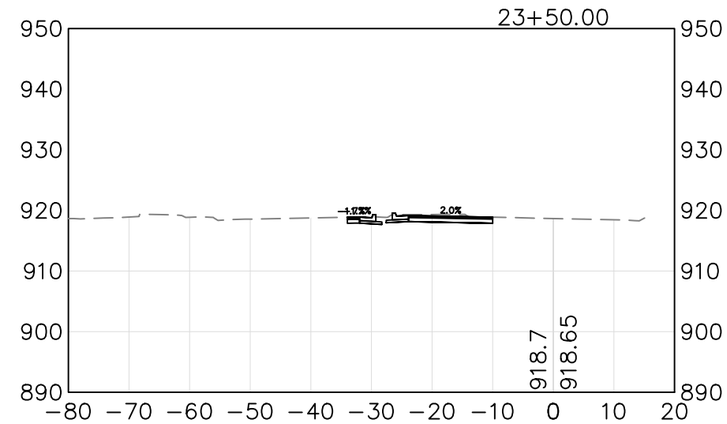

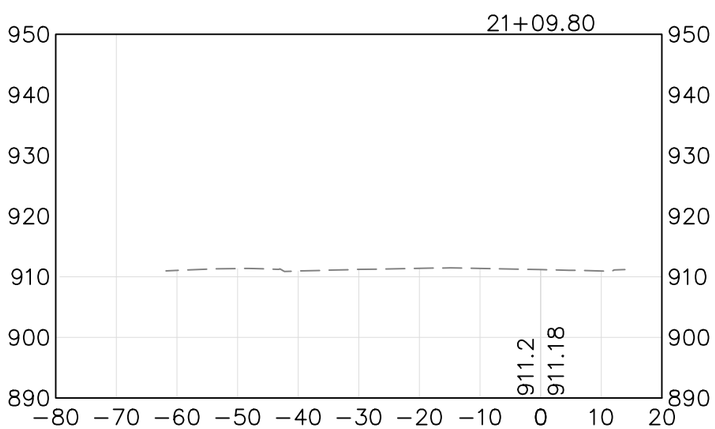

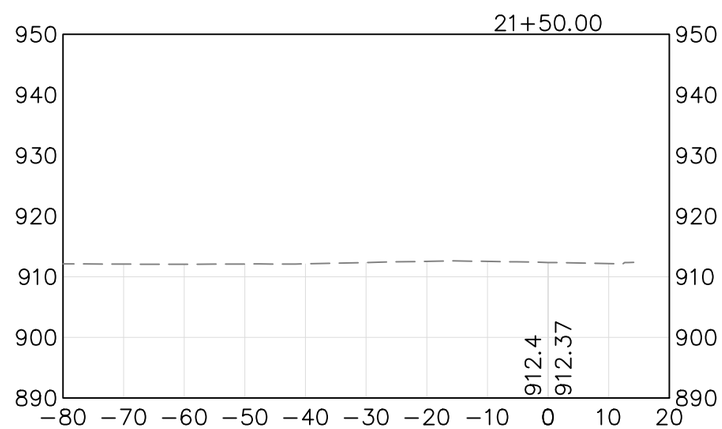

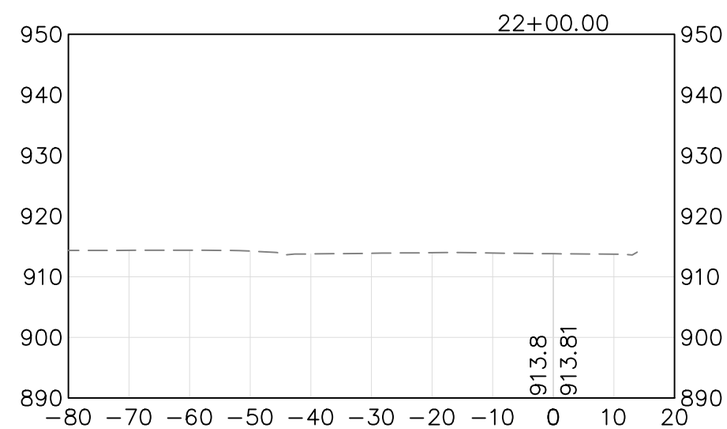

1:29:48 PM
4/23/2020
c:\pw_working\projectwise\alliant\d0135718\cd200052-xs.dwg

NO	DATE	DWN	CKD	REVISIONS

ALLIANT

CROSS SECTIONS

RAMSEY COUNTY
WHITE BEAR AVENUE (CSAH 65) & GERVAIS AVENUE IMPROVEMENTS

SHEET NO. 50 OF 51 SHEETS

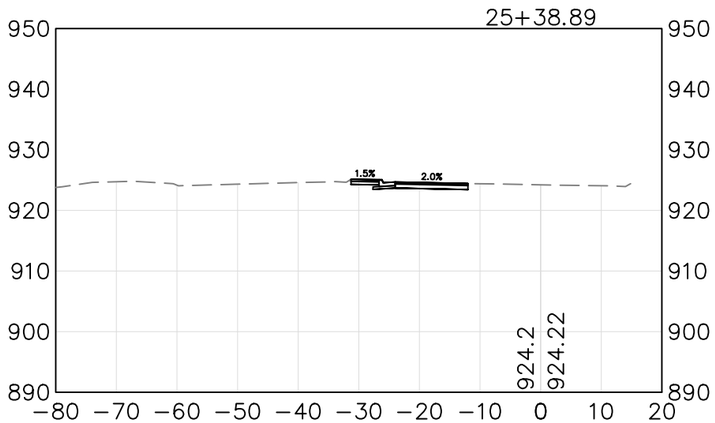

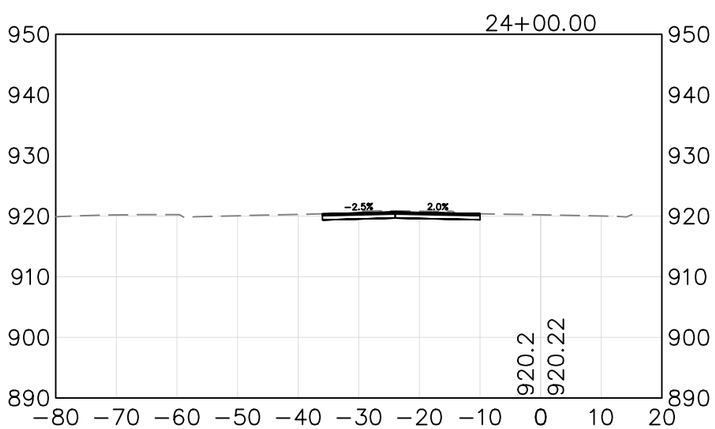

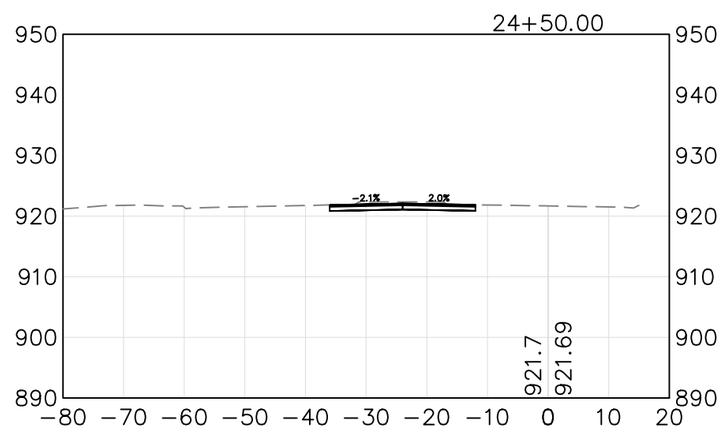

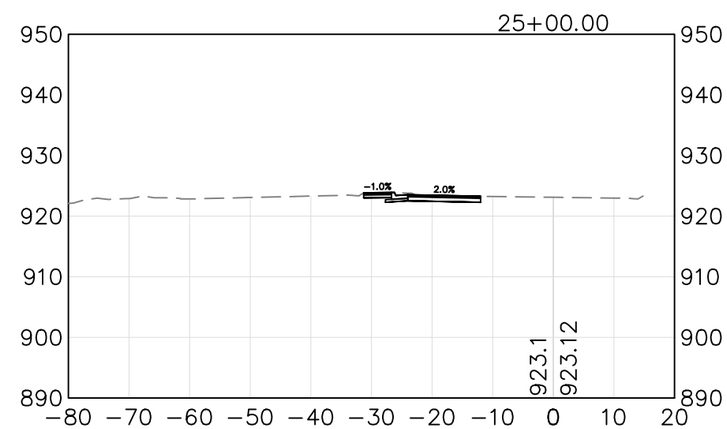

1:29:48 PM
4/23/2020
c:\pw_working\projectwise\alliant\d0135718\cd200052-xs.dwg

NO	DATE	DWN	CKD	REVISIONS

ALLIANT

CROSS SECTIONS

RAMSEY COUNTY
WHITE BEAR AVENUE (CSAH 65) & GERVAIS AVENUE IMPROVEMENTS

SHEET NO. 51 OF 51 SHEETS