Maplewood

GARAGE/ADDITION
Information Sheet – 1

Building Permits are required for garages and additions

Application Requirements for a Building Permit

A. **Permit application** must be completed.

B. **Three sets of construction plans. Construction plans shall include the following:**

1. Site drawing (See C).
2. Size of proposed structure.
3. Footing sizes and reinforcement.
4. Floor truss or joist detail.
5. Roof truss or rafter detail.
6. Wall stud size, height, and spacing.
7. Window/door locations
8. Header spans and size for each individual opening.
9. Sheathing detail.

C. **Site drawing** must be submitted by owner or applicant. The following must be indicated:

1. Lot size;

2. Location and dimensions of all existing and proposed buildings on lot (including proposed setbacks);

3. Owner must be able to show corner monuments on the site to the satisfaction of the building inspector.

D. **Fees**

1. **Building permit fee** is based on a published fee schedule available at the building and inspection division.

2. **Surcharge** on all building permits is required by the State of Minnesota.

3. **Plan check fee** is equal to 65% of the building permit fee as required when valuation of proposed construction exceeds $1,000.00 and a plan is required to be submitted.

E. No building permit will be granted to erect any building or structure on outlots within the city of Maplewood.

F. No building permit will be granted on any lot that does not abut an improved public street.

G. Building permits are not required for:
One story detached accessory structures, used as tool and storage sheds, playhouse and similar uses, provided the floor area does not exceed 200 square feet.

This pamphlet is a guide to the most common questions and problems regarding garages and additions. It is not intended nor shall it be considered a complete set of requirements.

A "4 season" structure shall be considered an addition and as such, the provisions of the MN Energy Code shall apply.

Minimum Setback Requirements

	Front* (In Feet)	Side (In Feet)	Rear (In Feet)
Dwelling	30	10	20% of lot depth
Screen Porch	30	10	20% of lot depth
3 – Season Porch	30	10	20% of lot depth
Gazebo	30	10	30
Accessory Building	30†	5	5
Garage	30	5	5
Driveway	–	5	5

* The front yard setback is 30 feet or the prevailing setback in the adjacent houses, whichever is greater. Greater setbacks may be required based upon the planned, widened rights-of-way contained in the current master plan for streets and highways. Maximum building area coverage shall be limited to 30% of the lot area.

† Must not be closer to the street than principal structure.

Verification of Lot Lines

Each building permit application for new construction of a principal building shall include a certified land survey by a registered land surveyor showing that permanent iron monuments have been placed at each lot corner. **Iron monuments shall be visible at the time of the footing form inspection for all construction, including accessory buildings and additions.** Plastic identification caps are required on permanent irons. The city may waive all or part of this requirement if the city determines that stakes are not needed to determine whether the city's setback requirements are met.

Accessory Buildings

A. The areas of accessory buildings on a lot shall be limited to the areas in the following table:

Lot area (sq. ft.)	(2) Detached bldgs w/o an attached garage	(3) Attached garages without bldgs.	(4) Combination of detached and attached garage* buildings
Under 8,000	786	768	1,188
8,000-11,999	1,000	1,000	1,420
12,000-15,999	1,000	1,000	1,480
16,000-20,999	1,100	1,100	1,660
21,000-41,999	1,250	1,250	1,850
42,000 +	1,250 (garage) 1,000 (all other bldgs.)	1,250	2,500

*The total area of all detached accessory buildings shall not exceed the area in column (2). The total of all attached garages shall not exceed the areas in column (3).

B. A private garage shall not exceed 16 feet in height as viewed from the street.

C. The city council may approve an increase in height or area by conditional use permit. However, the maximum area of any one building shall not exceed the maximum area allowed for an attached garage in subsection A and the height shall not exceed the height of the house.

D. Detached garages shall not include living space. No commercial use of a garage shall occur unless authorized by the city council.

Framing Requirements

A. **Base Plates** on concrete shall be of approved treated wood or approved wood of natural resistance to decay (redwood, cedar, etc.)

B. **Roof & Floor Trusses** shall not be altered, cut, bored, notched or modified.

C. **Enclosed, Usable Space** under the stairs shall be protected by materials such as 1/2" Type X gypsum.

D. **Handrails** shall be continuous the full length of the stairs and grippable by design.

E. **Header Spans** for openings shall be sized with required bearing to foundation. Engineered beams may be required for larger spans.

Sheathing

Allowable spans and loads for wood structural panels for roof and subfloor sheathing:

Panel ID Index	Minimum Panel Thickness in Inches	Roof				Floor Max. Span in Inches
		Max. Span in Inches		Load in Lbs. Per Sq. Ft.		
		With edge support	Without edge support	Total load	Live load	
12/0	5/16	12	12	40	30	0
16/0	5/16	16	16	40	30	0
20/0	5/16	20	20	40	30	0
24/0	3/8	24	20	40	30	0
24/16	7/16	24	24	50	40	12
32/16	15/32, 1/2	32	28	40	30	16
42/20	19/32, 5/8	40	32	40	30	16
48/24	23/32, 3/4	48	36	45	35	20
60/32	7/8	60	48	45	35	24

Wall Sheathing may be of an approved material that conforms to one of the braced wall panel construction methods.

Light, Ventilation and Ceiling Height

Light All habitable rooms shall have a window area equal to at least eight percent of the floor area.

Ventilation Windows shall be a minimum 3 square feet and one half of the window shall be openable. Windows shall open directly onto a street, public alley, yard or court located on the same lot as the building.

To determine light and ventilation, any room may be considered a portion of an adjoining room when half of the area of the common wall is open and unobstructed. The opening must be greater than one-tenth of the floor area of the interior room but not less than 25 square feet.

Minimum **ceiling height** in all habitable rooms, hallways, corridors, bathrooms, toilet rooms, laundry rooms, and basements shall have a height of not less than 7 feet.

Crawl Space

The under-floor space between the bottom of the floor joists and the earth under any building (except space occupied by a basement) shall have ventilation openings through foundation walls or exterior walls. Access openings through a floor shall be a minimum 18 x 24 and a minimum 16 x 24 for a penetration through a perimeter wall.

Attic Ventilation

Vent attic with at least 1 sq. ft. of vent for every 150 sq. ft. of attic area. Attic may be vented 1/300 if 50 percent of the venting is in the soffit and 50 percent is near the roof peaks.

Flashing

Exterior openings exposed to the weather shall be flashed in such manner as to make them waterproof.

Valley Flashing

Valley linings shall be installed in accordance with manufacture's installation instructions before applying shingles. Valley linings of the following types shall be permitted:

1. For open valley (valley lining exposed) lined with metal, the valley lining shall be at least 24 inches wide using approved corrosion-resistant metals.
2. For open valley, valley lining of two plies of mineral surfaced roll roofing shall be permitted. The bottom layer shall be 18 inches and the top layer a minimum 36 inches wide.
3. For closed valleys (valley covered with shingles), valley lining of smooth roll roofing at least 36 inches wide or approved underlayment complying with ASTM D 1970.

Asphalt shingles

Asphalt shingles shall not be used on roofs with less than a 2:12 pitch and require special application procedures for pitches less than 4:12. Manufacturer's instructions on package must be followed.

Ice Barrier

An ice barrier that consists of at least two layers of underlayment cemented together or of a self-adhering polymer modified bitumen sheet, shall be used in lieu of normal underlayment and extend from the lowest edges of all roof surfaces to a point at least 24 inches inside the exterior wall line of the building. Typically, two rows are required but more than two may be required depending on the size of the soffit overhang.

EXCEPTION: Detached accessory structures that contain no conditioned floor area.

Basements and Sleeping Rooms

Basements and every sleeping room shall have at least one window meeting all egress requirements:

A. Sill height - not more than 44" above the floor
B. Operable area - not less than 5.7 square feet
C. Opening height - not less than 24"
D. Opening width - not less than 20"

Fire Protection

Garages shall be separated from living areas with approved material such as ½" gypsum board or equivalent, applied to the garage side.

Garages and dwellings closer than 10' to each other shall have fire protection as required by code.

When ceilings are used as part of the separation, all ceiling supports and walls shall also be protected. Attic access openings and folding ladder are not permitted. Doors leading into the dwelling shall be approved assemblies.

Foam Plastic Insulation

Foam plastic insulation shall be separated from the interior of a building by an approved thermal barrier of a minimum ½ gypsum wallboard or an approved finish material equivalent to a thermal barrier material that will limit the average temperature rise of the unexposed surface to no more than 250 degree Fahrenheit after 15 minutes of fire exposure.

Smoke Alarms

When alterations, repairs or additions requiring a permit occur, or when one or more sleeping rooms are added or created in existing buildings, the entire building shall be provided with smoke alarms as required for new homes, and the smoke alarms shall be interconnected and hardwired. This includes the installation of a smoke alarm in the basement, each floor level, corridor or hallway serving sleeping areas and in each bedroom. Please call the building inspection department for specific information concerning smoke detector locations. Smoke detectors may be battery operated when installed in additions or existing buildings where construction is considered closed.

Other Permits

Separate plumbing, heating, gas, fireplace and electrical permits are required for each type of work being done.

Minimum Inspections Needed

Footing - When footing is excavated and formed or slab is formed and sand cushion and reinforcement are in place.

Framing - When all framing is complete and all mechanical, electrical, plumbing and fireplace rough-in inspections are approved. Do not insulate before framing inspection. .

Insulation - When all wall insulation is in place and ceiling and wall vapor barriers are in place.

Wallboard - When sheet rock is fastened and before any taping.

Final - To be made after grading is finished and the building is completed and ready for occupancy. A certificate of occupancy is required by city ordinance.

To schedule Inspections:

Building Inspections - call 651-249-2300
Electrical Inspections - call 651-426-1319 between 7:30 and 9:30 a.m.
Heating Inspections - call 651-249-2300
Plumbing Inspections - call 651-249-2300

Concrete Slabs

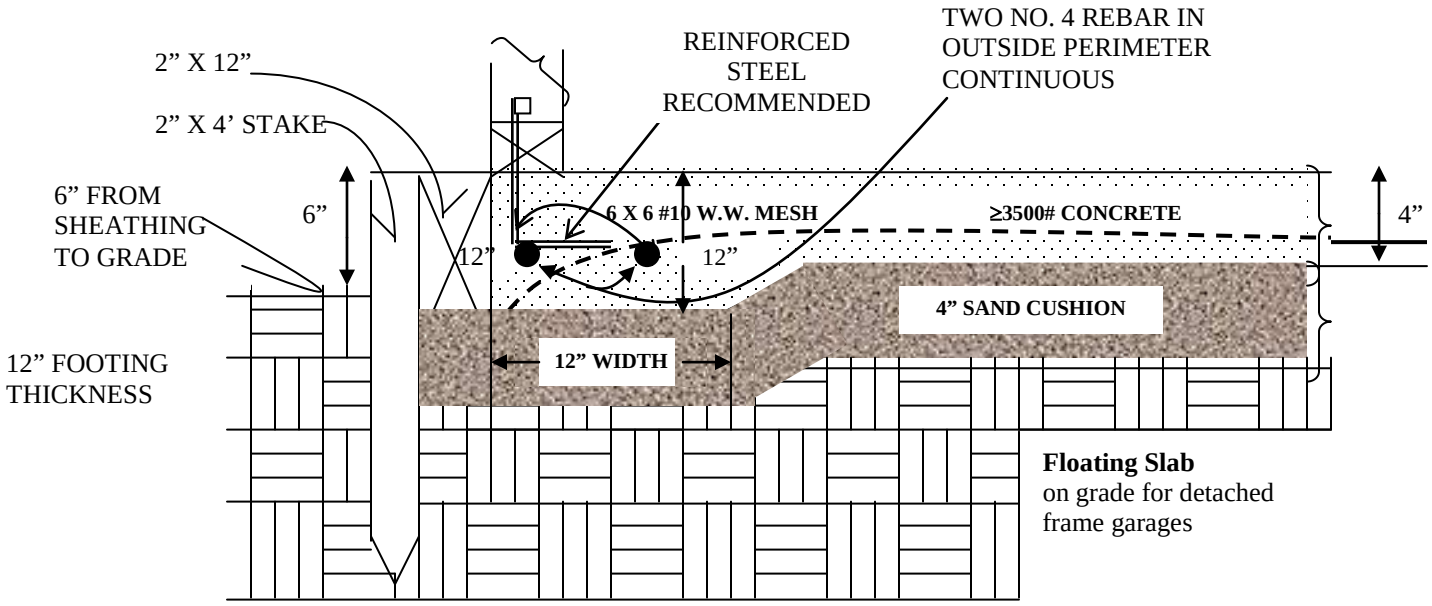

One-half inch anchor bolts or approved anchor straps shall be embedded 7” into masonry and spaced not more than 6’ on center, within 12” of all corners, and within 12” of all splices in plate. If approved anchor straps are used, they must be spaced according to manufacturer’s instructions.

NOTCHING AND HOLE BORING

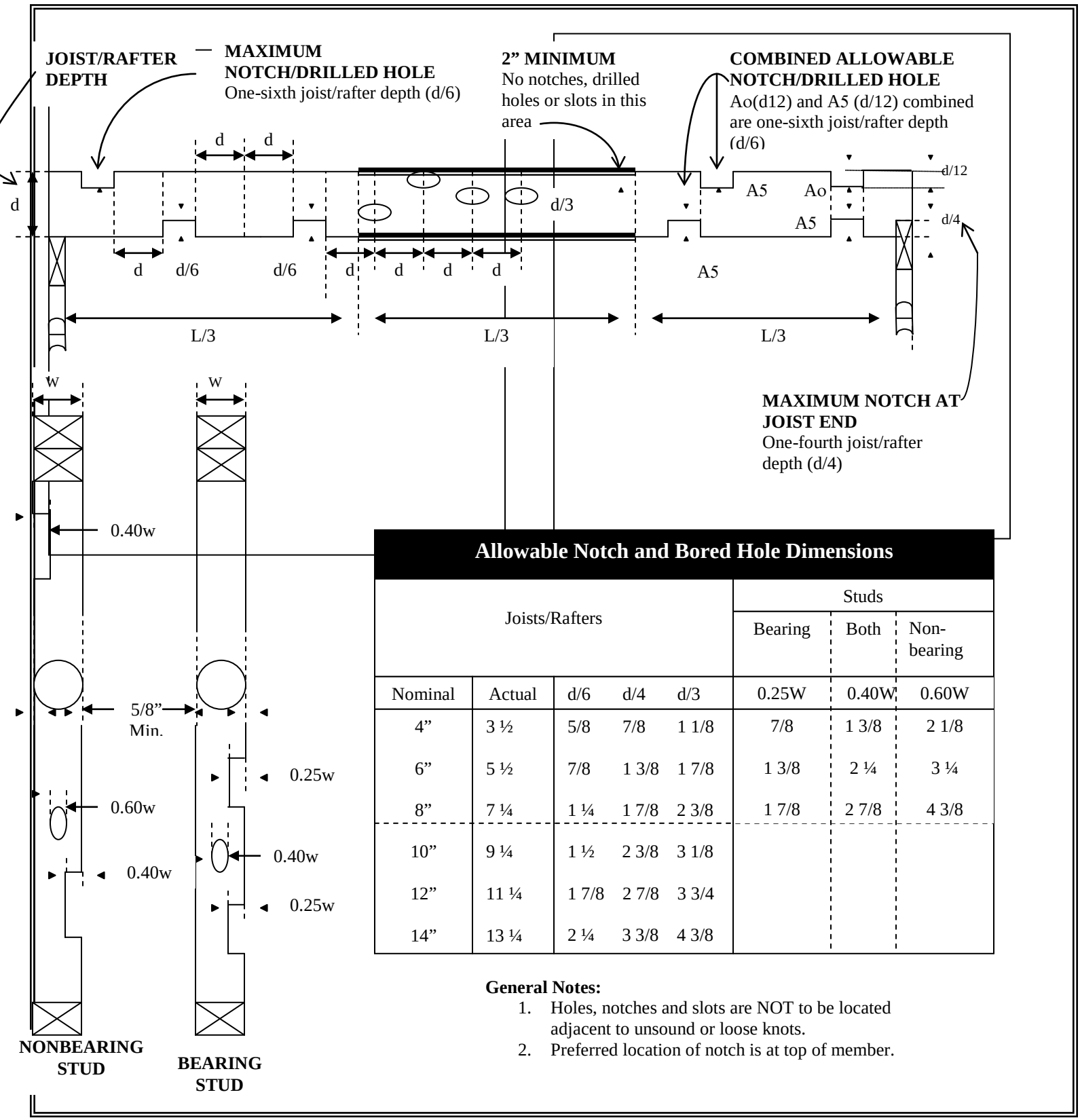

Allowable Notch and Bored Hole Dimensions

Joists/Rafters					Studs		
					Bearing	Both	Non-bearing
Nominal	Actual	d/6	d/4	d/3	0.25W	0.40W	0.60W
4"	3 ½	5/8	7/8	1 1/8	7/8	1 3/8	2 1/8
6"	5 ½	7/8	1 3/8	1 7/8	1 3/8	2 ¼	3 ¼
8"	7 ¼	1 ¼	1 7/8	2 3/8	1 7/8	2 7/8	4 3/8
10"	9 ¼	1 ½	2 3/8	3 1/8			
12"	11 ¼	1 7/8	2 7/8	3 3/4			
14"	13 ¼	2 ¼	3 3/8	4 3/8			

General Notes:

1. Holes, notches and slots are NOT to be located adjacent to unsound or loose knots.
2. Preferred location of notch is at top of member.

STRUCTURE BRACING

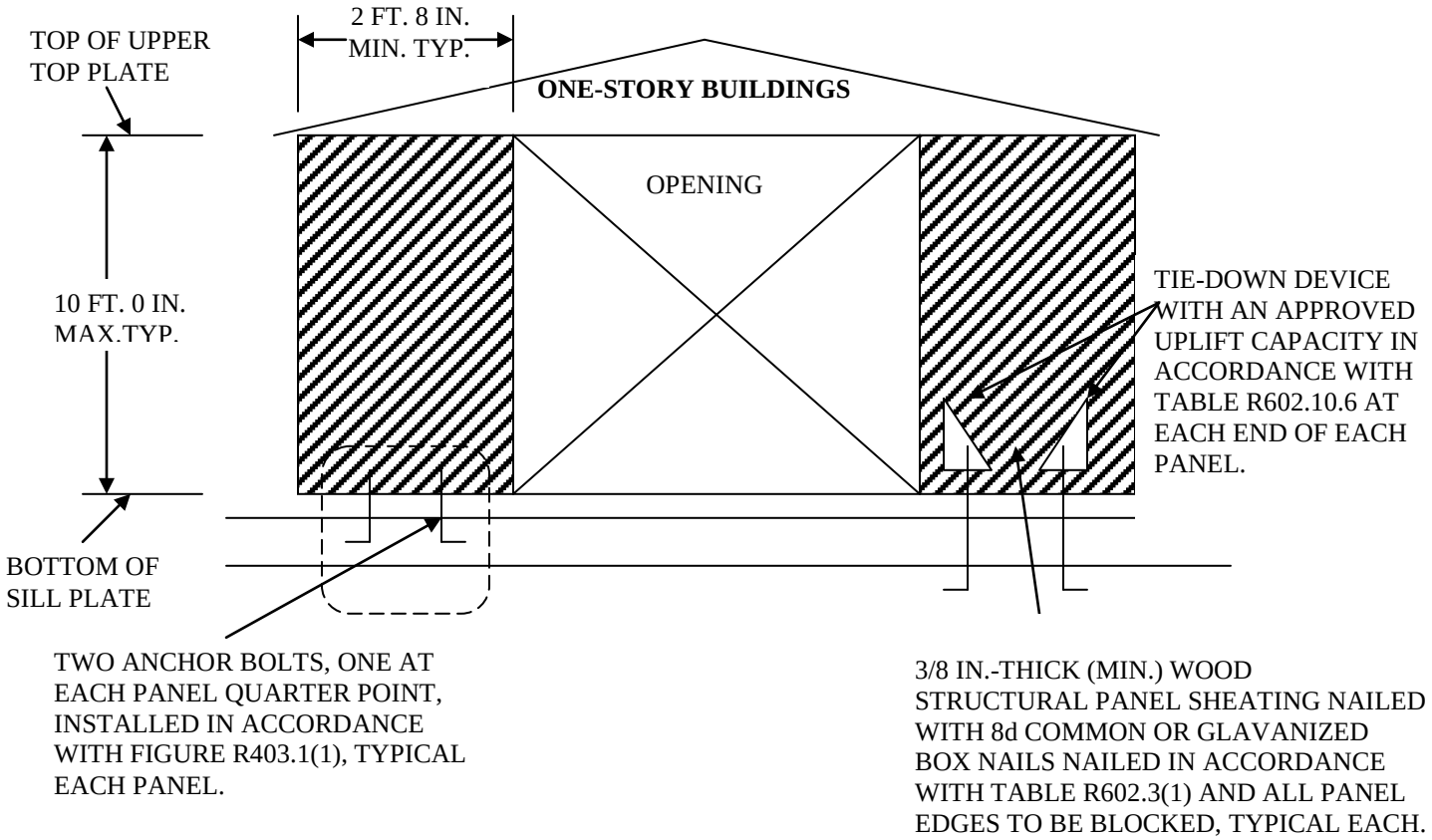

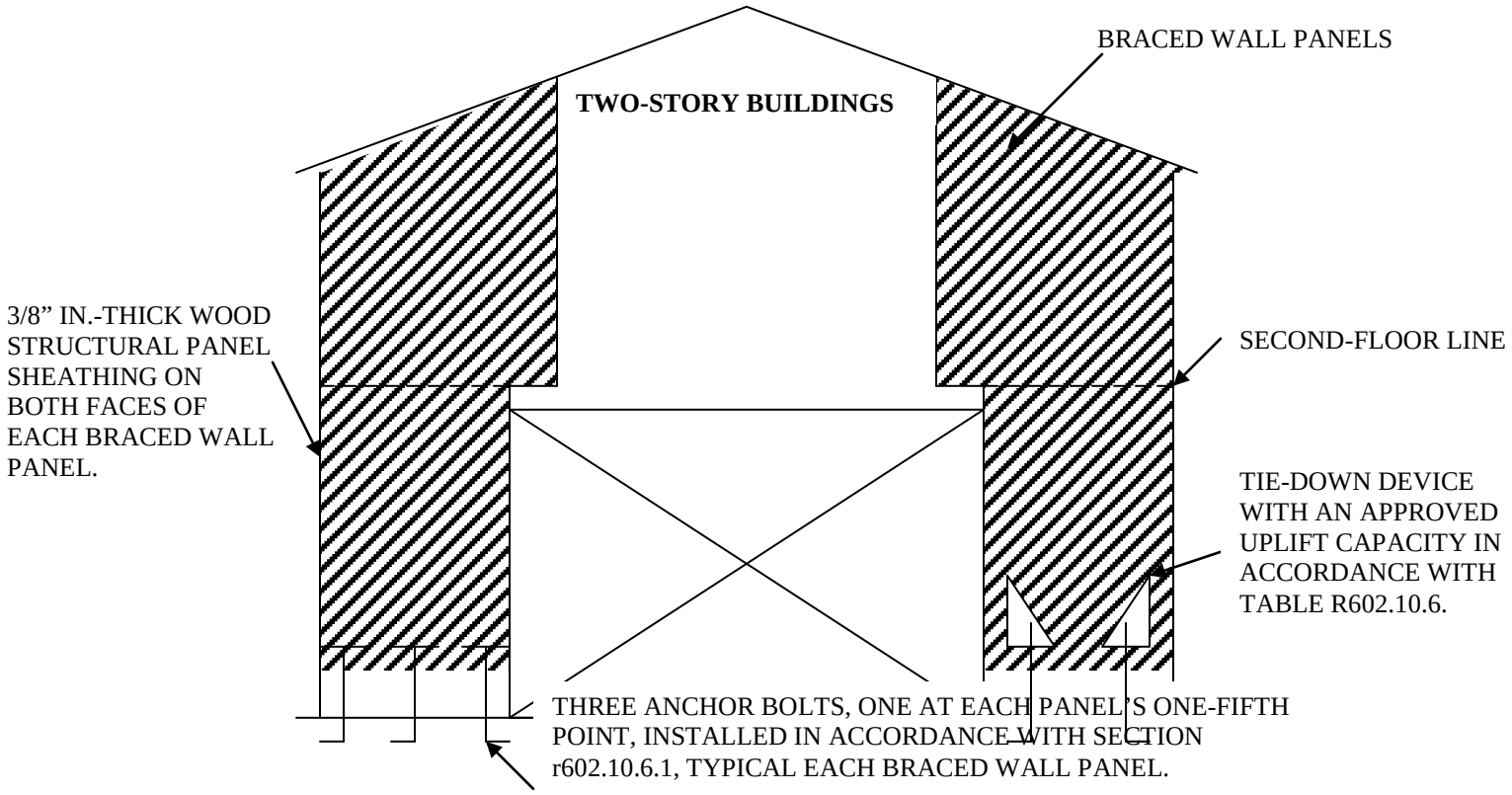

R602.10.6.1 Alternate braced wall panels. Alternate braced wall lines constructed in accordance with one of the following provisions shall be permitted to replace each 4 feet of braced wall panel as required by section R602.10.4.

1. In one-story buildings, each panel shall be sheathed on one face with 3/8-inch-minimum-thickness (9.5 mm) plywood sheathing nailed with 8d common or galvanized box nails in accordance with Table R602.3(1) and blocked at all wood structural panel sheathing edges. Two anchor bolts installed in accordance with Figure R403.1 (1) shall be provided in each panel. Anchor bolts shall be placed at panel quarter points. Each panel end stud shall have a tie-down device fastened to the foundation, capable of providing an approved uplift capacity in accordance with Table R602.10.6. The tie-down device shall be installed in accordance with the manufacturer's recommendations. The panels shall be supported directly on a foundation or on floor framing supported directly on a foundation, which is continuous across the entire length of the braced wall line. This foundation shall be reinforced with not less than TWO No. 4 bars.

2. In the first story of two-story buildings, each braced wall panel shall be in accordance with item 1 above, except that the wood structural panel sheathing shall be installed on both faces, sheathing edge nailing spacing shall not exceed 4 inches on center, at least three anchor bolts shall be placed at one-fifth points.

Table R602.10.6

Minimum Widths And Tie-Down Forces Of Alternate Braced Wall Panels

Tie-Down Forces (lb)	Height Of Braced Wall Panel				
	Sheathed Width				
	8 ft. 2' – 4"	9 ft. 2' – 8"	10 ft. 2' – 8"	11 ft. 3' – 2"	12 ft. 3' – 6"
R602.10.1,Item 1	1800	1800	1800	2000	2200
R602.10.1,Item 2	3000	3000	3000	3300	3300

Examples Of Tie-Down Devices

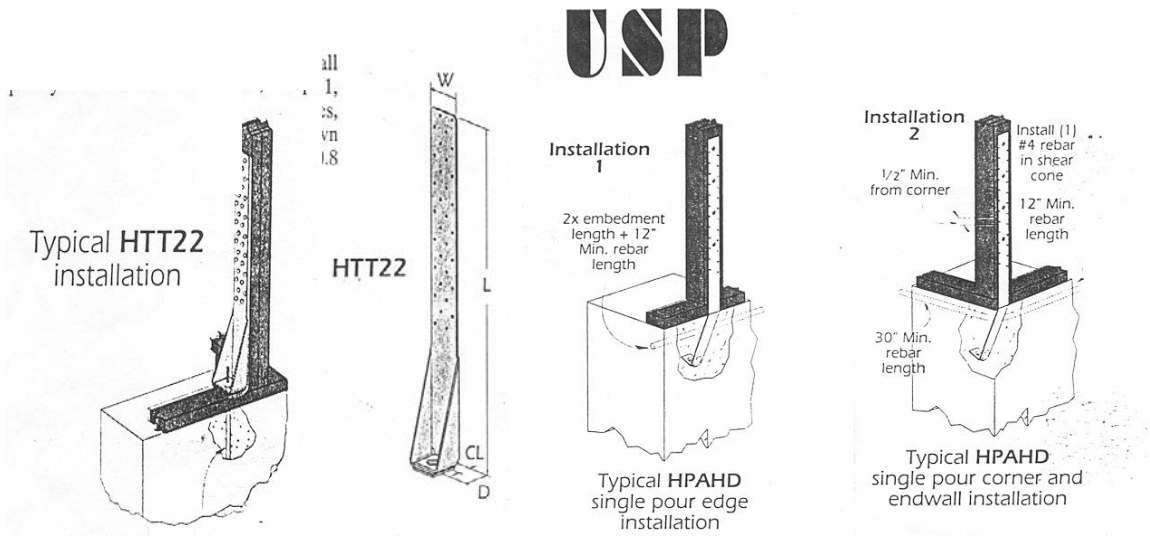

R602.10.6.2 Alternate braced wall panel adjacent to a door or window. Alternate braced wall panels constructed in accordance with one of the following provisions are also permitted to replace each 4 feet of braced wall panel as required by R602.10.4 for use adjacent to a window or door opening with a full-length header:

1. In one-story buildings, each panel shall have a length of not less than 16 inches and a height of not more than 10 feet. Each panel shall be sheathed on one face with a single layer of 3/8 inch-minimum-thickness wood structural panel sheathing nailed with 8d common or galvanized box nails in accordance with Figure R602.10.6.2. The wood structural panel sheathing shall extend up over the solid sawn or glued-laminated header and shall be nailed in accordance with Figure R602.10.6.2. Use of a built-up header consisting of at least two 2 x 12s and fastened in accordance with Table R602.3 (1) shall be permitted. A spacer, if used, shall be placed on the side of the built-up beam opposite the wood structural panel sheathing. The header shall extend between the inside faces of the first full-length outer studs of each panel. The clear span of the header between the inner studs of each panel shall be not less than 6 feet and not more than 18 feet in length. A strap with an uplift capacity of not less than 1000 pounds shall fasten the header to the side of the inner studs opposite the sheathing. One anchor bolt not less than 5/8-inch-diameter and installed in the center of each sill plate. The studs at each end of the panel shall have a tie-down device fastened to the foundation with an uplift capacity of not less than 4,200 pounds.
   Where a panel is located on one side of the opening, the header shall extend between the inside face of the first full-length stud of the panel and the bearing studs at the other end of the opening. A strap with an uplift capacity of not less than 1000 pounds shall fasten the header to the bearing studs. The bearing studs shall also have a tie-down device fastened to the foundation with an uplift capacity of not less than 1000 pounds. The tie-down devices shall be an embedded strap type, installed in accordance with the manufacturer's recommendations. The panel shall be directly supported on a continuous foundation, with a minimum 12 x12 continuous footing or turned down slab edge.
2. In the first story of two-story buildings, each wall panel shall be braced in accordance with Item 1 above, except that each panel shall have a length of not less than 24 inches.

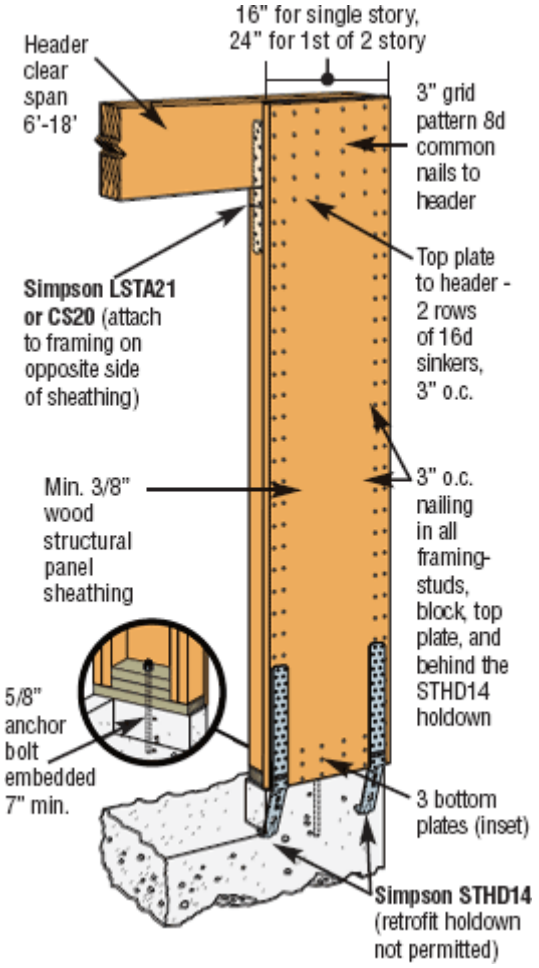

← Example

Suggested Roof Bracing

Trusses used on dwellings require an engineered design by an approved fabricator, unless specifically approved by the Building Official.

Dwellings and attached garage roofs shall be designed for a 40-lb/sq ft live load. Detached garages may be designed for a 30-lb/sq ft live load.

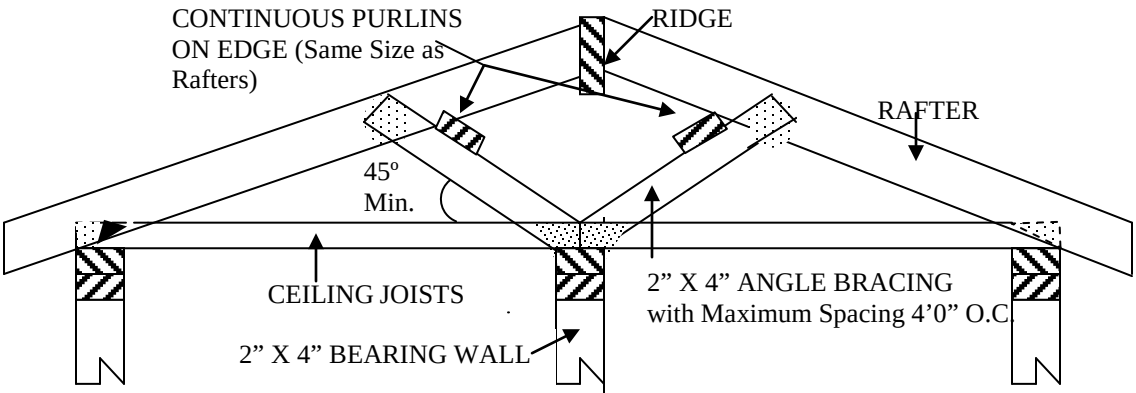

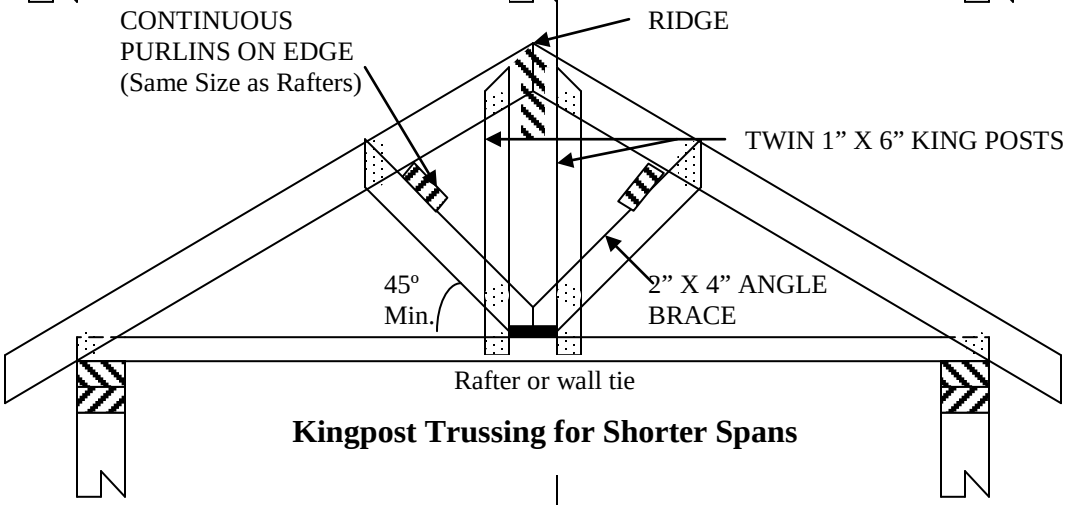

Kingpost Trussing for Shorter Spans

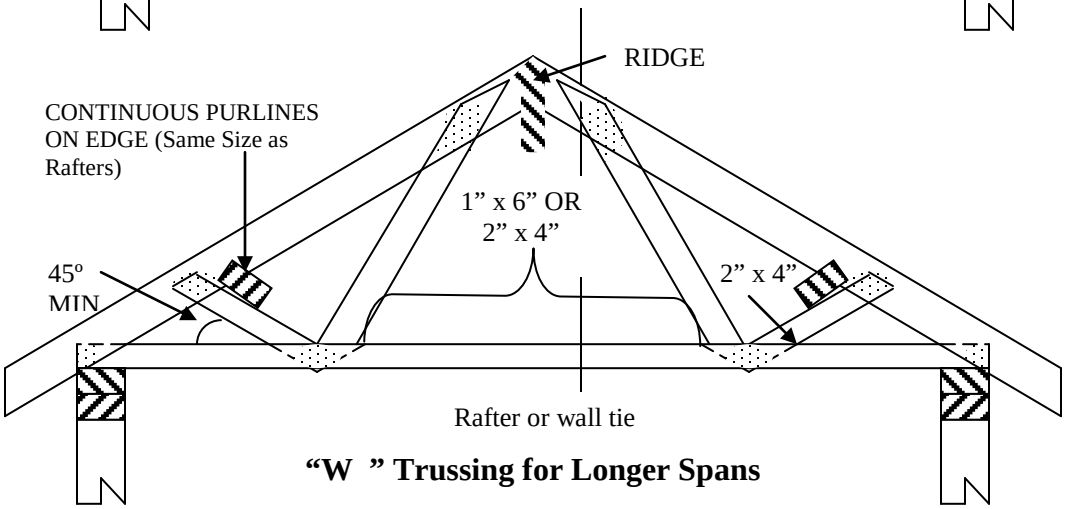

"W " Trussing for Longer Spans

GUIDELINES: Stairways

The largest tread width or riser height within any stairway shall not exceed the smallest by more than 3/8 inch.

Headroom

Every stairway shall have a headroom clearance of not less than 6 feet 8 inches. Such clearance shall be measured vertically from a plane parallel and tangent to the stairway tread nosing to the soffit above all points.

Handrails

The top shall be placed not less than 34 inches nor more than 38 inches above the nosing of the treads. The handrail shall be continuous the full length of the stairs. Ends shall be returned or terminated in newel posts or safety terminals.

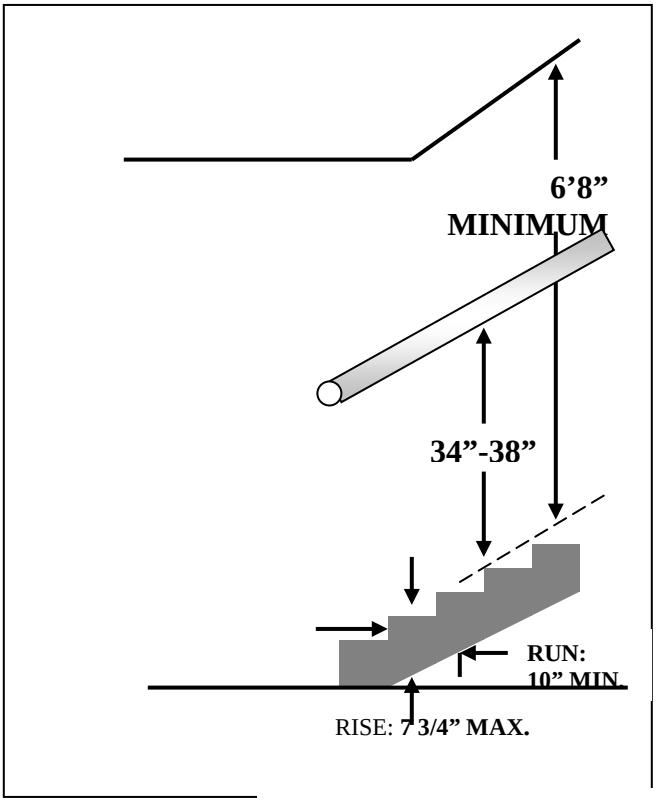

Handrail grip size

All required handrails shall be one of the following types or shall provide equivalent graspability.

a. Type 1. Handrails with a circular cross section shall have an outside diameter of at least 1 ¼ inches and not greater than 2 inches. If the handrail is not circular, it shall have a perimeter dimension of at least 4 inches and not greater than 6 ¼ inches with a maximum cross section dimension of 2 ¼ inches.

b. Type 2. Handrails with a perimeter greater than 6 ¼ inches shall provide a graspable finger recess area on both sides of the profile. The finger recess shall begin within a distance of ¾ inch measured vertically from the tallest portion of the profile and achieve a depth of at least 5/16 inch within 7/8 inch below the widest portion of the profile. This required depth shall continue for at least 3/8 inch to a level that is not less than 1 ¾ inches below the tallest portion of the profile. The minimum width of the handrail above the recess shall be 1 ¼ inches to a maximum of 2 ¾ inches. Edges shall have a minimum radius of 0.01 inch.

Handrail details

Other shapes may be acceptable if they provide equivalent grasping service

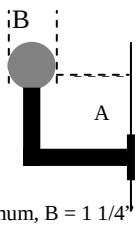

Type 1. A = 1 1/2" Minimum, B = 1 1/4" to 2" Minimum

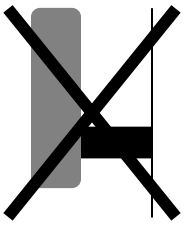

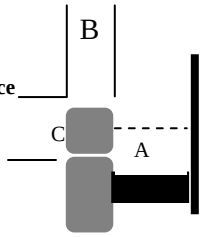

Type 2. A=1 ½" Minimum, B=1 ¼" to 2 ¾"Minimum, C=3/4" Minimum

NOTE: REQUIRED HANDRAILS ARE NOT SHOWN

WINDING STAIRWAY

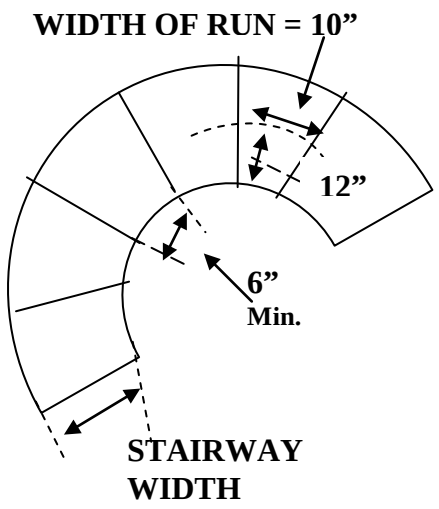

Winder treads shall have a minimum tread depth of 10 inches measured as above at a point 12 inches from the side where the treads are narrower. Winder treads shall have a minimum tread depth of 6 inches at any point. Within any flight of stairs, the largest winder tread depth at the 12 inch walk line shall not exceed the smallest by more than 3/8 inches.

SPIRAL STAIRWAY

Spiral stairways are permitted, provided the minimum width shall be 26 inches with each tread having a 7 ½ inches minimum tread depth at 12 inches from the narrower edge. All treads shall be identical, and the rise shall be no more than 9 ½ inches. A minimum headroom of 6 feet 6 inches shall be provided.

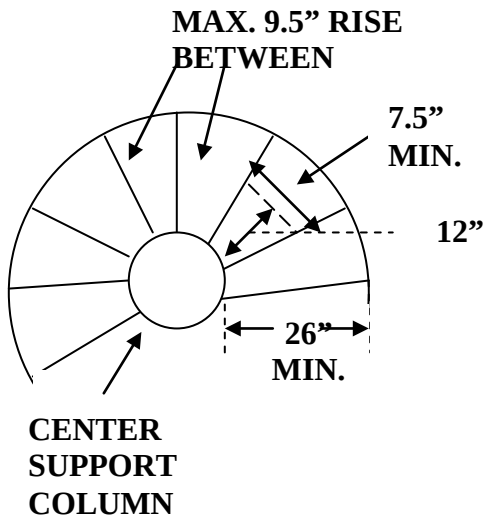

Remodeling? Adding On?

When alterations, repairs, or additions requiring a permit occur or when one or more sleeping rooms are added or created in a dwelling…

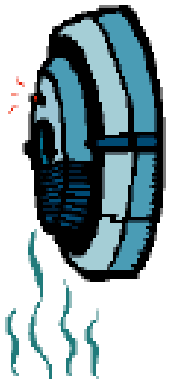

SMOKE ALARMS ARE REQUIRED!

Smoke alarms are not required if the work being done is **exclusively** on the exterior of the house. Examples are re-roofing, residing, decks.

What Kind?
Smoke alarms may be battery operated in existing bedrooms. Smoke detectors installed in new bedrooms must receive their primary power from the building and wiring AND be equipped with a battery backup.

Where to Locate?

Smoke alarms shall be mounted on the ceiling or wall at a point centrally located in the hallway AND within EACH sleeping room AND in the basement AND all levels. Manufacturer's instructions must be followed for proper location.

On multi-level houses, install one smoke alarm on each level, minimum, in addition to one in each sleeping room & adjacent hallway to each sleeping room.

Alarms shall sound an alarm audible in all sleeping rooms.

AUTOMATIC GARAGE DOOR OPENING SYSTEMS

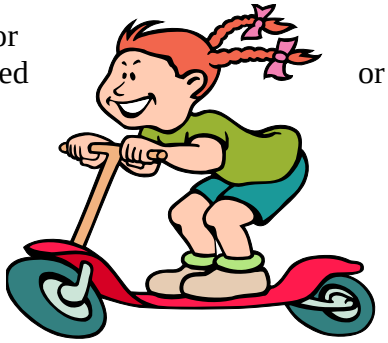

Beginning January 1, 1993, all residential automatic garage door opening systems that are manufactured, sold, purchased, installed or repaired in Minnesota must include an attached edge sensor, safety beam, or similar device. When activated, the device also must be designed to prevent the door from closing if the device fails.

If an automatic garage door system does not have this safety device, or if the safety device does not function, the repairperson must tag the system with a warning tag outlining the problem. The firm or person placing the tag also must notify the occupant of the residence within 10 days that the system does not comply with this standard.

NOTE:
The carton, as well as the mechanism, must be labeled or listed as meeting the Standard for Safety UL 325.

Questions?

Contact the City of Maplewood
Environmental & Economic Development Department
1902 County Road B East
Maplewood, MN 55109
(651) 249-2300
Fax (651) 249-2319