BUILDING A DECK

Maplewood

BUILDING DEPARTMENT
(651)249-2300
www.MaplewoodMN.gov

This handout is intended only as a guide and is based in part on the 2015 Minnesota Residential Code, Maplewood City ordinances, and good building practice. While every attempt has been made to ensure the correctness of this handout, no guarantees are made to its accuracy or completeness. Responsibility for compliance with applicable codes and ordinances falls on the owner or contractor. For specific questions regarding code requirements, refer to the applicable codes or contact your local Building Department.

BUILDING PERMITS

Building permits are required for decks with the following exception: freestanding decks, regardless of size, if they are not more than 30 inches above adjacent grade. Freestanding decks do not require footings that extend below the frost depth. Decks built without a permit still need to meet zoning requirements and meet building code.
Building permits are not required for ground level patios made of concrete or pavers.
Building permits can be obtained from the Building Department by filling out an application and submitting your building plans and site plan. Building permits are typically processed within 7 business days of receiving a complete set of plans.

PERMIT EXPIRATION

If you suspend work on your deck for more than 180 days after permit issuance or your last inspection, your permit will expire. If unforeseen circumstances delay construction, contact the Building Department ***before*** your permit expires.

PLANS

It is very important that your plans depict exactly how your deck will be built. Plans must be neat and complete. Plans are reviewed for code compliance and a copy is returned to the applicant with notes to identify required corrections. ***PLEASE REVIEW THE PLANS WHEN THEY ARE RETURNED TO YOU SO THAT YOU WILL BE AWARE OF ANY CORRECTIONS NEEDED.*** Approved plans shall be on site at time of all inspections. You may wish to retain a copy of your approved plans, permits, and inspection record cards for any future needs.

INSPECTIONS

1. Call 1 day in advance.
2. Have address, permit number, and type of inspection (ex. footing) ready.
3. Let scheduler know time frame am, pm or anytime.
4. Footing Inspection - Holes dug, loose material/water removed. ***Plans and record card must be onsite.***
5. Framing inspection and anchoring is required on decks low to the ground before decking is placed.
6. Final Inspection - All work complete and all stairs, handrails, and guards in place. ***Plans and record card must be onsite. Installation instructions for composite decking must be on site.***
7. If work is approved, the inspector will sign the record card and you may proceed with the next step.
8. If corrections are noted, a correction notice will be left on the site.

Please do not hesitate to call the Building Department at (651) 249-2300 if you have questions. If necessary, we will be happy to meet with you on the site to help resolve any concerns or problems.

TERMINOLOGY

1. RAIL TOP CAP
2. BALLUSTERS
3. RAIL POST
4. SUPPORT POST
5. RIM OR BAND JOIST
6. DECKING
7. JOISTS
8. POST BASE CONNECTOR
9. PIER
10. FOOTING
11. DROP BEAM
12. BLOCKING
13. HOUSE JOIST
14. ½" BOLTS
15. LEDGER BOARD
16. FLASHING

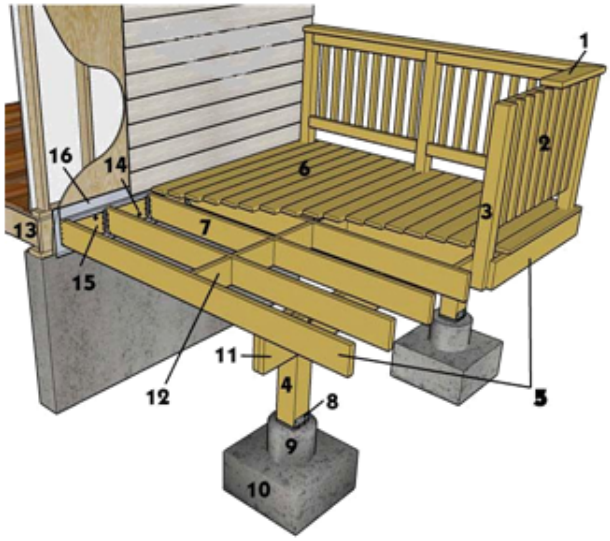

THINK YOU MIGHT ENCLOSE YOUR DECK IN THE FUTURE?

Deck plans are approved on the assumption that the deck will be used only as a deck for the life of the structure. Because footing sizes, setbacks, structural supports, and a host of other deck components are different for enclosed spaces than they are for decks, it is important that you indicate on your plans the desire to convert the deck at a future date. You should then design your deck to carry future loads and meet setbacks and other rules.

ZONING REGULATIONS

Decks are permitted as an addition to a single family dwelling. Decks must be at least five feet from the side and rear lot line. Decks in front yard must be at least 30 feet from the front lot line or no closer then adjacent house setbacks. Setbacks are checked as a part of the plan review and again at the time of the footing inspection. ***Easements, wetland buffers and other lot restrictions may require greater setbacks than permitted by the zoning ordinance.*** The most restrictive setback applies. ***Questions regarding zoning regulations should be directed to the Planning Office at 651-249-2300.***

SURVEY MARKER EXAMPLES

SETBACKS

(Exception: Wetlands & Shoreline

- Deck can never be in easement.
- Decks may be 5' from rear and side lot lines and 30' from front lot line or no closer than adjacent house.
- Decks with roofs must meet the setback requirements for a dwelling.

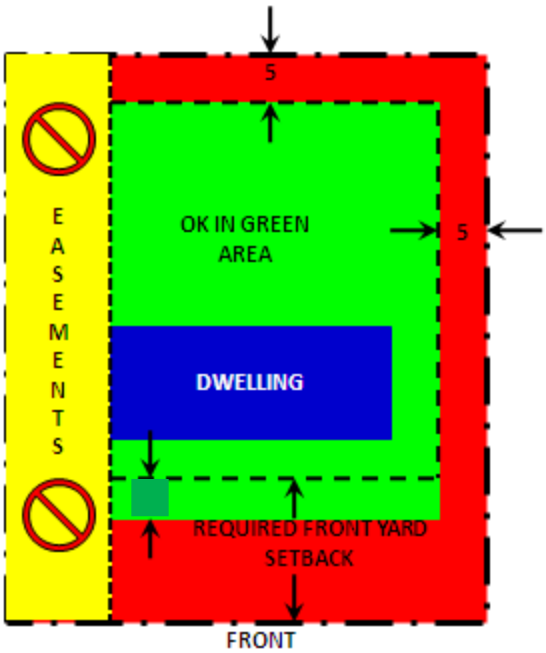

Call Gopher State One Call for utility locations at least two working days before you dig – 1-800-252-1166 or 651-454-0002.

MATERIALS

Fasteners

Nails and other hardware must be hot-dipped zinc-coated (galvanized), stainless steel or equal. Screws should be either hot-dipped galvanized or electroplated with a polymer coating. 12d nails are recommended on nominal 2-inch decking. 10d nails are recommended for 5/4" decking.

With lag screws, use a flat washer under the head. Use washers under the nut and head of machine bolts and just under the nut of carriage bolts.

Lumber

All wood used in deck construction must be pressure treated lumber or wood that is naturally resistant to decay such as redwood or cedar.

Wood used above ground, in contact with the ground, or below ground requires different degrees of treatment. Check the labels of the material you are buying to determine where it can be used. ***Because some preservative treatments are very corrosive, make sure that any fasteners or metal connectors used in the construction of your deck are approved by the manufacturer for use with treated wood.***

Decking

Materials commonly used for decking include standard dimension lumber (either 2X4 or 2X6), radius-edged decking, or a manufactured decking product.

Radius-edged Patio Decking (5/4 decking) has been specifically developed for outdoor decks. ***Redwood and cedar patio decking is intended to be used flat-wise in load-bearing applications where spans do not exceed 16" o.c. (12" o.c. when installed diagonally to joists). Southern pine decking may span 24" o.c. or 16" o.c. when installed diagonally to joists.***

Manufactured decking products may be used only when meeting ASTM D 7032 or when approved by the Building Department. Approval is based on the material carrying an ICC Evaluation Services Report. Decking without a report will not be approved. Ask the decking supplier to provide you with a copy of the research report. The Building Department maintains a list of composite decking materials that meet US building codes that is available upon request. ***Caution – some manufactured deck products are approved for decking but not for stair treads. In some cases where manufactured decking is approved for stairs, the spacing of supports may be significantly reduced compared to use on the deck itself. Read the research report for further information.***

MAXIMUM DECK BOARD SPANS	
2x6 OR 5/4 SOUTHERN PINE PERPENDICULAR TO JOIST	24" O.C.
5/4 CEDAR OR REDWOOD AND 2X4 PERPENDICULAR TO JOIST OR 5/4 SOUTHERN PINE OR 2X6 AT 45 DEGREES TO JOIST	16" O.C.
5/4 AND 2X4 AT 45 DEGRESS TO JOIST	12" O.C.

COMPOSITES AND OTHER DECK/RAILING PRODUCTS

Wood/plastic composites used for exterior deck boards, stair treads, handrails and guardrail systems must bear labels indicating compliance with ASTM D 7031 or a current ICC Evaluation Services Report must be made available.
Wood/plastic composites complying with ASTM D 7031 must be installed in accordance with the manufacturer's written installation instructions.
Wood/plastic composites having an ICC ES Report must be installed in accordance with the manufacturer's installation instructions and the report.
READ THE INSTRUCTIONS AND THE REPORTS CAREFULLY. ALL PRODUCTS HAVE SPECIFIC REQUIREMENTS FOR STAIR TREADS. SOME ARE LIMITED TO INSTALLATION PERPENDICULAR TO JOISTS ONLY.

FOOTINGS

A 4x4 column can be used up to 7' in height. Post footings supporting columns must be 8-inch diameter or larger. The bottom of post footings may be "belled" to achieve the desired minimum bearing area. The base of the footing must be at least 42 inches below finished grade. Rebar is recommended. Center the column on the footing secured by a pin or connector. Posts imbedded in the ground must be 60% C.C.A. or equal. Using a fiberboard tube will allow elevation of the top of the footing above finished grade to provide protection of the wood post from lawn mowers and trimmers.

UNDERSTANDING LOAD PATHS

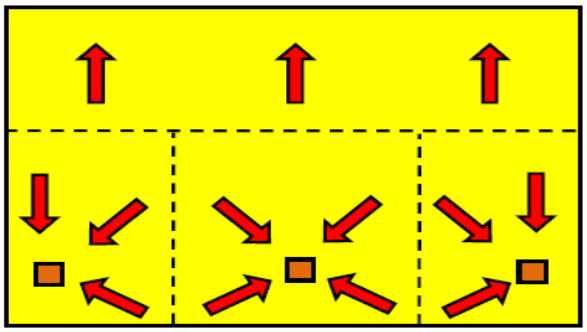

Loads are assumed to be uniform across the floor

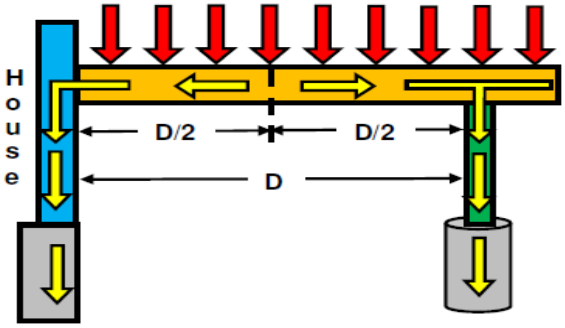

Deck footings should be sized according to the following table. Footings must extend ***at least 42 inches below grade*** (frost line) except for decks that are not connected to a dwelling. ***The minimum compressive strength of concrete used for deck footings is <u>5000 psi</u>.***

DECK FOOTING SIZES (1500 psf soils) – NOT FOR USE WITH HOT TUBS							
Max. Area of Deck Supported in Sq Ft	**Footing Diameter Required in Inches**	**Max. Area of Deck Supported in Sq Ft**	**Footing Diameter Required in Inches**	**Max. Area of Deck Supported in Sq Ft**	**Footing Diameter Required in Inches**	**Max. Area of Deck Supported in Sq Ft**	**Footing Diameter Required in Inches**
10	**8**	**23**	**12**	**41**	**16**	**65**	**20**
13	**9**	**27**	**13**	**47**	**17**	**72**	**21**
16	**10**	**32**	**14**	**53**	**18**	**79**	**22**
19	**11**	**36**	**15**	**59**	**19**	**86**	**23**

THE REQUIRED AREA OF THE COLUMN SHOULD FULLY BEAR ON THE FOOTING

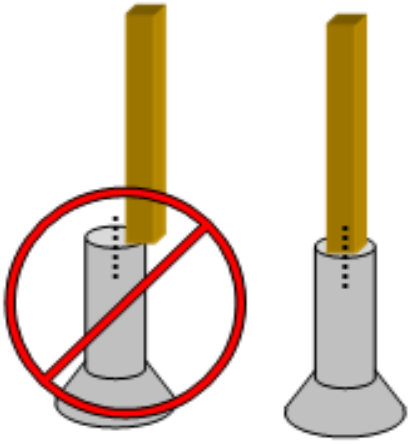

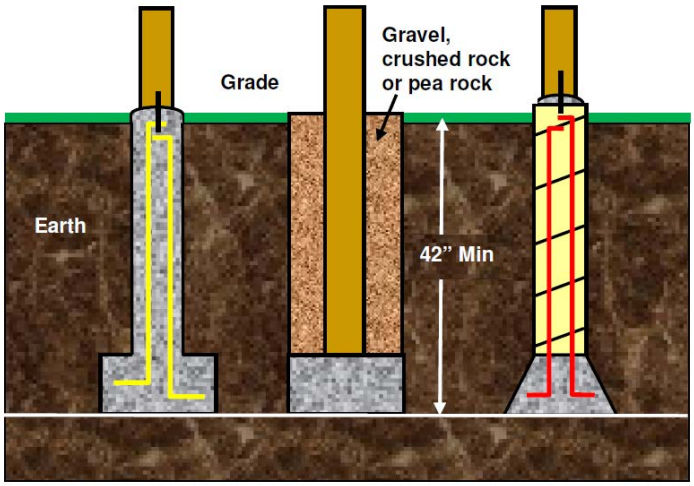

The minimum compressive strength of concrete used for deck footings is <u>5000 psi</u>.

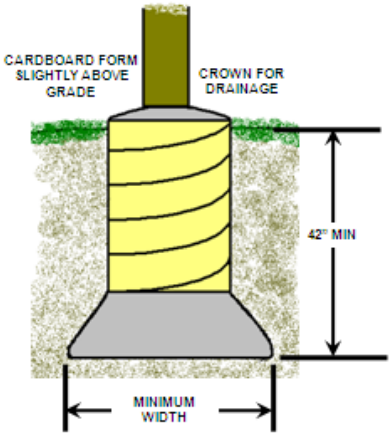

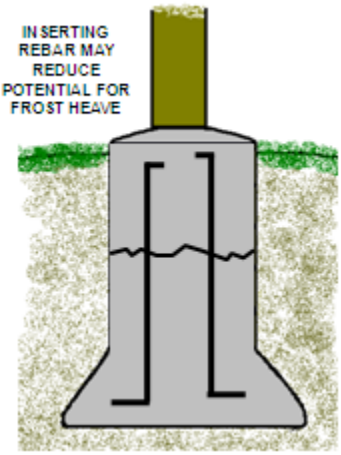

WHERE DO I PUT MY FOOTINGS?

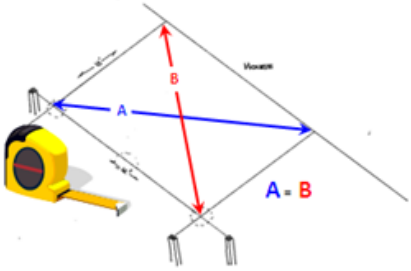

STRING LINES TO SQUARE DECK

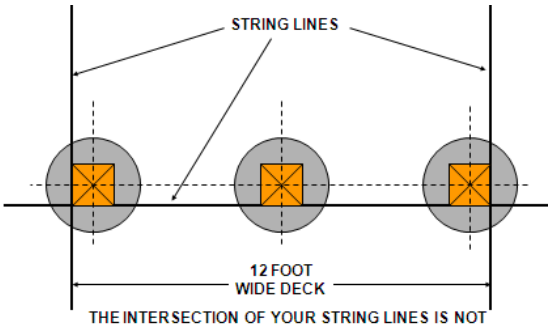

THE INTERSECTION OF YOUR STRING LINES IS NOT THE CENTER OF THE FOOTING. ADJUST ACCORDING TO THE LOCATION AND SIZE OF YOUR COLUMN.

ANCHORING POST BASE

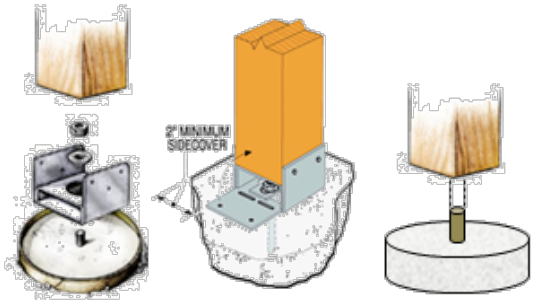

DECK FRAMING

ATTACHMENT OF LEDGER BOARD TO *WOOD JOISTS (2X6, 2X8, 2X10, 2X12)*

Make sure ledger is securely attached to the dwelling. Install metal flashing at top and caulk sides.

TABLE R507.2
FASTENER SPACING FOR A SOUTHERN PINE OR HEM-FIR DECK LEDGER AND A 2-INCH-NOMINAL SOLID-SAWN SPRUCE-PINE-FIR BAND JOIST[c, f, and g]
(Deck live load = 40 psf, deck dead load = 10 psf)

JOIST SPAN	6' and less	6'1" to 8'	8'1" to 10'	10'1" to 12'	12'1" to 14'	14'1" to 16'	16'1" to 18'
Connection details	On-center spacing of fasteners[d and e]						
½ inch diameter lag screw with $^{15}/_{32}$ inch maximum sheathing[a]	30	23	18	15	13	11	10
½ inch diameter bolt with $^{15}/_{32}$ inch maximum sheathing	36	36	34	29	24	21	19
½ inch diameter bolt with $^{15}/_{32}$ inch maximum sheathing and ½ inch stacked washers[b, h]	36	36	29	24	21	18	16

a. The tip of the lag screw shall fully extend beyond the inside face of the band joist.
b. The maximum gap between the face of the ledger board and face of the wall sheathing shall be ½ inch.
c. Ledgers shall be flashed to prevent water from contacting the house band joist.
d. Lag screws and bolts shall be staggered in accordance with Section R507.2.1.
e. Deck ledger shall be minimum 2 × 8 pressure-preservative-treated No. 2 grade lumber, or other approved materials as established by standard engineering practice.
f. When solid-sawn pressure-preservative-treated deck ledgers are attached to a minimum 1-inch-thick engineered wood product (structural composite lumber, laminated veneer lumber or wood structural panel band joist), the ledger attachment shall be designed in accordance with accepted engineering practice.
g. A minimum 1 × 9½ Douglas Fir laminated veneer lumber rimboard shall be permitted in lieu of the 2-inch nominal band joist.
h. Wood structural panel sheathing, gypsum board sheathing or foam sheathing not exceeding 1 inch in thickness shall be permitted. The maximum distance between the face of the ledger board and the face of the band joist shall be 1 inch.

Capacity of lag or carriage bolts shall not exceed 400 lbs per bolt unless design provided.

TABLE 507.2.1
PLACEMENT OF LAG SCREWS AND BOLTS IN DECK LEDGERS AND BAND JOISTS
MINIMUM END AND EDGE DISTANCES AND SPACING BETWEEN ROWS

	TOP EDGE	BOTTOM EDGE	ENDS	ROW SPACING
Ledger[a]	2 inches[d]	¼ inch	2 inches[b]	1 ⅝ inches[b]
Band Joist[c]	¾ inches	2 inches	2 inches[b]	1 ⅝ inches[b]

a. Lag screws or bolts shall be staggered from the top to the bottom along the horizontal run of the deck ledger in accordance with Figure R507.2.1(1).
b. Maximum 5 inches.
c. For engineered rim joists, the manufacturer's recommendations shall govern.
d. The minimum distance from bottom row of lag screws or bolts to the top edge of the ledger shall be in accordance with Figure R507.2.1(1).

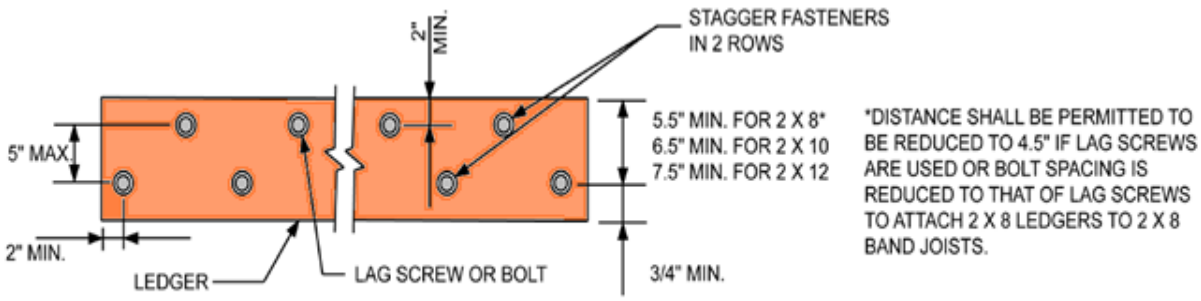

FIGURE R507.2.1(1)
PLACEMENT OF LAG SCREWS AND BOLTS IN LEDGERS

PLACEMENT OF LAG SCREWS AND BOLTS IN BAND JOISTS

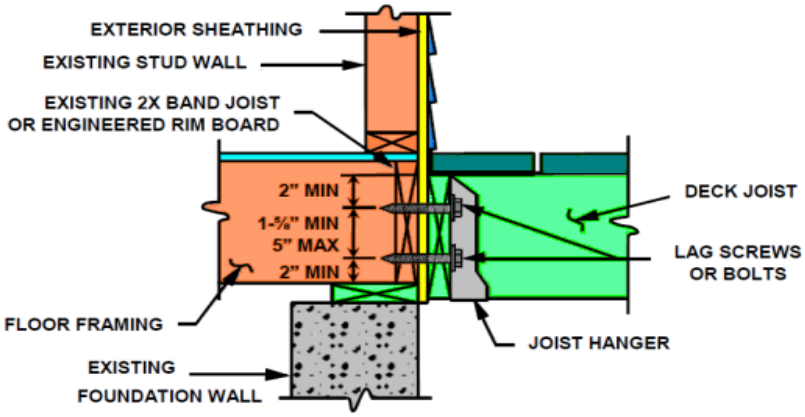

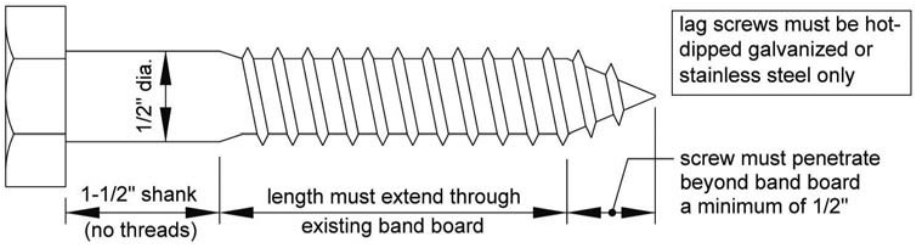

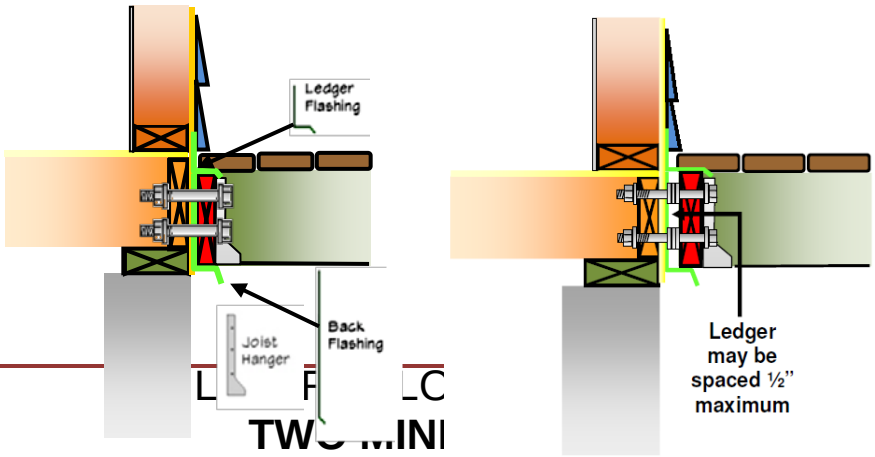

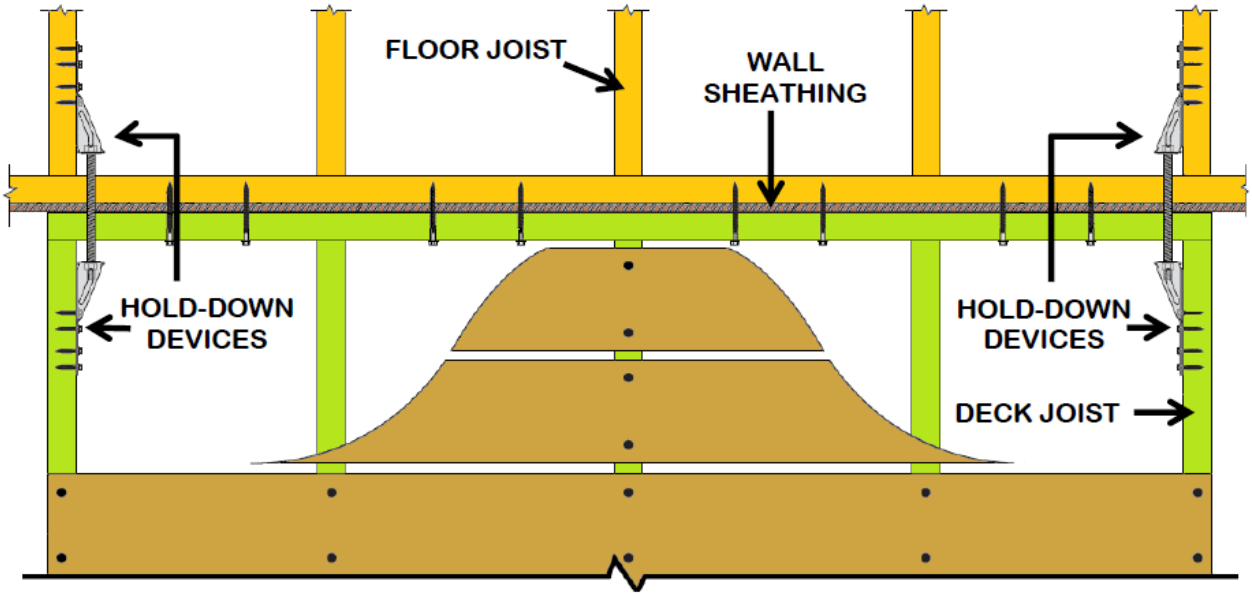

FLOOR JOISTS PERPENDICULAR TO DECK LEDGER

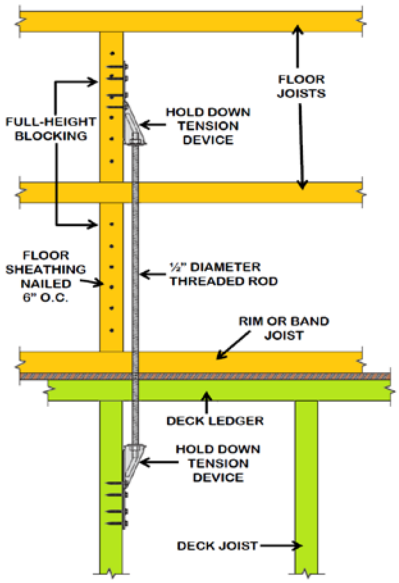

FLOOR JOISTS PARALLEL TO DECK LEDGER

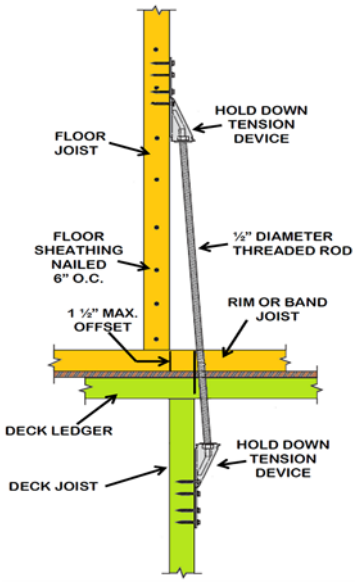

WHEN THERE IS NO ACCESS TO THE TOP OF THE FLOOR SHEATHING

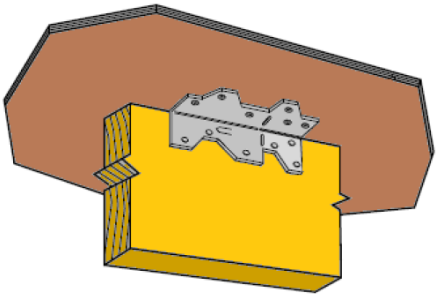

INSTALL APPROVED CONNECTORS PER THE MANUFACTURER'S INSTALLATION INSTRUCTIONS

IN ALL CASES, MANUFACTURER'S INSTALLATION INSTRUCTIONS MUST BE FOLLOWED

ACCESS DOOR TO SPACE ABOVE FINISHED BASEMENT CEILING

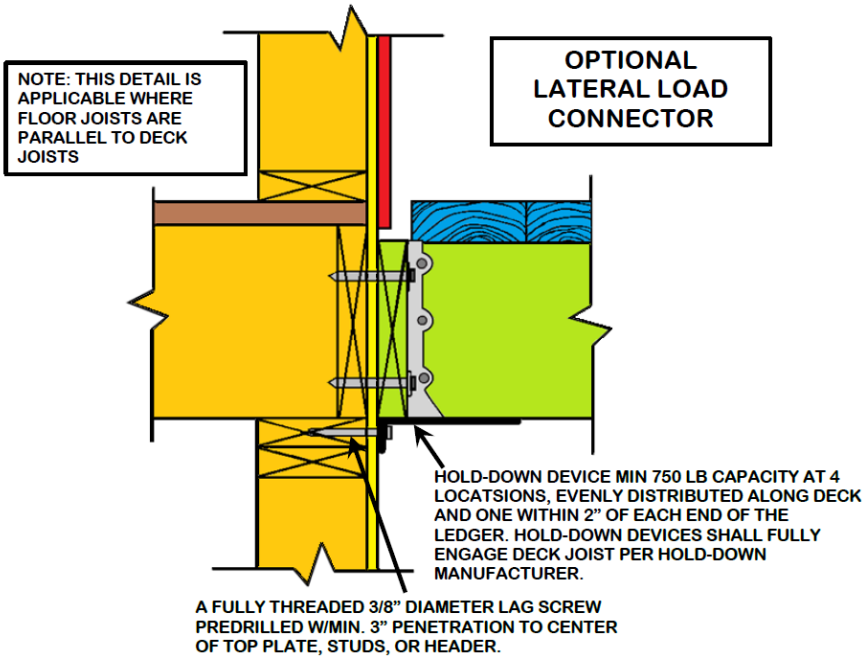

BEAMS

Construct beams using two or more 2 inch nominal pieces of lumber. Nail beams together using 10d nails at 32 inches o.c. along each edge of the beam and staggered. A spacer may be used to fir the beam to a 3½ -inch width. Beams should be installed with any arch or crown facing up. Attachments to columns should be with post caps designed for such use. Splices must occur over columns.

BEAM SPANS (Wet Service)
(Center of one column to center of next)
(Source AF&PA; rev. 8-17-10)

Species	Beam Size	Joist Spans						
		6’	8’	10’	12’	14’	16’	18’
Southern Pine	2-2X6	7’1”	6’2”	5’6”	5’0”	4’8”	4’4”	4’1”
	2-2X8	9’2”	7’11”	7’1”	6’6”	6’0”	5’7”	5’3”
	2-2X10	11’10”	10’3”	9’2”	8’5”	7’9”	7’3”	6’10”
	2-2X12	13’11”	12’0”	10’9”	9’10”	9’1”	8’6”	8’0”
	3-2X6	8’7”	7’8”	6’11”	6’3”	5’10”	5’5”	5’2”
	3-2X8	11’4”	9’11”	8’11”	8’1”	7’6”	7’0”	6’7”
	3-2X10	14’5”	12’10”	11’6”	10’6”	9’9”	9’1”	8’7”
	3-2X12	17’5”	15’1”	13’6”	12’4”	11’5”	10’8”	10’1”
Cedar, Redwood, Ponderosa Pine	2-2X6	5’5”	4’8”	4’2”	3’10”	3’6”	3’1”	2’9”
	2-2X8	6’10”	5’11”	5’4”	4’10”	4’6”	4’1”	3’8”
	2-2X10	8’4”	7’3”	6’6”	5’11”	5’6”	5’1”	4’8”
	2-2X12	9’8”	8’5”	7’6”	6’10”	6’4”	5’11”	5’7”
	3-2X6	7’4”	6’8”	6’0”	5’6”	5’1”	4’9”	4’6”
	3-2X8	9’8”	8’6”	7’7”	6’11”	6’5”	6’0”	5’8”
	3-2X10	12’0”	10’5”	9’4”	8’6”	7’10”	7’4”	6’11”
	3-2X12	13’11”	12’1”	10’9”	9’10”	9’1”	8’6”	8’1”

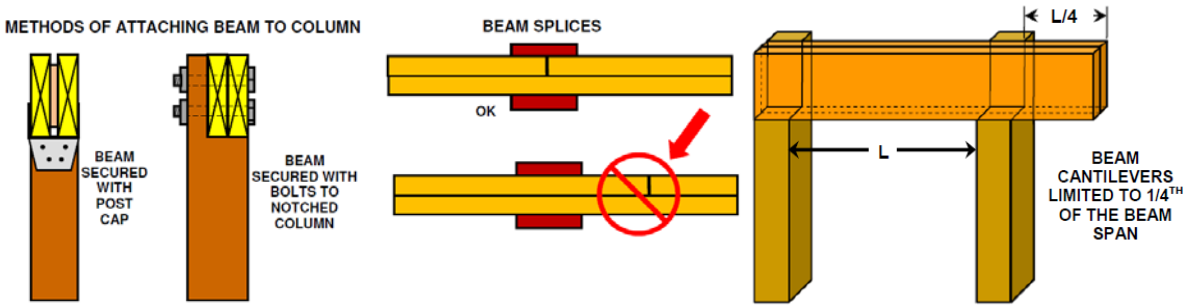

COLUMNS

MAXIMUM POST HEIGHT IN FEET															
SPECIES	SIZE	SQUARE FEET OF DECK SUPPORTED													
		36	48	60	72	84	96	108	120	132	144	156	165	180	192
SOUTHERN PINE	4X4	10	10	10	9	9	8	8	7	7	6	6	6	6	6
	4X6	14	14	13	12	11	10	10	9	9	8	8	8	7	7
	6X6	17	17	17	17	17	17	17	17	16	16	15	14	13	13
REDWOOD CEDAR	4X4	10	10	9	8	7	7	6	6	5	4				
	4X6	14	13	12	11	10	9	8	8	7	7	7	6	6	5
	6X6	17	17	17	17	17	16	13	7						

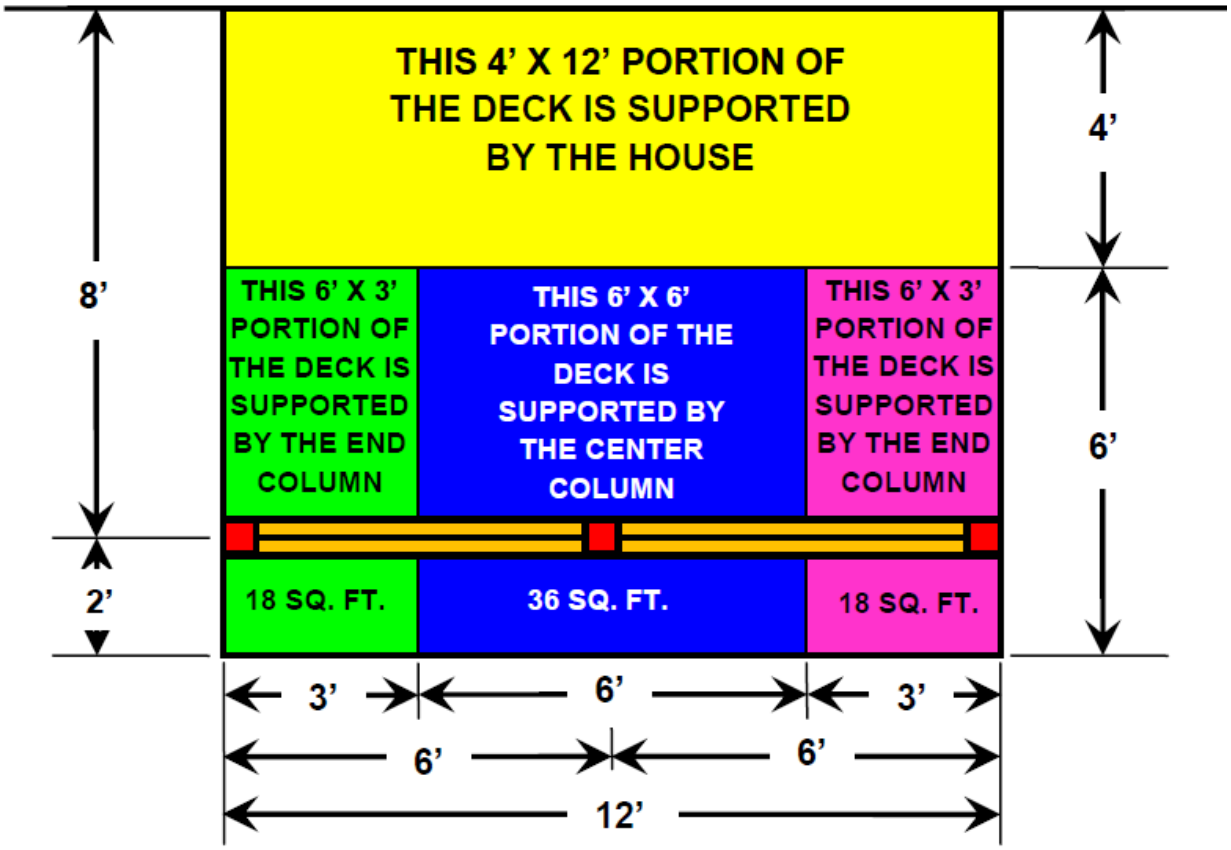

JOISTS

JOIST SPANS (Wet Service) (Source AF&PA; rev. 8-17-10)						
JOIST SIZE	SOUTHERN PINE			WESTERN CEDAR/PONDEROSA PINE		
	12" oc	16"oc	24"oc	12" oc	16"oc	24"oc
2X6	10'4"	9'5"	7'10"	8'10"	8'0"	7'0"
2X8	13'8"	12'5"	10'2"	11'8"	10'7"	8'8"
2X10	17'5"	15'10"	13'5"	14'11"	13'0"	10'7"
2X12	21'2"	18'10"	15'5"	17'5"	15'1"	12'4"

JOIST DETAILS

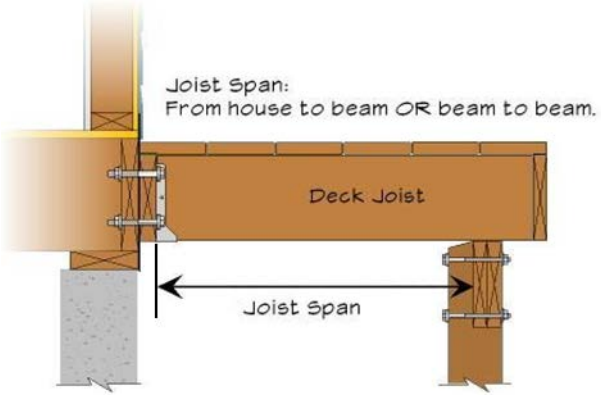

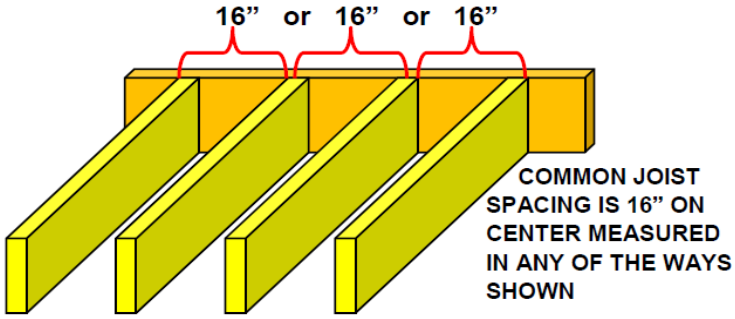

Joist spacing is determined by the type of decking used. 16" o.c. spacing must be used with 5/4 decking or when 2x6 or 2x4 decking is used at a 45° angle. 12" o.c. spacing required when 5/4 decking is used at a 45° angle.

WOOD DECKING

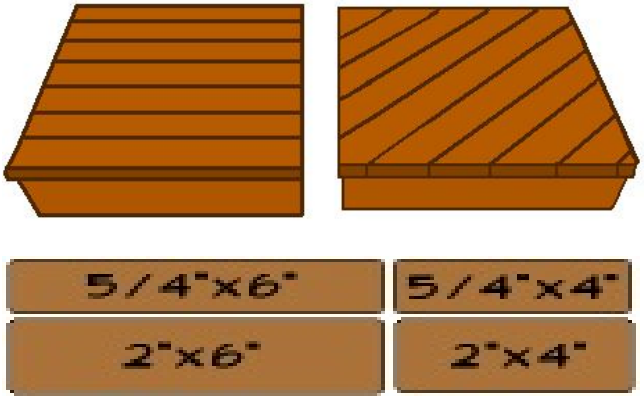

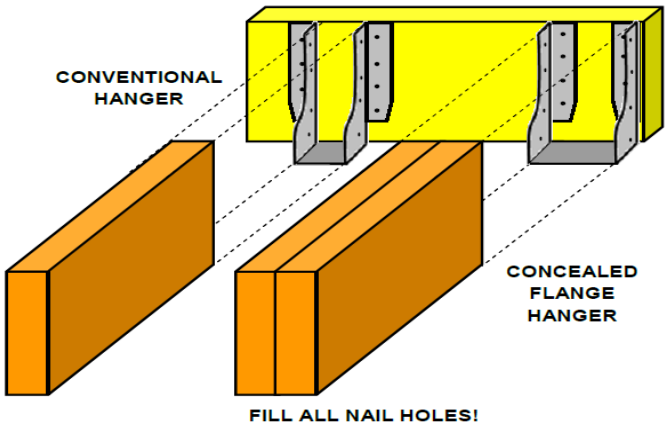

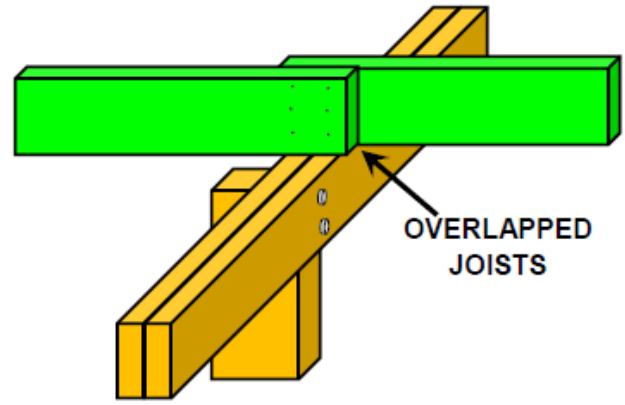

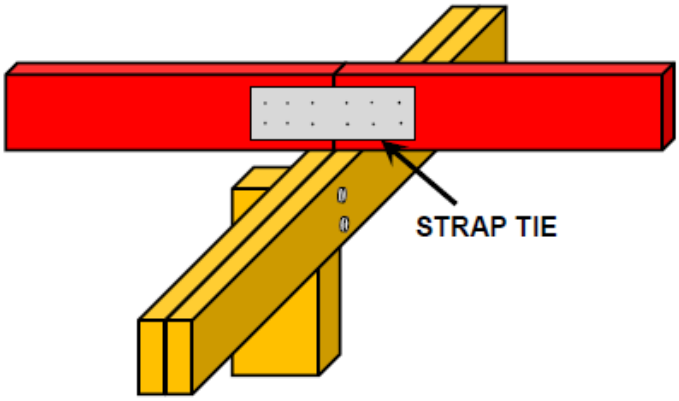

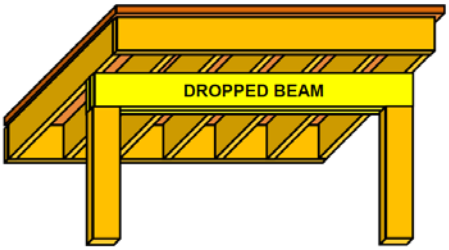

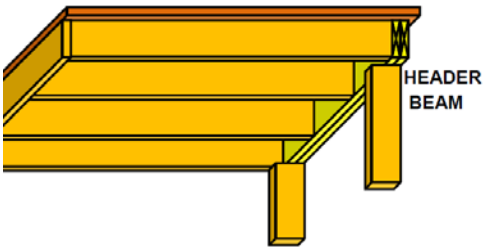

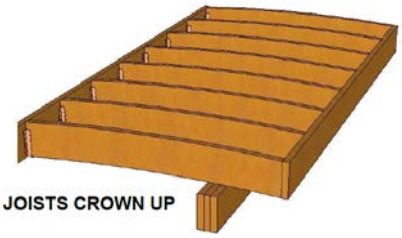

JOIST TO BEAM ATTACHMENTS

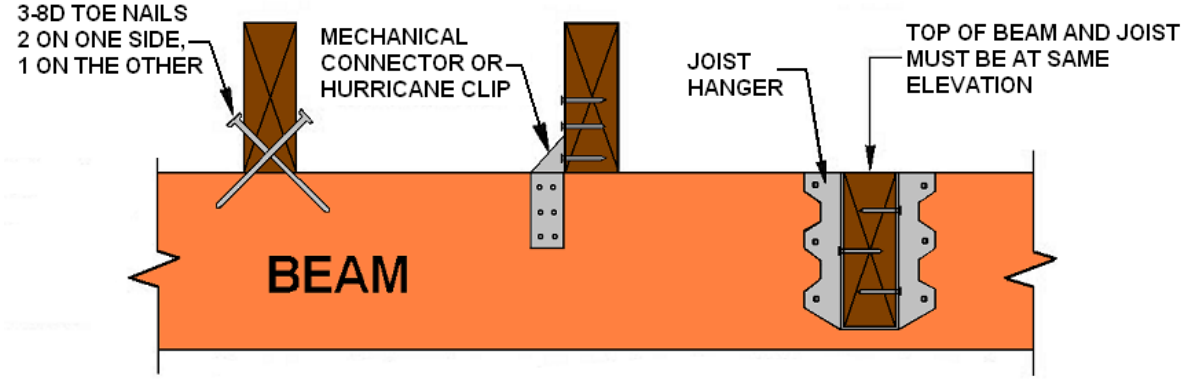

Joists must bear on a beam, ledger strip, or joist hangers. Joist hangers must be installed in accordance with the manufacturer's recommendations. ***Fill all nail holes in joist hangers.***

MAXIMUM CANTILEVER SPANS FOR JOISTS WITH BACKSPAN AT LEAST 2:1		
JOIST SIZE	SPACING O.C.	MAX. CANTILEVER
2X8	12”	39”
2X8	16”	34”
2X10	12”	57”
2X10	16”	49”
2X10	24”	40”
2X12	16”	67”
2X12	24”	54”

CANTILEVERS

THE AMOUNT OF CANTILEVER IS LIMITED BY THE SIZE AND SPACING OF THE JOIST AND THE LENGTH OF THE BACKSPAN

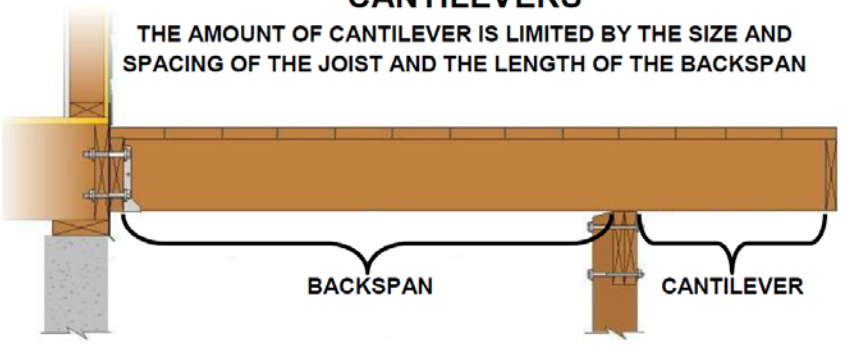

SPECIAL FLOOR FRAMING DETAILS

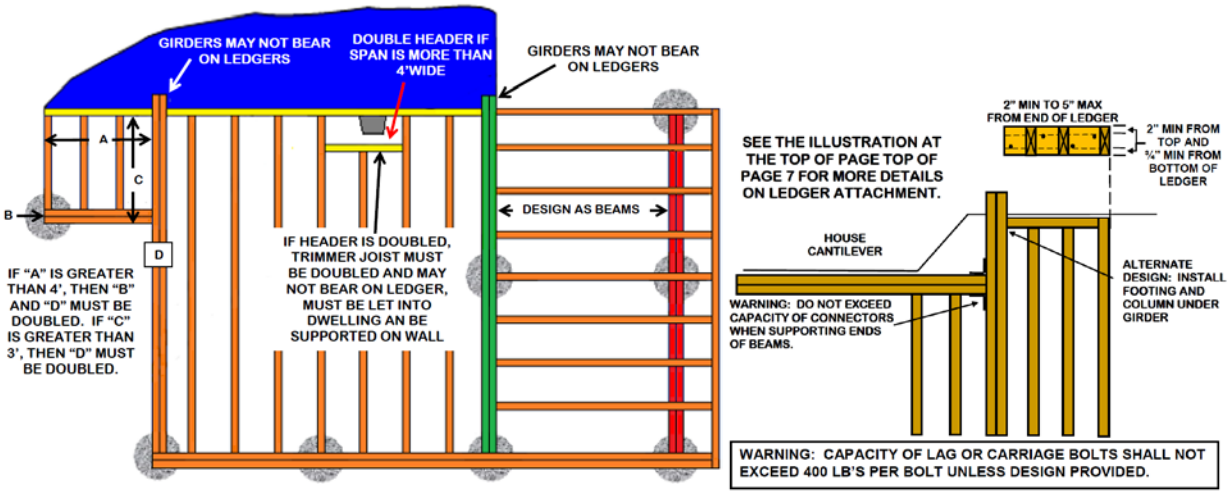

STAIRS

Stairs must have a maximum rise of $7^3/_4$ inches and a minimum run of 10 inches measured as shown. The greatest riser height within any flight of stairs shall not exceed the smallest by more than ⅜ inch. The greatest tread depth within any flight of stairs shall not exceed the smallest by more than ⅜ inch. **Open risers are permitted provided that a 4" diameter sphere will not pass between the treads.**

Stairs must be a minimum of 36 inches wide above the handrail and 31½ inches below the handrail.

STAIR TERMINOLOGY

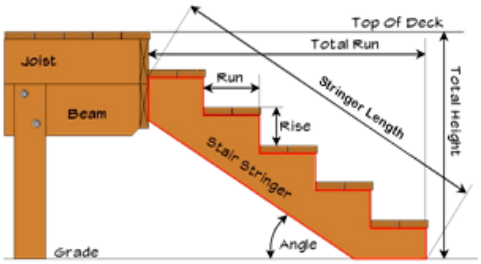

Stair Basics

- The maximum riser height is 7 ¾ inches
- The minimum tread run is 10 inches
- Treads and risers should be approximately equal with the largest not exceeding the smallest by more than ⅜ inch.

DETERMINING RISE/RUN

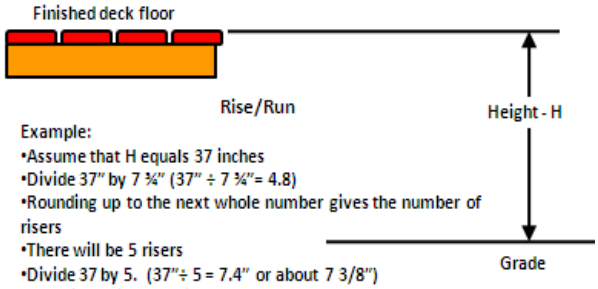

Example:

- Assume that H equals 37 inches
- Divide 37" by 7 ¾" (37" ÷ 7 ¾"= 4.8)
- Rounding up to the next whole number gives the number of risers
- There will be 5 risers
- Divide 37 by 5. (37"÷ 5 = 7.4" or about 7 3/8")
- Each riser will be 7 3/8"
- For 5 risers there will be 4 treads
- Since each tread must be at least 10", the length of the stair from the face of the deck to the face of the bottom riser will be at least 40" (10" X 4 treads = 40")

LAYING OUT STAIR JACKS

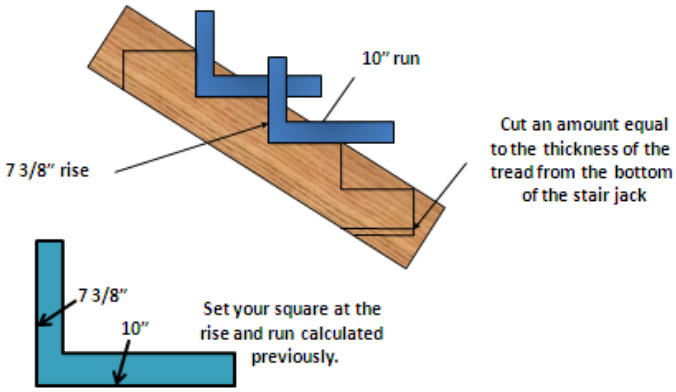

THE COMPLETED STAIR

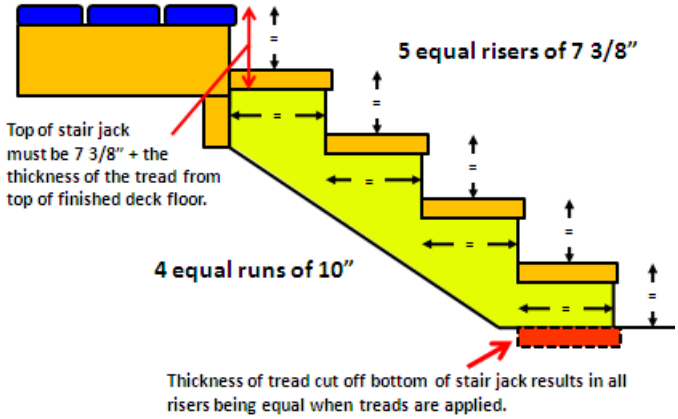

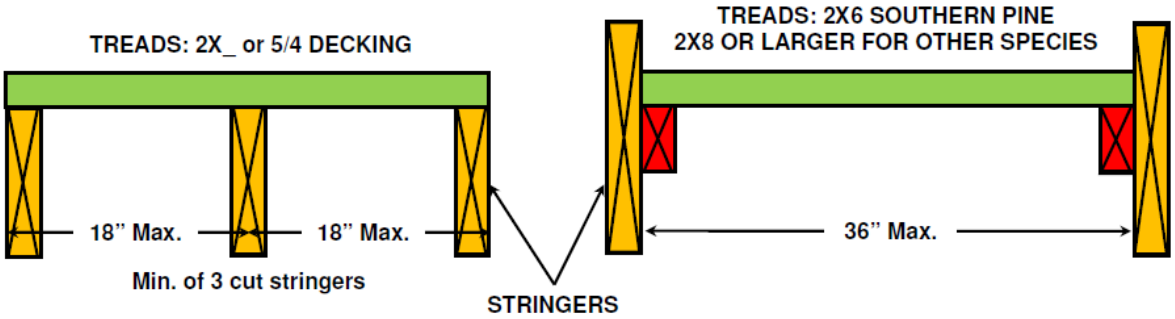

STAIR ATTACHMENTS

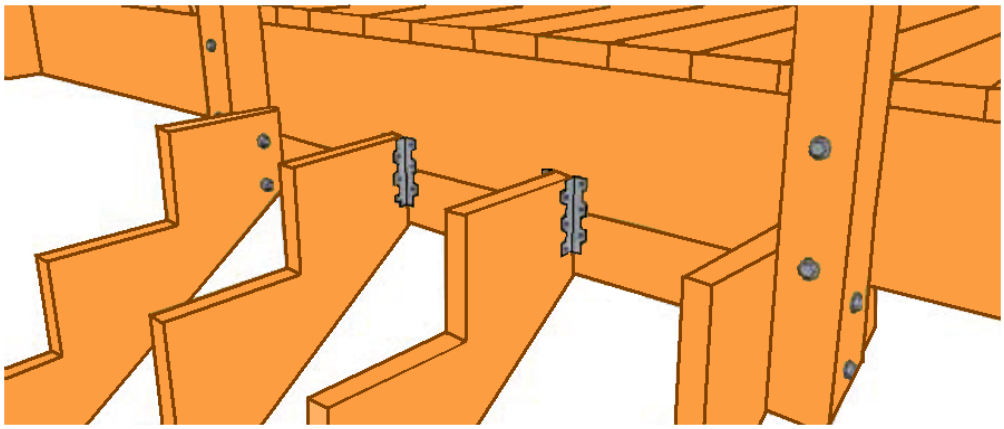

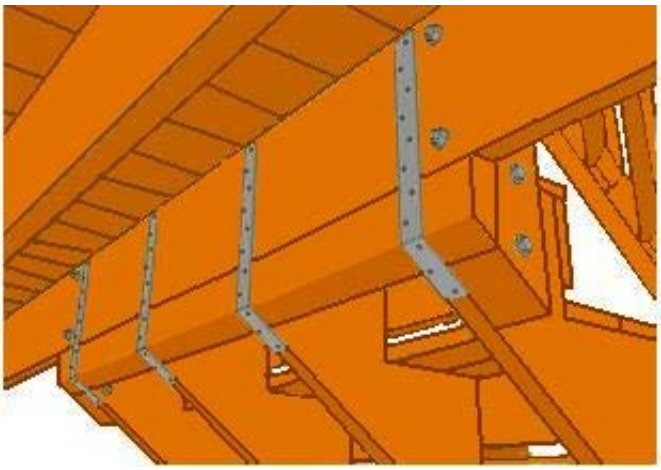

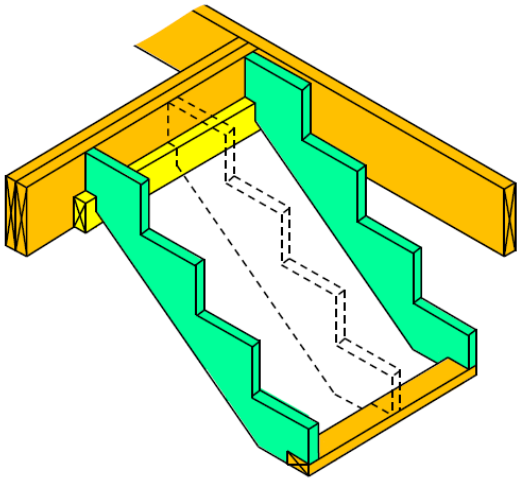

GUARDS AND HANDRAILS

Guards and handrails must be provided as shown on the following illustrations. Guards must continue down stairs where the stair is more than 30 inches above grade. The height of guards on stairs must be 34 inches minimum.

Handrails must be provided on at least one side when there are four or more risers. Handrails must have returns on each end or terminate in a newel post. **Other handrail shapes having an equivalent gripping shape may be used with prior approval of the Building Department.**

Handrails must be continuous for the entire length of the stairs and may not be interrupted by newel posts except at landings.

Hand rails and guards must be designed to support a 200 lb load applied in any direction at any point along the top of the guard or rail. **The bottoms of the stringers should rest on a sound foundation such as a gravel bed, a concrete pad, pavers, or similar.**

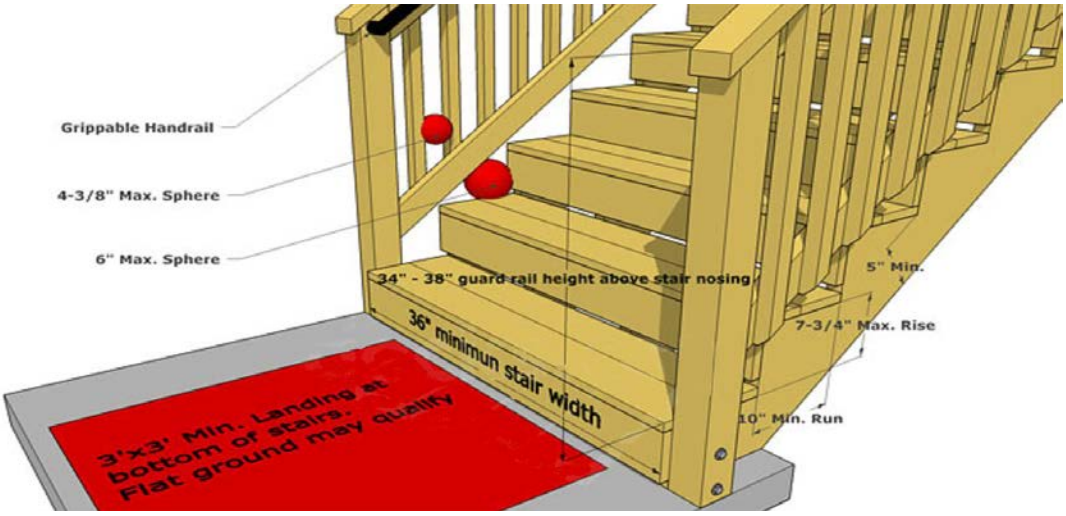
Grippable Handrail
4-3/8" Max. Sphere
6" Max. Sphere
34" - 38" guard rail height above stair nosing
36" minimun stair width
3'x3' Min. Landing at bottom of stairs. Flat ground may qualify
5" Min.
7-3/4" Max. Rise
10" Min. Run

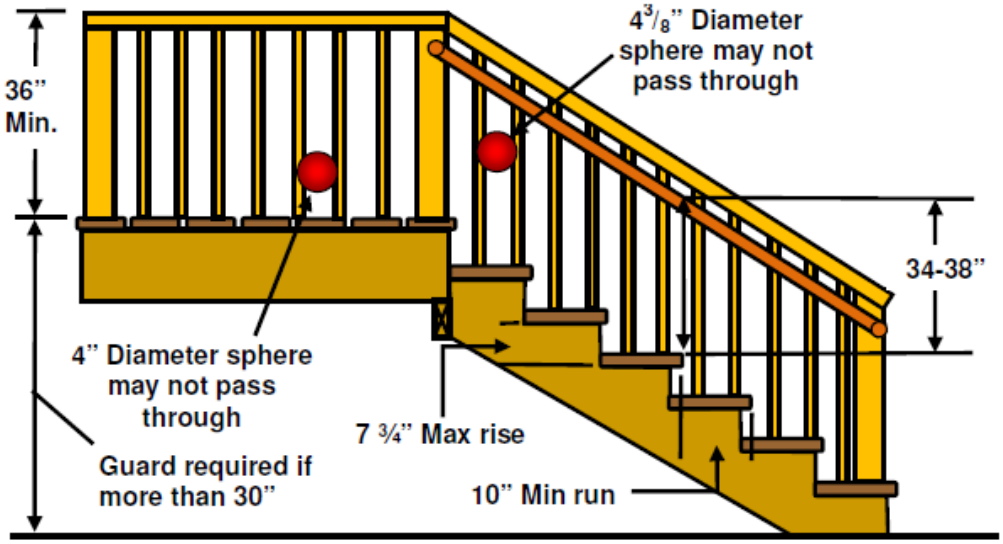
36" Min.
4 3/8" Diameter sphere may not pass through
34-38"
4" Diameter sphere may not pass through
7 ¾" Max rise
Guard required if more than 30"
10" Min run

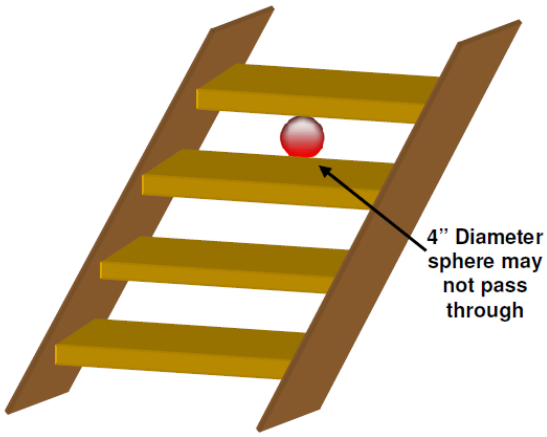
4" Diameter sphere may not pass through

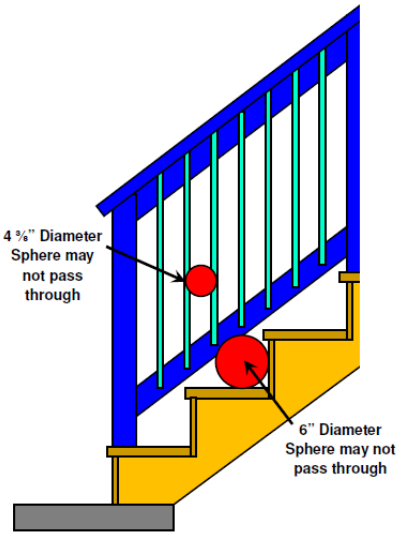
4 ⅝" Diameter Sphere may not pass through
6" Diameter Sphere may not pass through

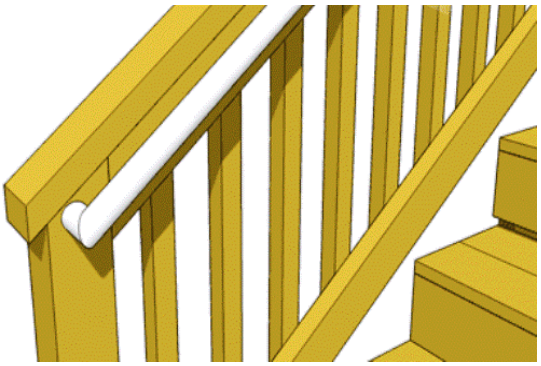

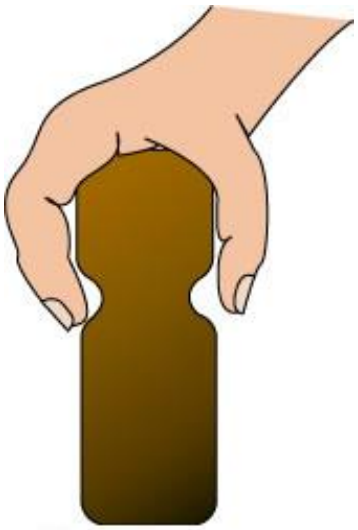

HANDRAILS MUST RETURN TO A NEWEL POST AND BE CONTINUOUS WITHOUT INTERUPTION FOR THE LENGTH OF THE FLIGHT

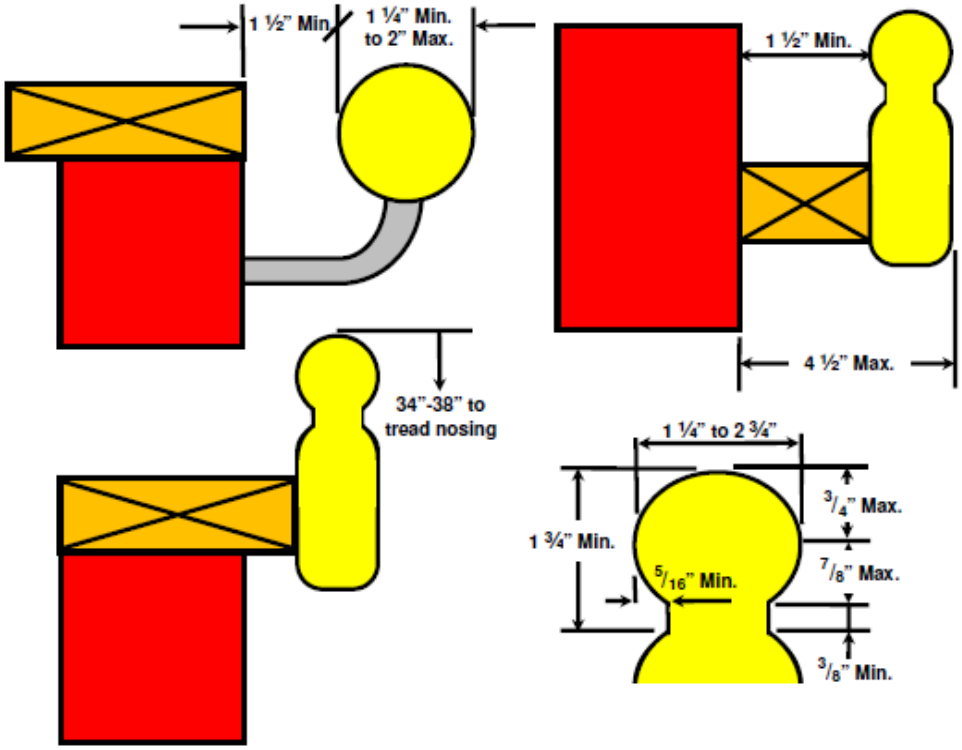

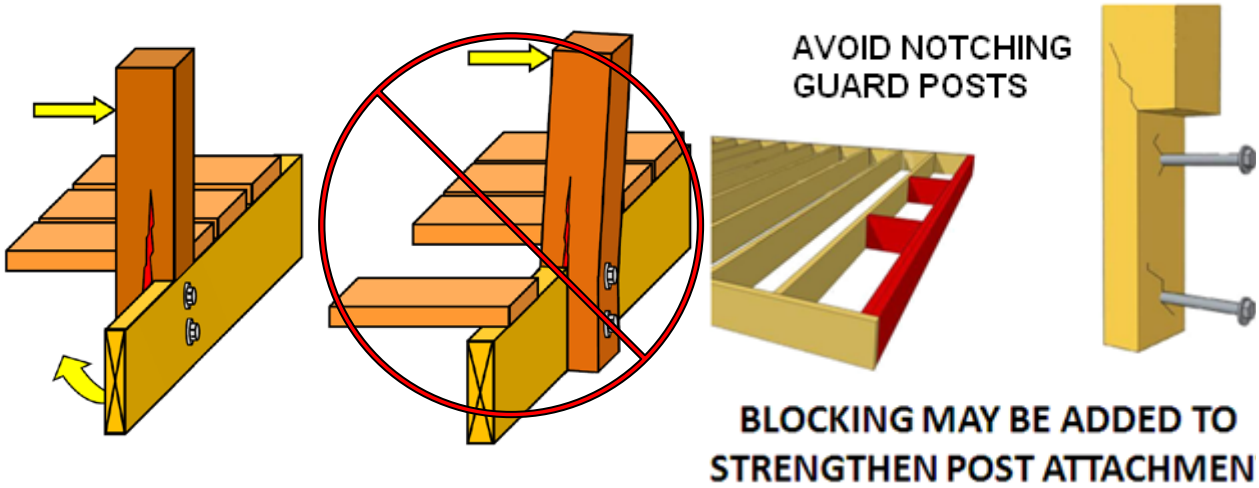

BLOCKING MAY BE ADDED TO STRENGTHEN POST ATTACHMEN

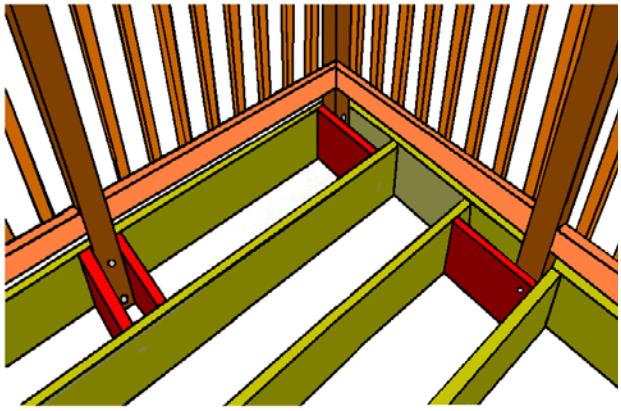
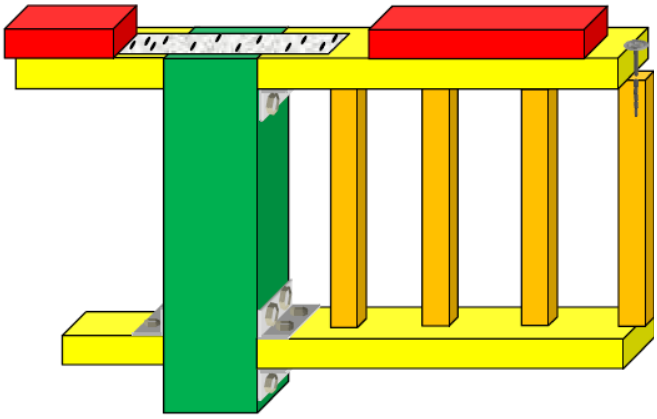
Examples of Devices that can be used to resist horizontal loads