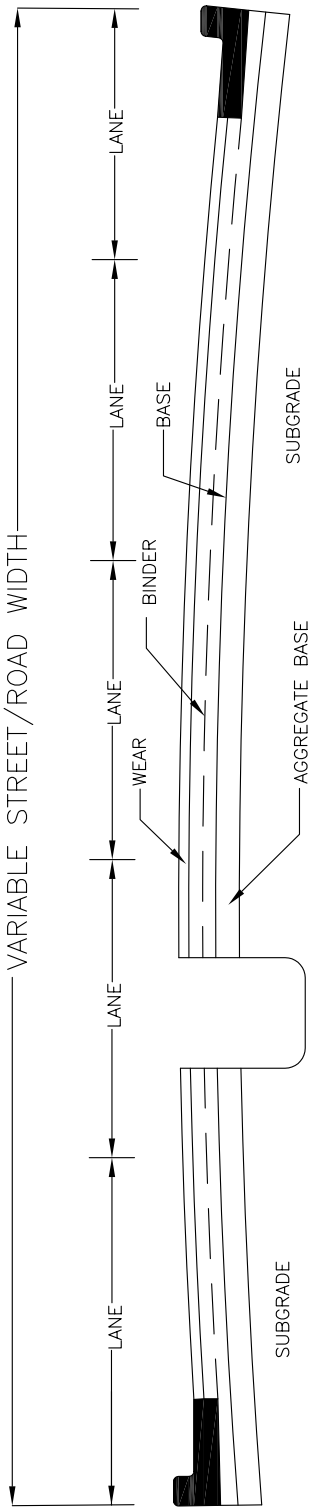

NOTE: LANE WIDTHS AND NUMBER OF LANES ARE VARIABLE

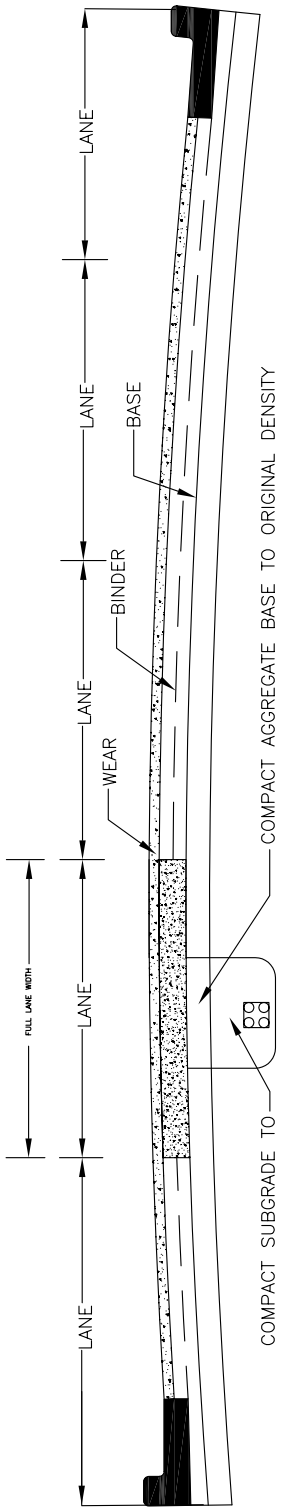

NOTE 1: BITUMINOUS PAVEMENT
- FULL LANE REPLACEMENT OF BASE AND BINDER TO THE NEAREST CONSTRUCTION JOINT OR TRANSVERSE CRACK
- FULL STREET WIDTH MILL AND OVERLAY OF WEARING COURSE

NOTE 2: CONCRETE PAVEMENT
- FULL PANEL REPLACEMENT FOR CONCRETE PAVEMENT

NOTE 3: ALL OTHER TYPES OF SURFACES AND PAVEMENTS
- REPLACEMENT WITH IN-KIND MATERIALS

DESIGN:		DATE: 12-06			
DRAWN: JEJ		FILENAME:P:WORKS\CAD\PLATES\ROW			
REVISIONS					

CITY OF MAPLEWOOD-ENGINEERING DEPT.

TRENCH RESTORATION

TYPICAL PAVEMENT 0 TO 5 YEARS OLD

PLATE NO. 1

P:\WORKS\CAD\PLATES\dwg\ROW.dwg 3/27/2006 10:29:37 AM CST

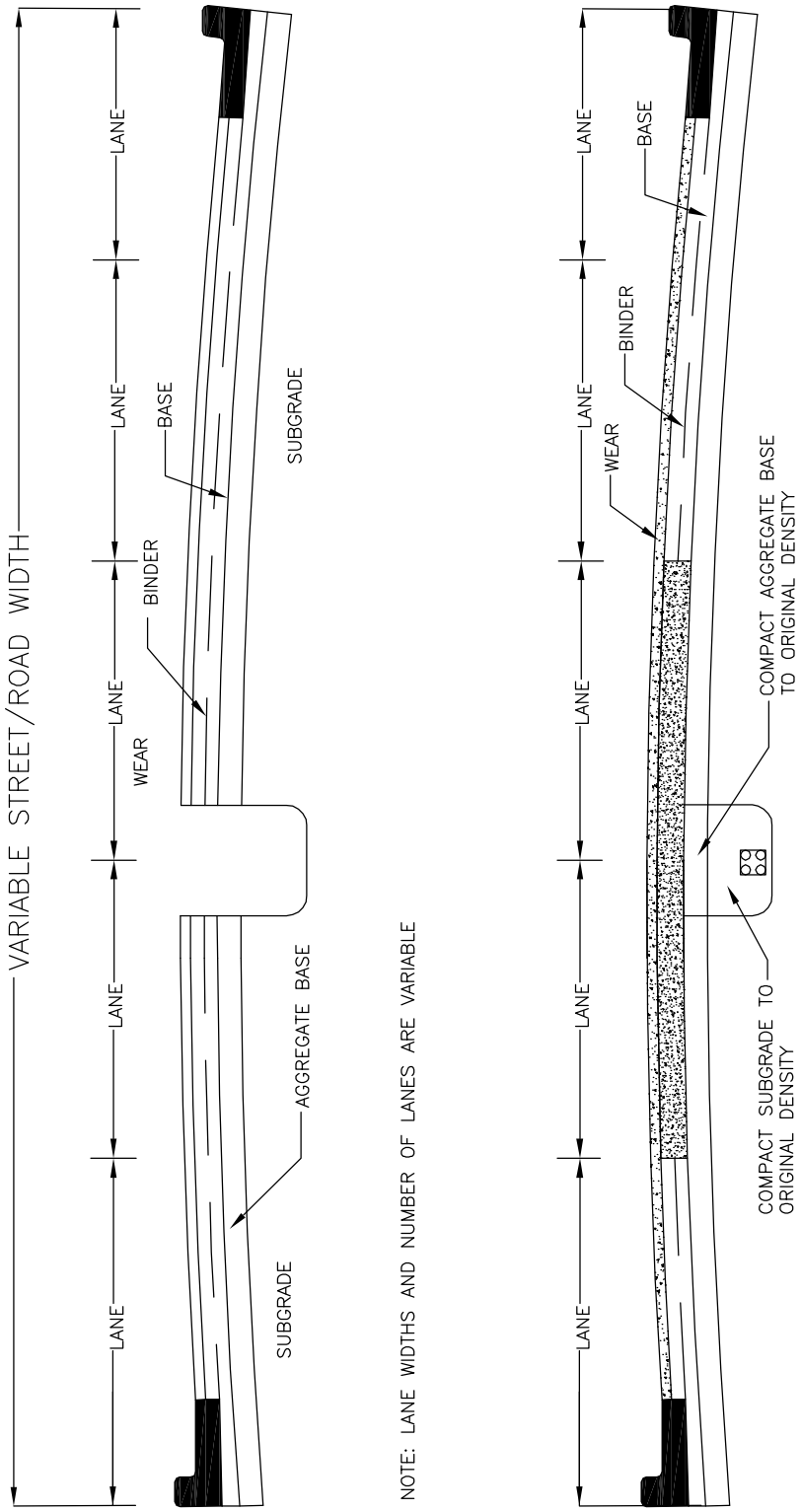

NOTE: LANE WIDTHS AND NUMBER OF LANES ARE VARIABLE

NOTE 1: BITUMINOUS PAVEMENT
- TWO LANE REPLACEMENT OF BASE AND BINDER TO THE NEAREST CONSTRUCTION JOINT OR TRANSVERSE CRACK
- FULL STREET WIDTH MILL AND OVERLAY OF WEARING COURSE

NOTE 2: CONCRETE PAVEMENT
- FULL PANEL REPLACEMENT FOR CONCRETE PAVEMENT

NOTE 3: ALL OTHER TYPES OF SURFACES AND PAVEMENTS
- REPLACEMENT WITH IN-KIND MATERIALS

DESIGN:		DATE: 12-06			
DRAWN: JEJ		FILENAME:P:WORKS\CAD\PLATES\ROW			
REVISIONS					

CITY OF MAPLEWOOD-ENGINEERING DEPT.

TRENCH RESTORATION

TYPICAL PAVEMENT 0 TO 5 YEARS OLD

PLATE NO. 2

P:\WORKS\CAD\PLATES\dwg\ROW.dwg 3/27/2006 10:29:37 AM CST

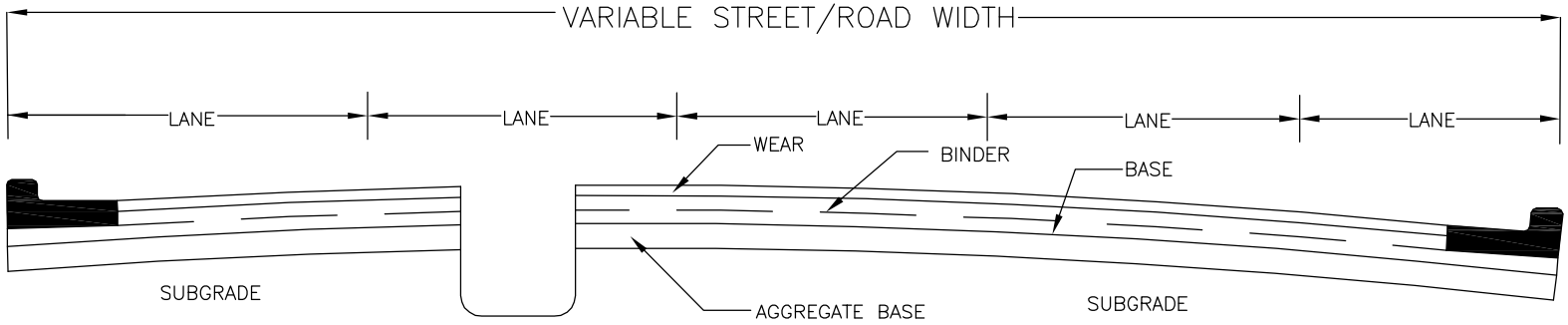

NOTE: LANE WIDTHS AND NUMBER OF LANES ARE VARIABLE

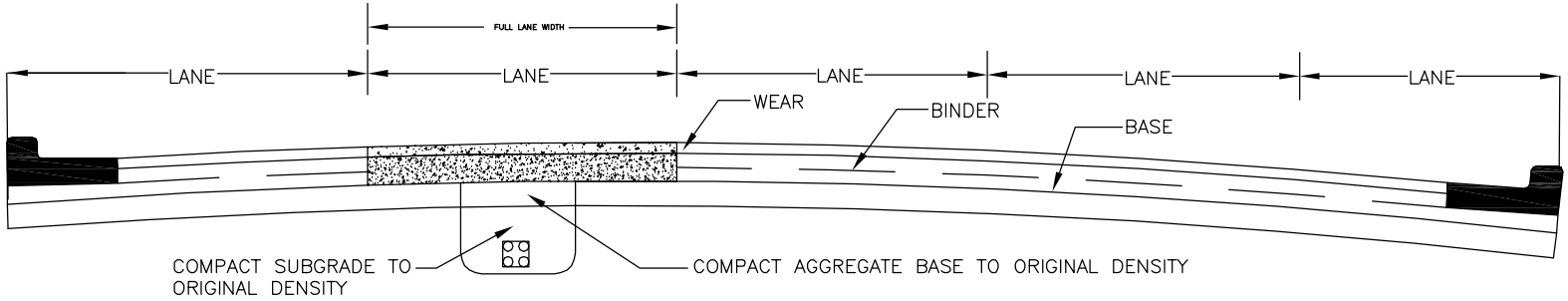

NOTE 1: BITUMINOUS PAVEMENT
- FULL LANE REPLACEMENT OF BASE, BINDER AND WEARING COURSE TO THE NEAREST CONSTRUCTION JOINT OR TRANSVERSE CRACK

NOTE 2: CONCRETE PAVEMENT
- FULL PANEL REPLACEMENT FOR CONCRETE PAVEMENT

NOTE 3: ALL OTHER TYPES OF SURFACES AND PAVEMENTS
- REPLACEMENT WITH IN-KIND MATERIALS

DESIGN:
DRAWN: JEJ
DATE: 12-06
FILENAME:P:\WORKS\CAD\PLATES\ROW
REVISIONS

CITY OF MAPLEWOOD-ENGINEERING DEPT.

TRENCH RESTORATION

TYPICAL PAVEMENT

5 YEARS OLD TO 5 YEAR CIP

PLATE NO. 3

P:\WORKS\CAD\PLATES\dwg\ROW.dwg 3/27/2006 10:29:37 AM CST

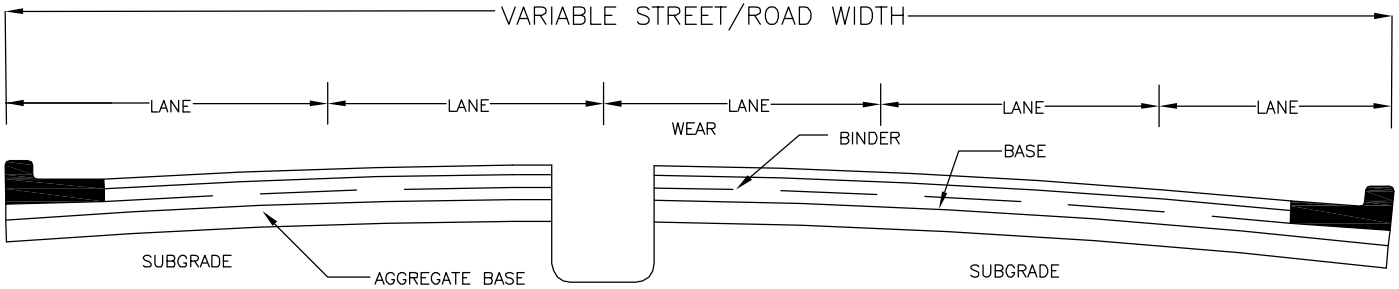

NOTE: LANE WIDTHS AND NUMBER OF LANES ARE VARIABLE

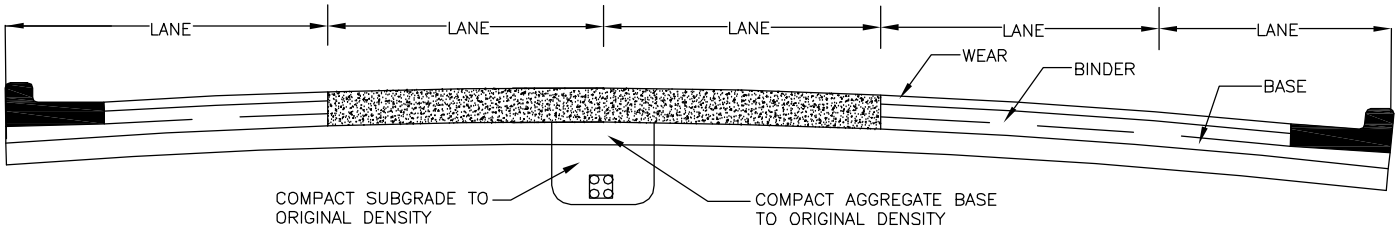

NOTE 1: BITUMINOUS PAVEMENT
- TWO LANE REPLACEMENT OF BASE, BINDER AND WEARING COURSE TO THE NEAREST CONSTRUCTION JOINT OR TRANSVERSE CRACK

NOTE 2: CONCRETE PAVEMENT
- FULL PANEL REPLACEMENT FOR CONCRETE PAVEMENT

NOTE 3: ALL OTHER TYPES OF SURFACES AND PAVEMENTS
- REPLACEMENT WITH IN-KIND MATERIALS

DESIGN:
DRAWN: JEJ
DATE: 12-06
FILENAME:P:\WORKS\CAD\PLATES\ROW
REVISIONS

CITY OF MAPLEWOOD-ENGINEERING DEPT.

TRENCH RESTORATION

TYPICAL PAVEMENT

5 YEARS OLD TO 5 YEAR CIP

PLATE NO. 4

P:\WORKS\CAD\PLATES\dwg\ROW.dwg 3/27/2006 10:29:37 AM CST

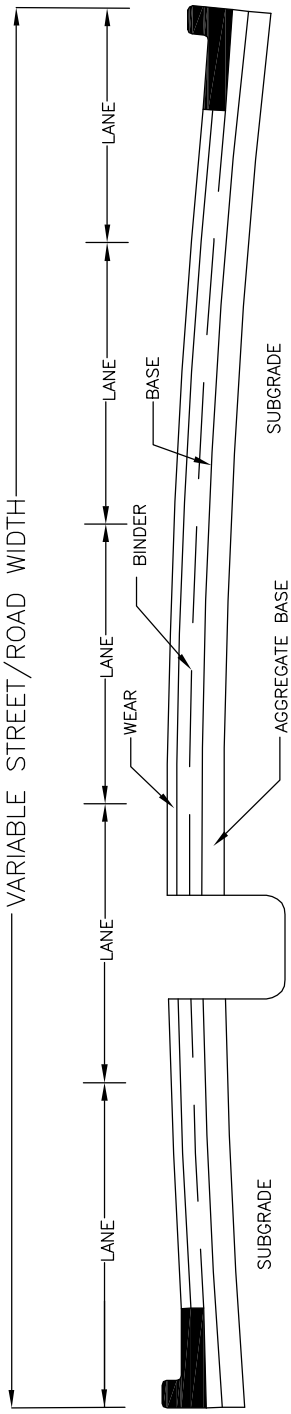

NOTE: LANE WIDTHS AND NUMBER OF LANES ARE VARIABLE

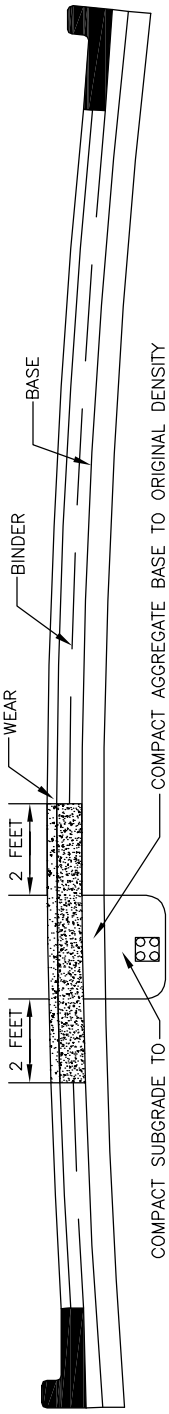

NOTE 1: BITUMINOUS PAVEMENT
- REPLACE BASE, BINDER AND WEARING COURSE FOR TRENCH WIDTH PLUS 2 FEET ON EITHER SIDE OF CUT

NOTE 2: CONCRETE PAVEMENT
- REPLACE TRENCH WIDTH PLUS 2 FEET ON EITHER SIDE OF CUT

NOTE 3: ALL OTHER TYPES OF SURFACES AND PAVEMENTS
- REPLACE TRENCH WIDTH PLUS 2 FEET ON EITHER SIDE OF CUT

DESIGN:		DATE: 12-06		
DRAWN: JEJ		FILENAME:P:WORKS\CAD\PLATES\ROW		
REVISIONS				

CITY OF MAPLEWOOD-ENGINEERING DEPT.

TRENCH RESTORATION IN 5 YEAR CIP OR UTILITY TRENCH PATCH

PLATE NO. 5

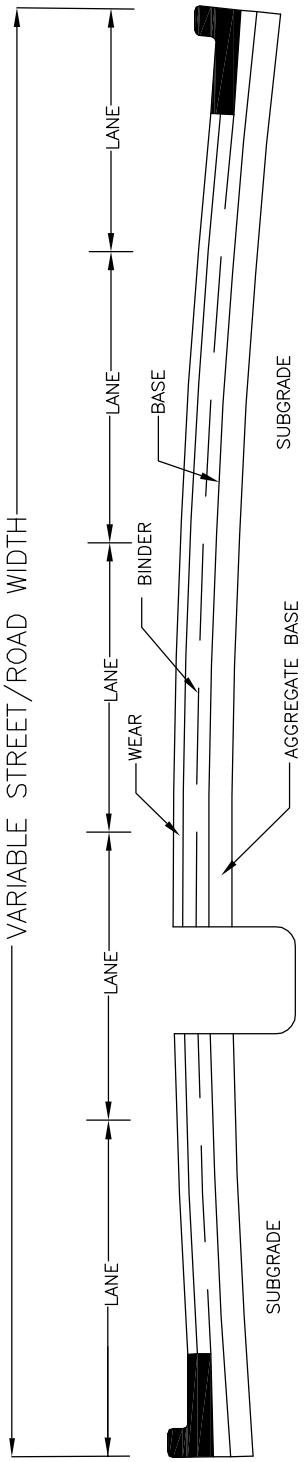

NOTE: LANE WIDTHS AND NUMBER OF LANES ARE VARIABLE

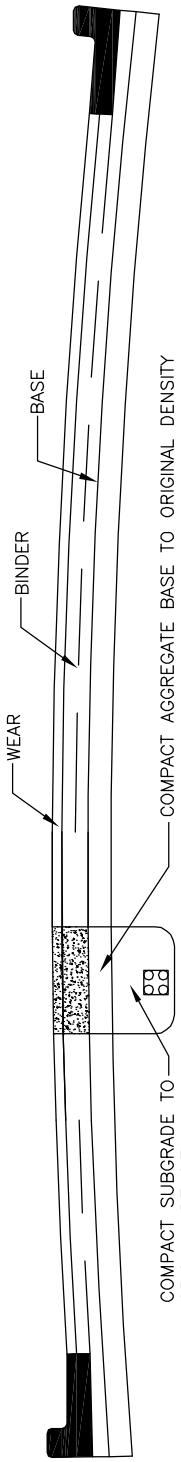

NOTE 1: BITUMINOUS PAVEMENT
- REPLACE BASE, BINDER AND WEARING COURSE FOR TRENCH WIDTH ONLY

NOTE 2: CONCRETE PAVEMENT
- REPLACE TRENCH WIDTH ONLY

NOTE 3: ALL OTHER TYPES OF SURFACES AND PAVEMENTS
- REPLACE WITH IN-KIND MATERIALS FOR TRENCH WIDTH ONLY

DESIGN:	DATE: 12-06	CITY OF MAPLEWOOD-ENGINEERING DEPT.	PLATE NO.
DRAWN: JEJ	FILENAME:P:WORKS\CAD\PLATES\ROW	TRENCH RESTORATION TYPICAL PAVEMENT IN 2 YEAR CIP OR TEMPORARY SURFACE	6
REVISIONS			

TYPICAL HOLE EXCAVATION

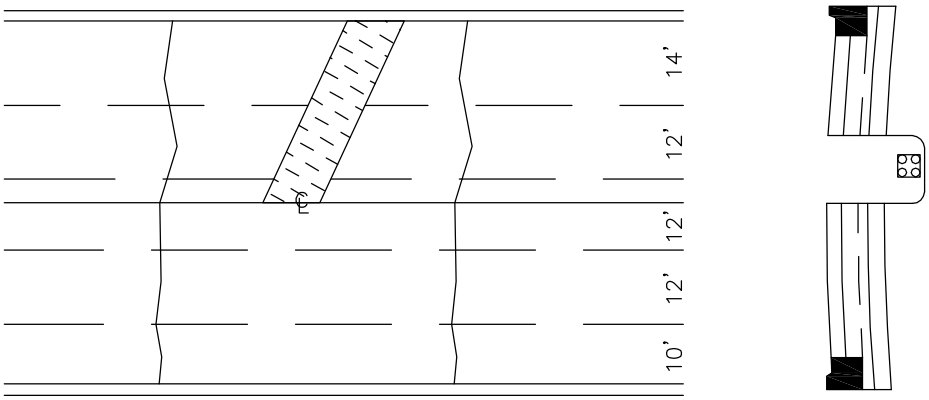

TYPICAL RESTORATION

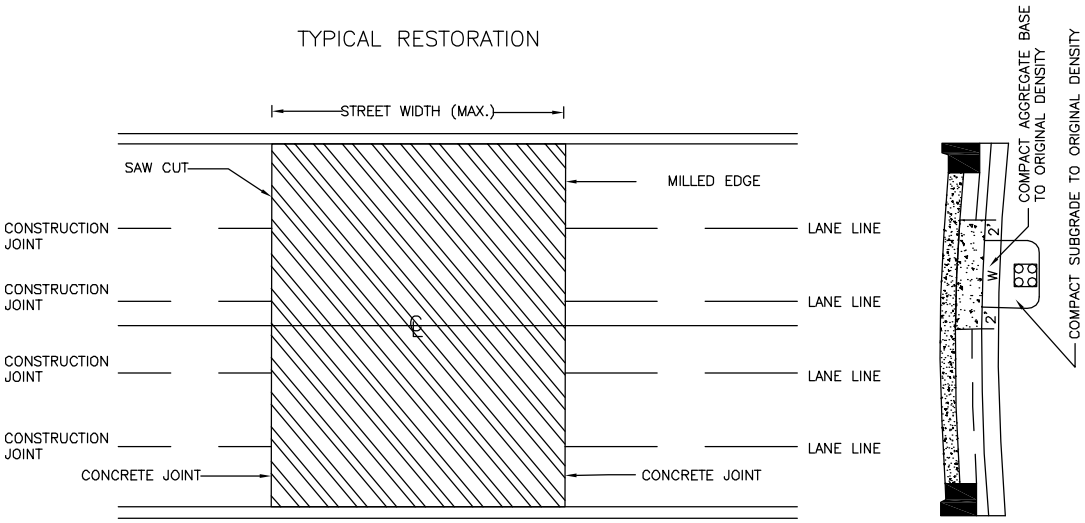

NOTE 1: BITUMINOUS PAVEMENT

- FULL LANE REPLACEMENT OF BASE AND BINDER TO THE NEAREST CONSTRUCTION JOINT OR TRANSVERSE CRACK
- FULL STREET WIDTH MILL AND OVERLAY OF WEARING COURSE

NOTE 2: CONCRETE PAVEMENT

- FULL PANEL REPLACEMENT FOR CONCRETE PAVEMENT

NOTE 3: ALL OTHER TYPES OF SURFACES AND PAVEMENTS REPLACEMENT WITH IN-KIND MATERIALS

DESIGN:		DATE: 12-06		CITY OF MAPLEWOOD-ENGINEERING DEPT.	PLATE NO.
DRAWN: JEJ		FILENAME:P:WORKS\CAD\PLATES\ROW		HOLE RESTORATION TYPICAL PAVEMENT 0 TO 5 YEARS OLD	7
REVISIONS					

P:\WORKS\CAD\PLATES\dwg\ROW.dwg 3/27/2006 10:29:37 AM CST

TYPICAL HOLE EXCAVATION

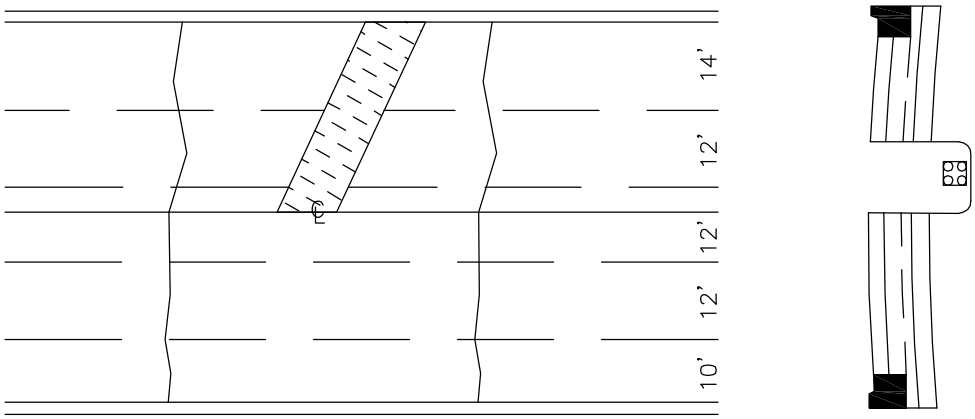

TYPICAL RESTORATION

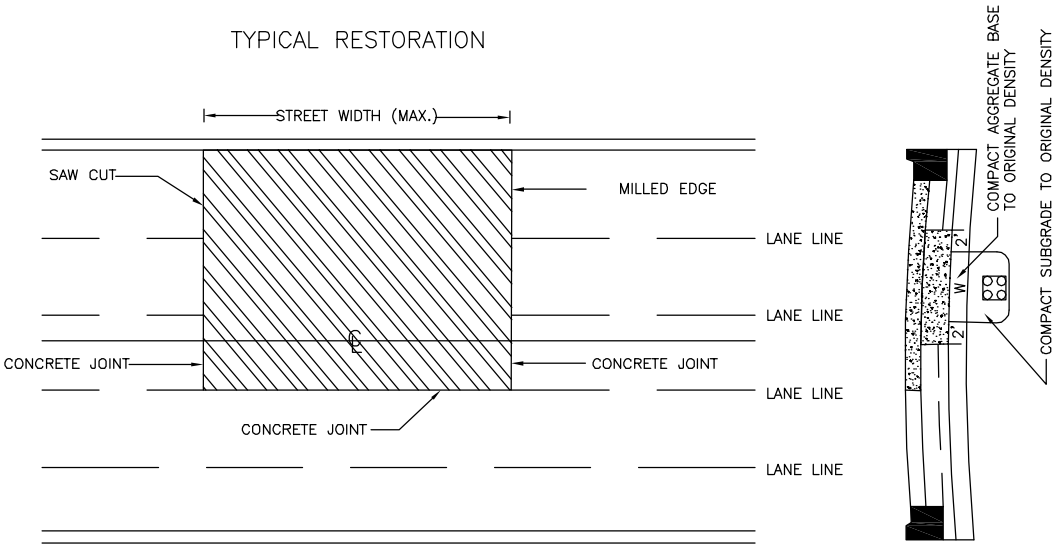

NOTE 1: BITUMINOUS PAVEMENT
- FULL LANE REPLACEMENT OF BASE, BINDER, AND WEAR COURSE TO THE NEAREST CONSTRUCTION JOINT OR TRANSVERSE CRACK

NOTE 2: CONCRETE PAVEMENT
- FULL PANEL REPLACEMENT FOR CONCRETE PAVEMENT

NOTE 3: ALL OTHER TYPES OF SURFACES AND PAVEMENTS
- REPLACEMENT WITH IN-KIND MATERIALS

DESIGN:		DATE: 12-06			
DRAWN: JEJ		FILENAME:P:WORKS\CAD\PLATES\ROW			
REVISIONS					

CITY OF MAPLEWOOD-ENGINEERING DEPT.

HOLE RESTORATION

TYPICAL PAVEMENT
5 YEARS OLD TO 5 YEAR CIP

PLATE NO. 8

TYPICAL HOLE EXCAVATION

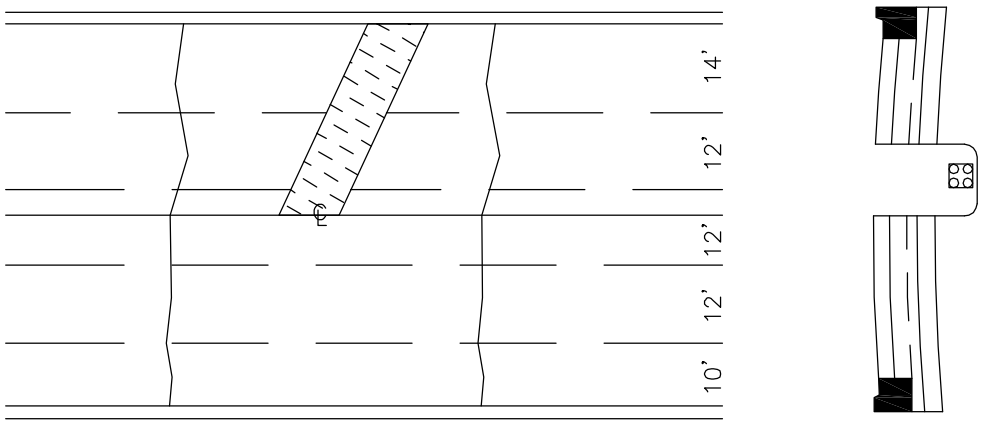

TYPICAL RESTORATION

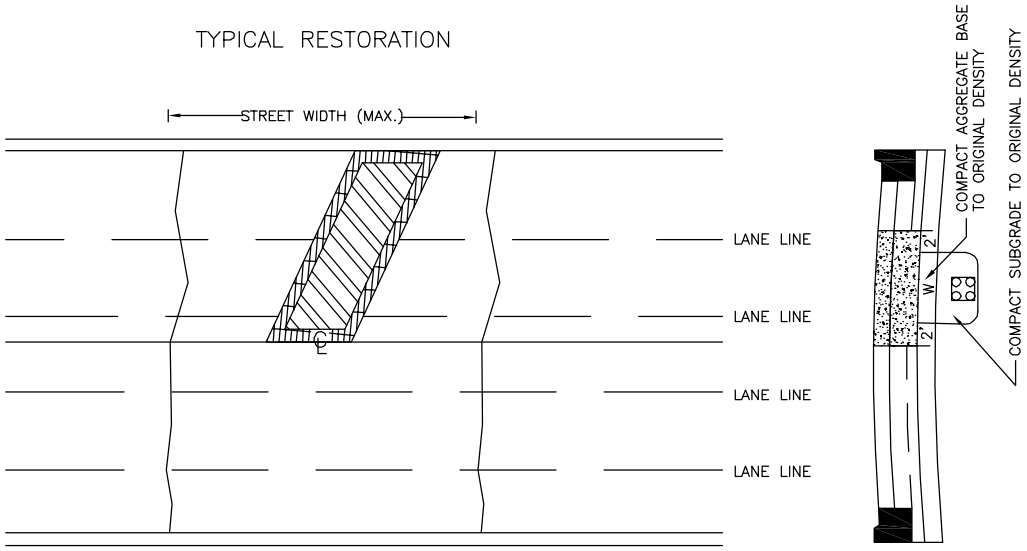

NOTE 1: BITUMINOUS PAVEMENT

- REPLACE BASE, BINDER, AND WEARING COURSE FOR WIDTH OF HOLE PLUS 2 FEET ON EITHER SIDE OF CUT

NOTE 2: CONCRETE PAVEMENT

- REPLACE WIDTH OF HOLE PLUS 2 FEET ON EITHER SIDE OF CUT

NOTE 3: ALL OTHER TYPES OF SURFACES AND PAVEMENTS

- REPLACE WIDTH OF HOLE PLUS 2 FEET ON EITHER SIDE OF CUT

DESIGN:		DATE: 12-06		CITY OF MAPLEWOOD-ENGINEERING DEPT.	PLATE NO.
DRAWN: JEJ		FILENAME:P:WORKS\CAD\PLATES\ROW		HOLE RESTORATION TYPICAL PAVEMENT IN 5 YEAR CIP OR HOLE PATCH	9
REVISIONS					

P:\WORKS\CAD\PLATES\dwg\ROW.dwg 3/27/2006 10:29:37 AM CST

TYPICAL HOLE EXCAVATION

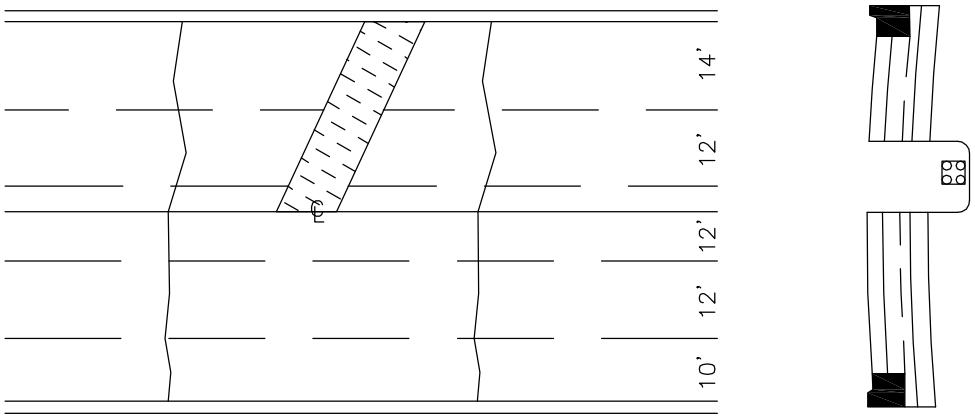

TYPICAL RESTORATION

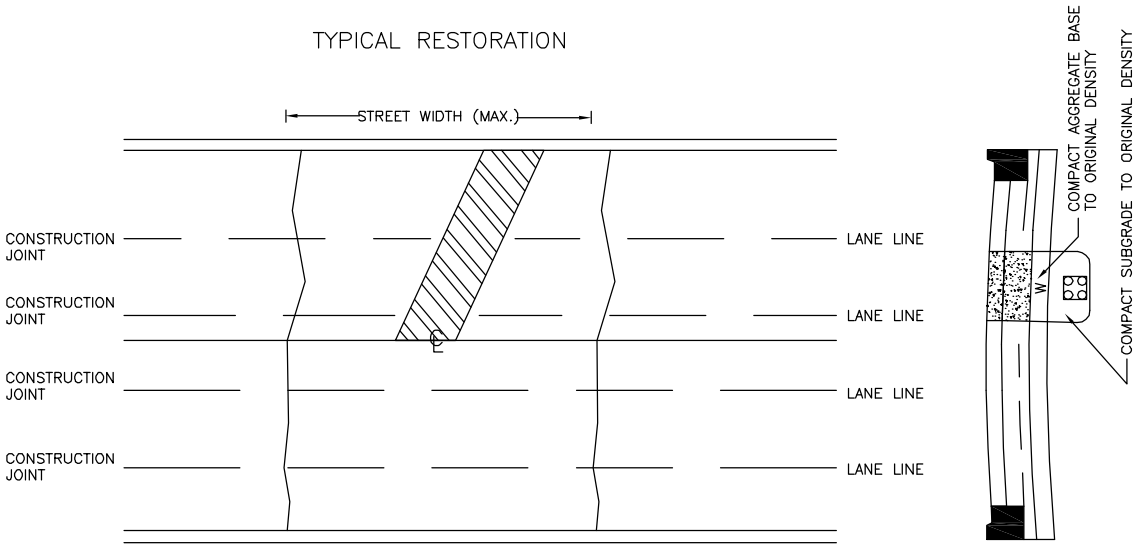

NOTE 1: BITUMINOUS PAVEMENT
- REPLACE BASE, BINDER, AND WEARING COURSE FOR WIDTH OF HOLE ONLY

NOTE 2: CONCRETE PAVEMENT
- REPLACE WIDTH OF HOLE ONLY

NOTE 3: ALL OTHER TYPES OF SURFACES AND PAVEMENTS
- REPLACEMENT WITH IN-KIND MATERIALS FOR WIDTH OF HOLE ONLY

DESIGN:		DATE: 12-06		CITY OF MAPLEWOOD-ENGINEERING DEPT.	PLATE NO.
DRAWN: JEJ		FILENAME:P:WORKS\CAD\PLATES\ROW		HOLE RESTORATION TYPICAL PAVEMENT IN 2 YEAR CIP OR TEMPORARY SURFACE	10
REVISIONS					

P:\WORKS\CAD\PLATES\dwg\ROW.dwg 3/27/2006 10:29:37 AM CST

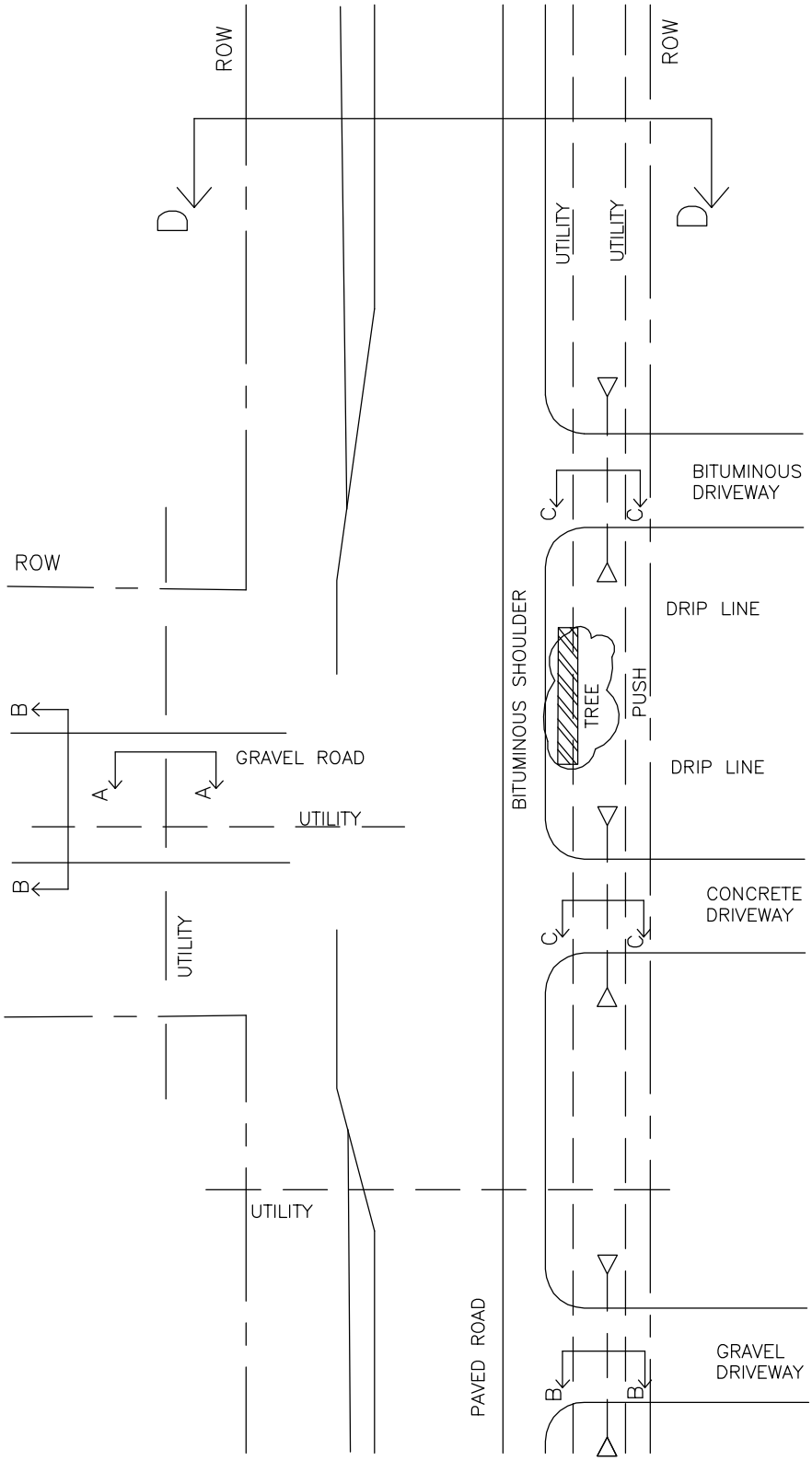

NOTE: ALL UTILITY LINES MUST BE PUSHED UNDER ROADS, SHOULDERS, AND DRIVEWAYS UNLESS OTHER CONSTRUCTION METHODS ARE APPROVED BY THE LOCAL GOVERNMENT UNIT

DESIGN:		DATE: 12-06		CITY OF MAPLEWOOD-ENGINEERING DEPT.	PLATE NO.
DRAWN: JEJ		FILENAME:P:WORKS\CAD\PLATES\ROW		TYPICAL ROAD PLAN	11
REVISIONS					

P:\WORKS\CAD\PLATES\dwg\ROW.dwg 3/27/2006 10:29:37 AM CST

SECTION A–A
RESTORE GRAVEL SURFACE
TRENCH

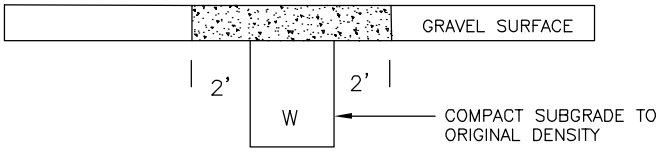

SECTION A–A
RESTORE GRAVEL SURFACE
PLOW

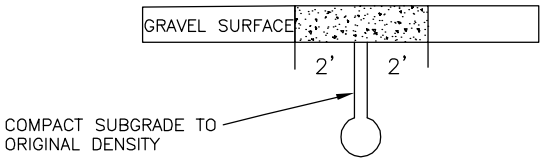

SECTION B–B
RESTORE GRAVEL SURFACE
(PLOW OR TRENCH)

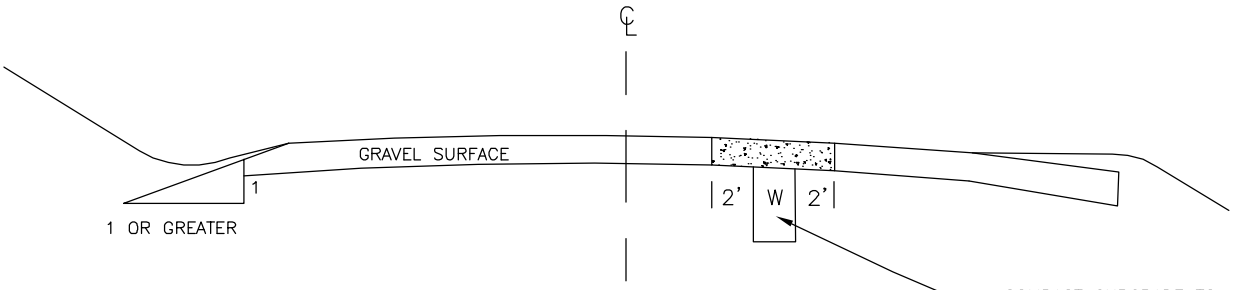

SECTION C–C

FULL PANEL RESTORATION: CONCRETE OR BITUMINOUS DRIVEWAY, SIDEWALK, OR PATH

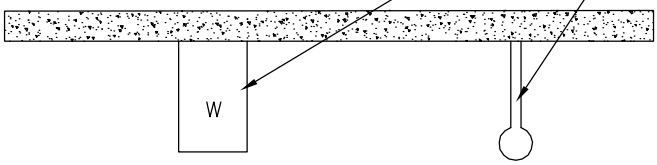

NOTE: RESTORE ALL SURFACES TO ORIGINAL CONDITION WITH
IN–KIND MATERIALS (IMPORTED OR FOUND ON SITE)

DESIGN:		DATE: 12–06		
DRAWN: JEJ		FILENAME:P:WORKS\CAD\PLATES\ROW		
REVISIONS				

CITY OF MAPLEWOOD–ENGINEERING DEPT.

TYPICAL ROAD, DRIVEWAY,
OR PATH RESTORATION

PLATE NO.

12

TRENCH INSTALLATION

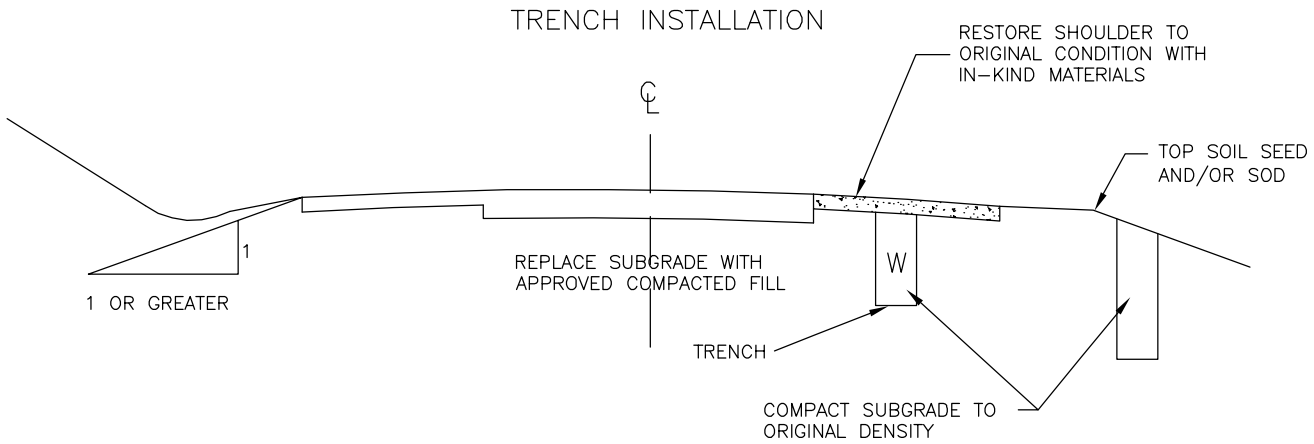

PLOW INSTALLATION

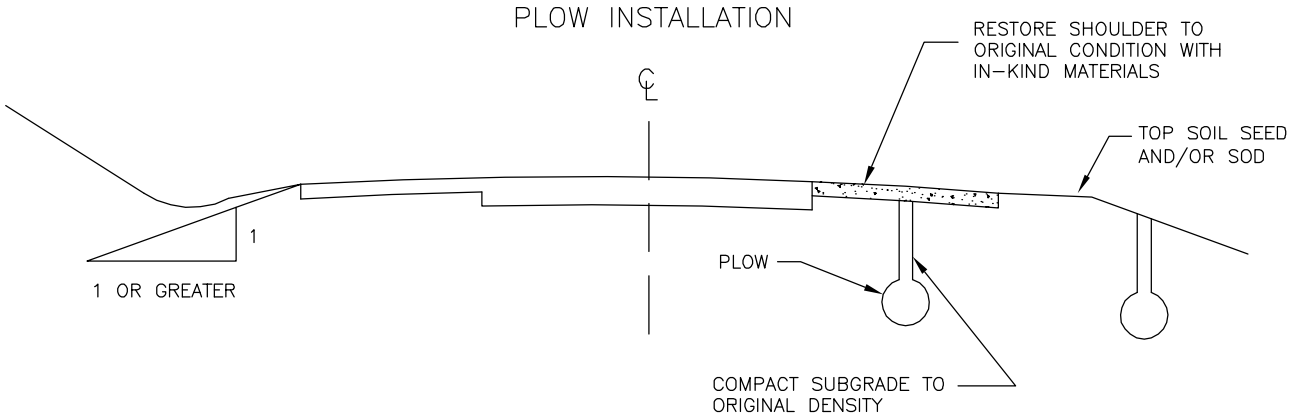

NOTE: RESTORE ALL SURFACES TO ORIGINAL CONDITION WITH IN-KIND MATERIALS (IMPORTED OR FOUND ON SITE)

DESIGN:		DATE: 12-06			
DRAWN: JEJ		FILENAME:P:WORKS\CAD\PLATES\ROW			
REVISIONS					

CITY OF MAPLEWOOD-ENGINEERING DEPT.

TYPICAL ROAD SHOULDER RESTORATION SECTION D-D

PLATE NO. 13

P:\WORKS\CAD\PLATES\dwg\ROW.dwg 3/27/2006 10:29:37 AM CST